MURRAY
SELECT

This Instruction Book contains information for several models. Read and keep this book for future reference. This book contains important information on *SAFETY, PREPARATION, OPERATION, AND MAINTENANCE.*

MODEL

405000x8E

PRODUCT INFORMATION

The owner must be certain that all the product information is included with the unit. This information includes the INSTRUCTION BOOKS, the REPLACEMENT PARTS and the WARRANTIES. This information must be included to make sure state laws and other laws are followed.

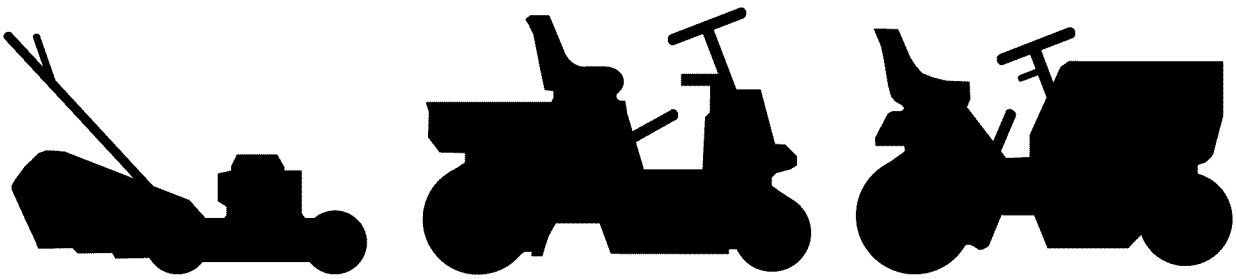

RECORD THE FOLLOWING INFORMATION ABOUT YOUR UNIT. THIS INFORMATION IS NECESSARY WHEN ORDERING PARTS OR IN CASE OF LOSS OR THEFT.

WHERE PURCHASED:_____.

DATE PURCHASED: Month_____Day_____Year_____.

MODEL NO.:_____**DATE OF MANUFACTURE:**_____.

F-050700L

TABLE OF CONTENTS

WARRANTY 2
RESPONSIBILITY OF THE OWNER 3
SAFETY RULES 3
INTERNATIONAL PICTORIALS 9
ASSEMBLY 10
PARTS BAG - CONTENTS 10
HOW TO INSTALL THE SEAT 11
HOW TO ASSEMBLE THE STEERING WHEEL 11
MAINTENANCE FREE BATTERY 12
HOW TO INSTALL THE BATTERY CABLES 12
IMPORTANT! BEFORE YOU START MOWING 13
HOW TO PREPARE THE ENGINE 13
CHECK THE LEVEL OF THE MOWER HOUSING 13
CHECK THE TIRES 13
OPERATION 14
LOCATION OF CONTROLS 14
ATTACHMENTS 15
ELECTRICAL SAFETY SYSTEM 15
HOW TO OPERATE THE IGNITION KEY SWITCH 15
HOW TO USE THE THROTTLE CONTROL 15
HOW TO USE THE BLADE ROTATION CONTROL 16
HOW TO USE THE SHIFT LEVER 16
HOW TO SET THE PARKING BRAKE 17
HOW TO CHANGE THE CUTTING HEIGHT 17
HOW TO STOP THE UNIT 17
HOW TO TRANSPORT THE UNIT 17
HOW TO OPERATE WITH THE MOWER HOUSING 18
HOW TO OPERATE THE UNIT ON HILLS 18
BEFORE STARTING THE ENGINE 19
HOW TO START THE ENGINE 19
OPERATING TIPS 20
MOWING AND BAGGING TIPS 20
MAINTENANCE 21
MAINTENANCE CHART 21
HOW TO CHECK THE MUFFLER 21
HOW TO REMOVE AND INSTALL THE BLADE 22
HOW TO SHARPEN THE BLADE 22
HOW TO ADJUST THE BLADE ROTATION CONTROL 23
HOW TO CHECK AND ADJUST THE DRIVE BRAKE 24
HOW TO CHECK AND ADJUST THE CLUTCH 24
HOW TO ADJUST THE SHIFT LEVER 25
MAINTENANCE FREE BATTERY 25
HOW TO CHARGE THE BATTERY 25
WHERE TO LUBRICATE 26
HOW TO CHECK THE FUEL FILTER 26
CHECK THE TIRES 26
HOW TO REMOVE THE MOWER HOUSING 27
HOW TO INSTALL THE MOWER HOUSING 27
HOW TO LEVEL THE MOWER HOUSING 28
HOW TO REPLACE THE MOTION DRIVE BELT 29
HOW TO REPLACE THE MOWER DRIVE BELT 31
HOW TO INSTALL THE WHEELS 32
HOW TO REPLACE THE FUSE 33
HOW TO REPLACE THE LIGHT BULB 33
HOW TO CLEAN THE MOWER HOUSING 33
STORAGE (OVER 30 DAYS) 33
TROUBLE SHOOTING CHART 34
HOW TO ORDER REPAIR PARTS 35
PARTS LIST 36
SLOPE GUIDE 50
INDEX 51
LAWN TRACTOR ACCESSORIES 52

MURRAY, INC. Two Year Limited Warranty

Murray, Inc. warrants to the original purchaser that this unit shall be free from defects in material and workmanship under normal use and service for a period of **Two (2) Years** from the date of purchase; however, this warranty does not cover engines, accessories (such as snow blowers, snow blades, grass baggers and plows), transmissions, batteries and Normal Wear Parts (except as noted below) or transaxles as the companies that manufacture these items furnish their own warranties and provide service through their authorized field service facilities. For additional information, see the warranties covering these particular parts. If you are uncertain whether your unit contains or is equipped with one or more of these parts, consult your dealer prior to purchase. Subject to the terms and conditions noted in this Limited Warranty, we shall, at our option, repair or replace at no cost to the original purchaser any part covered by this Limited Warranty during the applicable warranty period.

In the event the battery proves defective within ninety (90) days from the date of purchase, we will replace it without charge. If the battery proves defective after (90) days but within one hundred twenty (120) days from the date of purchase, we will replace it for a charge of one half (1/2) of the retail price of the battery in effect at the time of return.

Normal Wear Parts are defined as belts, blades, blade adapters, pneumatic tires, headlights and seat covers. These parts are warranted to be free from defects in material and workmanship as delivered with the product. Any claim for repair or replacement of Normal Wear Parts must be made within thirty (30) days of the date of purchase. No claims involving damage caused from material use, abuse or misuse will be honored.

This **Murray, Inc. Two (2) Year Limited Warranty** is your exclusive remedy; however, this warranty is void or does not apply to any unit that has been tampered with, altered, misused, abused or used for rental or other commercial and/or professional (non-homeowner) uses. Your warranty does not cover minor mechanical adjustments which are not due to any defect in material or workmanship. For assistance in making such adjustments, consult your Instruction Book.

To make a claim under this **Murray, Inc. Two (2) Year Limited Warranty**, return the unit (or if authorized in advance, the defective part) along with your proof of purchase to an Authorized Service Center near you. To locate the nearest Authorized Service Center, call the Central Parts Distributor for your area shown in the list provided with your unit or check the Yellow Page listings in your local telephone directory. If you return the entire unit, we will repair the unit. If we authorize the return of the defective part only, we will either replace or repair the part. In the case of a defect in a transmission or differential (as distinguished from a transaxle), the entire transmission or differential must be returned since they do not include user serviceable parts.

This **Murray, Inc. Two (2) Year Limited Warranty** gives you specific legal rights, and you may also have other rights which vary from state to state. **This Limited Warranty is given in lieu of all other expressed and implied warranties including the implied warranty of merchantability and warranty of fitness for a particular purpose.** If you need additional information on this written warranty or assistance in obtaining service, write or call: **MURRAY, INC.**, Outdoor Power Equipment, Customer Service Department, P.O. Box 268, Brentwood, Tennessee 37027. (1-800-251-8007)

OWNER'S INFORMATION

This instruction book is for several different models. The instructions are written for a person with some mechanical ability. Like most service books, not all the steps are described. Steps on how to loosen or tighten fasteners are steps anyone can follow with some mechanical ability. Read and follow these instructions before you use the unit.

Know your product: If you understand the unit and how the unit operates, you will get the best performance. As you read this manual, compare the illustrations to the unit. Learn the location and the function of the controls. To help prevent an accident, follow the operating instructions and the safety rules. Keep this manual for future reference.

IMPORTANT: Many units are not assembled and are sold in cartons. It is the responsibility of the owner to make sure the assembly instructions in this manual are exactly followed. Other units are purchased in an assembled condition. On assembled units, it is the responsibility of the owner to make sure the unit is correctly assembled. The owner must carefully check the unit according to the instructions in this manual before it is first used.

⚠ WARNING: ⚠

Engine Exhaust, some of its constituents, and certain vehicle components contain or emit chemicals known to the State of California to cause cancer and birth defects or other reproductive harm.

Battery posts, terminals and related accessories contain lead and lead compounds, chemicals known to the State of California to cause cancer and birth defects or other reproductive harm. WASH HANDS AFTER HANDLING.

RESPONSIBILITY OF THE OWNER

The responsibility of the owner is to follow the instructions below.

1. Carefully read and follow the rules for safe operation.
2. Follow all the assembly instructions.
3. Inspect the unit.
4. Make sure that the operator of the unit knows how to correctly use all standard and accessory equipment.
5. Operate the unit only with guards, shields, and other safety items in place and working correctly.
6. Correctly adjust the unit.
7. Service the unit only with authorized or approved replacement parts.
8. Complete all maintenance on the unit.

Environmental Awareness

- Do not fill the engine's fuel tank completely full.
- Drain fuel for off-season storage.
- Use only unleaded gasoline.
- Service the air cleaner regularly.
- Change oil regularly. Use 10W-30 oil in summer.
- Tune-up the engine regularly.
- Keep equipment in efficient operating condition.
- Dispose of used engine oil properly.

SAFETY RULES

Safe Operation Practices for Ride-on Mowers

⚠ WARNING: This cutting machine is capable of amputating hands and feet and throwing objects. Failure to observe the following safety instructions could result in serious injury or death.

I. General operation

1. Read, understand and follow all instructions in the Instruction Book, on the machine, the engine and with any attachments before starting.
2. Only allow responsible adults, who are familiar with the instructions, to operate the machine.
3. Clear the area of objects such as rocks, toys, wire, etc., which could be picked up and thrown by the blade.
4. Be sure the area is clear of other people before mowing. Stop the machine if anyone enters the area.
5. Never carry passengers.
6. Turn off power to the blades or any attachments before backing up. Do not mow in reverse unless absolutely necessary. Always look down and behind before and while backing.
7. Be aware of the mower discharge direction and do not point it at anyone. Do not operate the mower without either the entire grass bagger or the mower guard in place.
8. Slow down before turning.
9. Never leave a machine unattended with the engine running. Always turn off the blade(s), set the parking brake, stop the engine and remove the key before dismounting.
10. Turn off power to attachment(s) when transporting or not in use. Turn off the blade(s) when not mowing.
11. Stop the engine before removing the grass bagger or unclogging the chute.
12. Mow only in daylight or good artificial light.
13. Do not operate the machine while under the influence of alcohol or drugs or when very tired.
14. Watch for traffic when operating near or crossing roadways.
15. Use extra caution when loading or unloading the machine into a trailer or truck.
16. Always wear goggles, safety glasses, or an eye shield when you operate the unit to protect your eyes from foreign objects that can be thrown from the unit. Always wear eye protection when you make an adjustment or repair to the machine.
17. Use care when pulling loads or using heavy equipment.
    a. Use only approved drawbar hitch points.
    b. Limit loads to those you can safely control.

c. Do not turn sharply. Use care when backing.
d. Use counterweights or wheel weights when suggested in the Instruction Book.

18. Do not operate this machine if you are taking drugs or other medication which can cause drowsiness or affect your ability to operate this machine.
19. Do not use this machine if you are mentally or physically unable to operate this machine safely.
20. Data indicates that operators, age 60 years and above, are involved in a large percentage of riding mower related injuries. These operators should evaluate their ability to operate a riding mower safely enough to protect themselves and others from serious injury.

II. Slope operation

Slopes and rough terrain are major factors related to loss-of-control and tip-over accidents, which can result in severe injury or death. ALL slopes require extra caution. If you cannot back up the slope or if you feel uneasy on the slope, do not mow it. See the "Slope Guide" in the back of this book to check for safe operation.

DO

1. Mow up and down slopes, not across.
2. Remove obstacles such as rocks, limbs, etc...
3. Watch for holes, ruts or bumps. Uneven terrain could overturn the machine. *Tall grass can hide obstacles.*
4. Follow the manufacturer's recommendations for wheel weights or counterweights to improve stability.
5. Use extra care with grass baggers or other attachments, they can change the stability of the machine.
6. Keep all movement on the slopes **slow and gradual**. Do not make sudden changes in speed or direction.
7. Avoid starting or stopping on a slope. If tires lose traction, turn off the blades and proceed slowly ***straight*** **down** the slope.

DO NOT

1. **Do not** turn on slopes unless absolutely necessary, then only turn slowly and gradually downhill, if possible.
2. **Do not** mow drop-offs, ditches or embankments. A wheel over the edge or an edge caving in could cause a sudden overturn and an injury or death.
3. **Do not** mow on wet grass. Reduced traction could cause sliding.
4. **Do not** try to stabilize the machine by putting your foot on the ground.
5. **Do not** use a grass bagger or other rear mounted accessories on steep slopes (greater than 10 degrees).

III. Children

Tragic accidents can occur if the operator is not alert to the presence of children. Children are often attracted to the machine and the mowing activity. NEVER assume that children will remain where you last saw them.

1. Keep children out of the mowing area and in the watchful care of another responsible adult.
2. Be alert and turn the engine off if children enter the area.
3. Before and when backing, look **behind and down** for small children.
4. Never carry children or any passengers, even with the blades off. They may fall off and be seriously injured or interfere with the safe operation of the machine.
5. Never allow children to operate the machine. Instruct children in the potential dangers of the machine.
6. Use extra care when approaching blind corners, shrubs, trees or other objects that may obscure vision.

IV. Service

1. Use extra care when handling gasoline and other fuels. Fuels are flammable and the vapors are explosive.
   a. Use only an approved container.
   b. Never remove the gas cap or add fuel with the engine running. Allow the engine to cool for several minutes before refueling. Do not smoke.
   c. Never refuel the machine indoors.
   d. Never store the machine with fuel in the tank or fuel container inside where there is an open flame, such as a water heater.
2. Never start or run the engine inside a closed area.
3. Keep all nuts and bolts, especially the blade attachment nuts tight. Frequently check the blade(s) for wear or damage such as cracks and nicks. A blade that is bent or damaged must be immediately replaced with an original equipment blade from an authorized service dealer. For safety, replace the blade every two years. Keep the equipment in good condition.
4. Never tamper with the safety devices. Check their proper operation regularly.
5. To reduce fire hazards, keep the machine free of grass, leaves or other debris build-up. Clean up oil or fuel spills. Allow the machine to cool before storing.
6. Stop and inspect the equipment if you strike an object. Repair, if necessary, before restarting.
7. Never make adjustments or repairs with the engine running. The carburetor can be adjusted with the engine running. Do not change the engine governor settings or over-speed the engine.
8. Grass bagger components are subject to wear, damage and deterioration, which could expose moving parts or allow objects to be thrown. For storage, always make sure the grass bag is empty. Frequently check components and replace with manufacturer's recommended parts when necessary.
9. Mower blade(s) are sharp and can cut. Wrap the blade(s) or wear gloves and use extra caution when servicing them or the blade housing area.
10. Check the brake operation frequently. Adjust and service as required.
11. Wait for all movement to stop before servicing any part of the unit.

Look for this symbol to indicate important safety precautions. This symbol indicates: "Attention! Become Alert! Your Safety Is At Risk."

SAFE MOWING GUIDE

Each person that operates power equipment must learn to use correct and safe mowing procedures. **To help you learn, carefully read the following pages.** Most of the time the operator was not correctly shown or did not read the instructions on the unit or in the Instruction Book before using the unit. Also, some operators do not have enough experience. The result is unsafe use, endangering the operator, bystanders and the equipment. Another result can be a poor appearance of the area mowed.

Read this book. Read the instructions on the unit. Operate the mower according to the Safe Mowing Guide. Follow all safety rules, cautions or warnings in this book and on the unit. Make sure anyone that uses the unit reads the instructions and is told how to safely operate the mower.

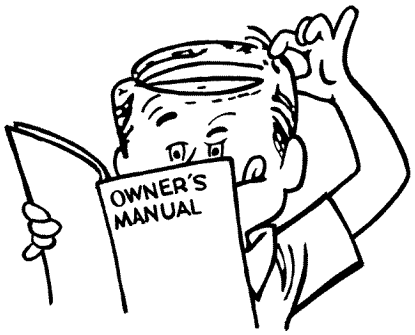

The mower will give you good service and durability, if operated in normal conditions. If the mower is not correctly serviced or is used where the terrain is rough or unsuitable, product performance and safety will be decreased.

Correct clothing is an important part of safe mowing. Safety glasses will protect the eyes from objects discharged by the mower. Safety shoes with steel plates can protect a foot from injury by the blade. For protection from objects discharged from the mower, wear clothing that will cover the arms and legs.

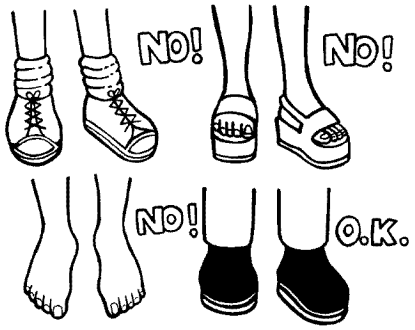

Before you start cutting the grass, practice using the mower in a large open and level area. Learn the location of the controls on the mower. Know the purpose of the controls and how they work. In an emergency, how fast you can stop the blade is important. Learn how to control the mower at all times.

Many engines are started by hand. When you use a pull start or rope start, place your feet apart and away from the blade(s). Hold the rope handle tight. Never wrap the rope around your arm or fingers for a "better grip". To start the engine, follow the instructions on the mower, in this book and in the engine operating instructions.

For electric start engines, sit in the seat to start the engine. The battery can be dangerous. Follow the instructions on the battery, the acid container, and in this book when working with the battery. Even small batteries have enough voltage to cause an injury. Always be careful.

The mower is designed to be operated by one person. Never let another person ride with you on the unit or on any accessories. A passenger will make the unit harder to control, block the visibility or distract the operator and is dangerous to the operator, the passenger and the equipment. Without a passenger seat, the passenger can fall from the mower or contact dangerous parts. A mower is not a toy for showing off or for giving rides.

Never cut a wet lawn. Wet grass can cause an accident, affect mower performance and can cause problems with future lawn growth and appearance. Wet grass is slippery and can cause the mower to slip. Someone can get injured by touching the blade(s). Wet grass tends to clog the mower, causing poor discharge. Cut wet grass will collect on the lawn, retarding the growth of the grass. Also, getting the mower wet will cause parts to rust and decrease the life of the unit.

When you look over the lawn, remember obstacles that cannot be removed, like pipes, stumps or rocks. Keep away from these obstacles that can cause damage to the mower or injury to the operator or a person near the mower. Clear the area of rocks, toys, wire or other loose objects. These items can damage the mower or can be discharged by the mower blade.

The blade of a power mower rotates very fast. It can discharge rocks and other objects over a long distance which can be dangerous. The force of the objects can break windows, cause injuries or even put an eye out. Most of the time the injury is to a person, like a child. Keep every person completely away from the area to be mowed. Make sure the grass is not discharged toward anyone. Planning your mowing pattern has a double advantage. It can decrease the possibility of an injury and make the clean up after mowing easier.

Check the terrain of the area to be mowed. Mow in a pattern that will keep you away from dangerous areas. Check the distance you need to stop and the distance available to turn. Slopes and rough terrain must be mowed carefully and some areas must not be mowed at all. With riding mowers, mow up and down the hill. When you must mow rough terrain or on slopes, never change directions or change gears and stop in these areas only in an emergency. Before you ride up or down a slope, try to back straight up the slope. Do not ride up or down a slope that is too steep to back straight up. See the "Guide" in the back of this Instruction Book to check any slopes.

Before you start cutting, make sure the mower was completely assembled according to the Instruction Book. If the

SAFE MOWING GUIDE

mower was completely assembled at the store, you must still check the mower according to the assembly instructions. Make sure the mower is correctly assembled and that all fasteners are tight. Make sure the engine has the correct amount of oil. Check these items often during the life of the mower.

Your mower has a gasoline engine. Gasoline is a dangerous fuel. Keep gasoline only in an approved safety gasoline container. Do not keep large amounts of gasoline. When you add gasoline to the fuel tank, do not smoke. Store the gasoline container and the mower in an area that has good ventilation. Also, keep the gasoline away from any flames like the pilot light of a furnace or any other source of ignition. If the mower is to be stored for more than a few weeks, remove the gasoline from the fuel tank. When inside an enclosure, do not add gasoline to the fuel tank. Before you add gasoline, move the mower outside and add gasoline carefully. Before you start the engine, remove any gasoline from the outside of the fuel tank or from the mower. Warm gasoline will expand. Leave some space in the fuel tank for the gasoline to expand. Also, the fuel cap has a vent hole for fuel vapors. Always use the correct fuel cap. Failure to follow safety rules about gasoline will cause fires and explosions, injury to you and damage to the equipment and other property.

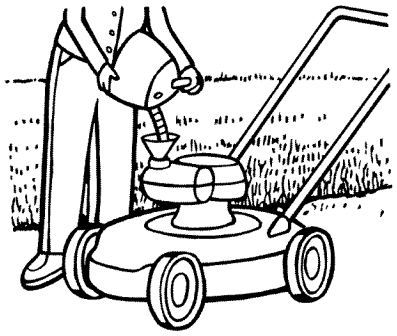

If you add gasoline to an engine that is running or hot, the result can be an explosion. Before you add gasoline, stop the engine and let the engine cool for several minutes. Remove dry grass and other debris from the mower. Keep the mower clean to improve the performance, help the engine and transmission run cooler, extend the life of moving parts, and decrease the danger of a fire.

Fires and explosions are not the only dangers when working around a mower. The engine, transmission, and the muffler will get hot in several minutes when the engine is running. Do not touch these parts of the mower. Stop the engine. Let the engine and transmission cool before servicing the mower. Remember, exhaust fumes are dangerous. Never operate the engine inside a building.

When you get a new mower, it can be a new experience for the family. Tell each person how a mower can be dangerous. Remember, a mower is not a toy. A mower is not to be used by children or anyone not old enough, strong enough or that does not have experience.

If the mower is not correctly assembled, not operated correctly, or not regularly serviced, the mower can be dangerous. The most important rule to follow is always use good judgement and common sense. Mow safely and carefully.

Your mower will easily cut thick grass. Fingers, feet and other parts can also be cut by the blade. Injuries occur when the operator does not think and reaches into the chute opening. Always operate the mower as if the blade is rotating. Do not service or make an adjustment, except to the carburetor, while the engine is running.

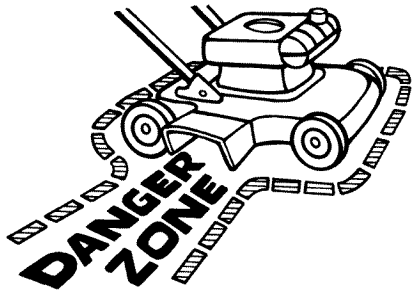

Use only accessories that are factory approved for your mower. The wrong accessory can decrease the safety of the mower and can even damage the unit. Read and follow the instructions included with the accessory and the mower.

Use only original equipment or replacement parts that are factory approved for service. If you need service, select an Authorized Service Center for your mower. If you do the work on the unit, follow the instructions in the Instruction Book.

When you mow, remember that children are attracted to the mower. Always use caution when mowing around obstacles like trees or shrubs or when moving backward. Only mow in a forward direction if possible. Your visibility is decreased when you mow backward. Also, the blades are made to cut while the unit is moving forward. If you mow backward, the cutting performance decreases.

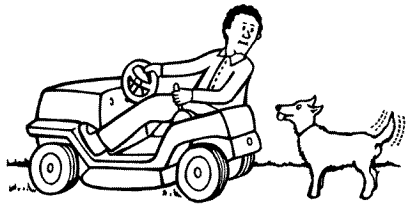

Before you leave the mower, stop the engine. Remove the key. Disengage and lower any attachment. Set the parking brake. Never mount or dismount from the seat while the engine is running. An accident can occur if you touch the brake, shift lever, throttle, clutch or blade control while the engine is running. Mount and dismount from the seat on the side of the unit that is marked ENTER-EXIT.

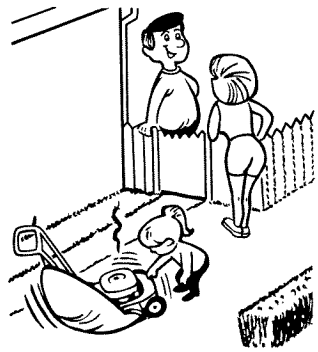

Make sure you are in good condition when you mow. When you mow for several hours your reflexes will decrease and your mind will not be as alert. Take a short break or an accident can occur. If the temperature is hot, use caution to prevent dehydration. If you are tired, angry or not completely alert, do not operate the mower. If you use alcohol, medication or drugs, do not use the mower or any type of power equipment.

Engine speed is a key to safe mowing and to a good looking lawn. The maximum speed of the engine was set at the factory. Do not change the setting of the engine governor.

Select the maximum engine and ground speed that is right for the terrain and the height of the grass. The blade cuts best when the engine is operating at maximum speed. The engine and transmission will also run cooler at maximum engine speed.

SAFE MOWING GUIDE

Also, the grass bagger will function better when the engine is operating at maximum speed. On slopes, decrease the ground speed and use care making sure the mower feels safe to operate.

If the weather conditions are bad, do not mow. If weather conditions become bad, stop cutting and finish later. It is dangerous to cut grass in the rain. Always find protection in an electrical storm. If the weather conditions are extra dry, protect your eyes with safety glasses from the dust and from the objects discharged by the mower. Also, a dust or a pollen mask can help.

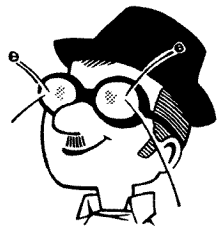

Your mower is equipped with a number of safety devices which are important to the safety of the operator and bystanders and must never be changed or removed from the mower. If a safety device is lost, damaged or no longer functions, repair or replace the device before you operate the mower.

It is best to mow during the day. If you must mow at night, make sure there is enough light for safe operation.

Your mower will require regular maintenance and service. The maintenance schedule depends on the hours of use. Also, mowing conditions can change the schedule. Check the Instruction Book for more information. Correct maintenance will help the mower function safely.

Do not service the mower (except for the carburetor adjustment) while the engine is running. Before you service the unit, even with the engine stopped, always disconnect the wire from the spark plug to prevent the engine from starting.

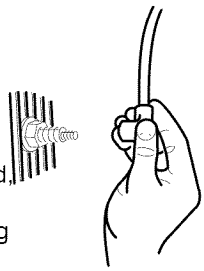

If you hit a large object during operation, stop the engine. Remove the wire from the spark plug. Carefully inspect the mower for damage. Before you start the engine again, make the necessary repairs. If you feel new or excessive vibration, immediately stop the engine and check for the problem. Vibration can be a warning of a problem. Keep all nuts, bolts and screws tight.

The blade is the most dangerous part of the mower. Frequently check the blade and the blade mounting fasteners. Keep the fasteners tight. If the blade hits a solid object, stop the engine. Remove the wire from the spark plug. Check for a blade that is bent, cracked or for other damages. Before you start the engine, replace a damaged blade(s). For safety, replace the blade every two years.

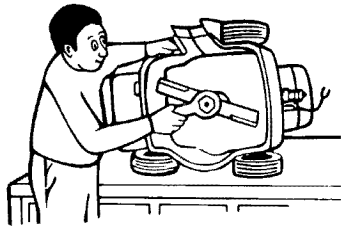

A sharp blade decreases the workload on the engine and more evenly cuts grass. Frequently sharpen the blade for a better looking cut. Use the left side of the mower housing to trim near an object.

A grass bagger is a good accessory for your mower. For best performance and safety, make sure the grass bagger is approved for use with your mower. Follow the assembly and operation instructions included with the grass bagger.

Some grass baggers require a special blade for best performance. Before you attach, check, or empty the grass bagger, always stop the engine. Before each use of the grass bagger, check for cracks, wear or deterioration. Before you use the grass bagger, replace a damaged part with a replacement part approved by the factory.

For you to have a good green lawn, follow the mowing procedures below. Do not cut the grass too short. If you cut the grass too short you can cause the grass to become yellow or make the lawn look brown. Use a lower height of cut in cool months when the grass is thicker. Raise the height of cut in hot dry periods. If you cut the grass with a blade that is not sharp or at a slow engine speed you can damage the grass. Move the throttle control to the FAST position when mowing and using the grass bagger. Also, use a slower ground speed when using the grass bagger.

If you change the direction or pattern of cut slightly every time you mow will make the grass grow stronger and thicker. Do not add oil or gasoline to the mower while on the lawn. Spilled oil or gasoline can kill the grass. In high or thick grass, do not try to cut all the grass the first time. Raise the height of cut on the first cutting and lower the height for the next cutting. Another way is to cut only part of the width of the mower and decrease your ground speed (not the engine) to move more slowly so that the mower can discharge the grass as it moves forward.

Understand the controls and how they work. Learn the ground speed(s) of your mower. Check the stopping distance required at different travel speeds. Check the turning radius of the mower. The controls on your riding mower are different from an automobile. The throttle is operated by hand and holds the engine speed constant until it is changed. The location of the shift lever and the shift pattern is different from that of an automobile. Also, the brake and clutch systems are different. Remember the procedures to follow in an emergency. Remember, turning off the engine ignition switch will stop the blade and the drive mechanism. If the traction of the wheels is lost or does not feel safe, disengage all systems and stop the engine. Dismount from the mower. Push the unit to a safe place before you begin mowing again.

Your unit has an electrical system that includes an operator presence switch in the seat. The operator presence switch detects if the operator is sitting on the seat. The engine will stop if the operator leaves the seat when the blade engagement control is engaged. This operator presence switch is a safety device only. It must not regularly be used to stop the engine or the blade. There are other control systems on the mower for this purpose. Always keep the operator presence switch and other safety devices and controls in place and operating for your protection.

Remember, your mower is a tool that can be dangerous if it is not correctly used. Follow the instructions in this Instruction Book. Safe and careful use of the mower will give you many safe hours of problem free use.

STEPS TO FOLLOW

BEFORE MOWING

- Be sure to dress correctly. Wear hard shoes, not sandals or tennis shoes.
- Examine the blade. A blade that is bent, cracked, or damaged must be replaced with a factory replacement blade.
- Fill the fuel tank outside. Clean off spilled fuel.
- Read and follow the Owner's Manual, the instructions with the engine, and the instructions with any attachments. Owner's Manual instructions are for your safety and the safety of others.
- Exhaust fumes are dangerous. Start the engine outside.
- Make sure all safety devices are in place and working correctly.
- Operation of the mower is only for a person that has experience.
- Wet grass can be dangerous. Let the grass dry.
- Clear children and others from the property and instruct them to stay away.
- Never cut the grass without good light.
- Pick up loose objects. Remove them from the mowing area.

WHILE MOWING

- Do not allow children and others in the mowing area. Watch for children and others.
- Watch for fixed objects and avoid them. They can damage the mower or cause injury.
- A hot engine, muffler, and transmission will cause a burn. Do not touch.
- Inclines and slopes must be carefully mowed. See the "Guide" in the back of this book to check a slope.
- Lack of daylight or good artificial light is cause to stop mowing.
- Examine the mower, the blade, and other parts for damage after hitting a foreign object or if the unit vibrates excessively.
- Do not make adjustments or repairs without stopping the engine. Disconnect the spark plug wire.
- On or near roads, watch out for traffic. Direct discharge away from roads.
- When mowing, avoid areas where traction is unsure. Look back before changing direction of travel. Look down and behind before and while backing.
- In heavy grass, raise the cutting height. Cut slower. Stop the engine to remove clogged grass from the mower.
- Never remove any safety related parts.
- Do not pour gasoline into a engine that is hot or running.

AFTER MOWING

- Always let the mower cool before storing in an enclosed area.
- Foreign material on the mower is dangerous. Clean off grass, leaves, grease and oil before storing.
- Tighten all loose nuts, bolts and screws before you use the unit.
- Empty and clean any grass catcher or other accessory.
- Remove the key or disconnect the spark plug wire to prevent unauthorized use.
- Make sure the mower is not kept near a source of ignition. Gas fumes can cause an explosion.
- Only original parts or factory approved substitutes can be used to service the mower.
- When storing the mower for an extended period, remove the fuel from the fuel tank.
- Instruct children to leave the mower alone. It is not a toy.
- Never keep gasoline near a source of ignition. Always use an approved container. Keep gasoline away from children.
- Lubricate according to the Instruction Book. See "Lubrication".

IMPORTANT--Read the Instruction Book. Keep this book for future use and reference.

WARNING: Look for this symbol to point out important safety precautions. It means: "Attention! Become Alert! Your Safety Is Involved."

INTERNATIONAL PICTORIALS

IMPORTANT: Some of the following pictorials are located on your unit or on literature supplied with the product. Before you operate the unit, learn and understand the purpose for each pictorial.

Safety Warning Pictorials

1 Warning
2 Shield Eyes. Explosive Gases Can Cause Blindness Or Injury.
3 No Sparks, Flames or Smoking.
4 Sulphuric Acid Can Cause Blindness Or Severe Burns
5 Flush Eyes Immediately With Water. Get Medical Help Fast.
6 IMPORTANT: Read Owner's Manual Before Operating This Machine.
7 WARNING: Thrown Objects. Keep Bystanders Away. Read User Instructions Before Operating This Machine.
8 WARNING: Do Not Use This Machine On Slopes Greater Than 15 Degrees.
9 DANGER: Keep People, Especially Children, Away From Unit.
10 DANGER: No Step.
11 DANGER: Keep Feet And Hands Away From Rotating Blade.
12 DANGER: Keep Hands Away From Rotating Blade.
13 DANGER: Disconnect Spark Plug Wire Before Servicing Unit.
14 WARNING: Hot Surface.
15 WARNING: Use Caution When Connecting Or Disconnecting Accessories.
16 WARNING: Crushed Fingers.

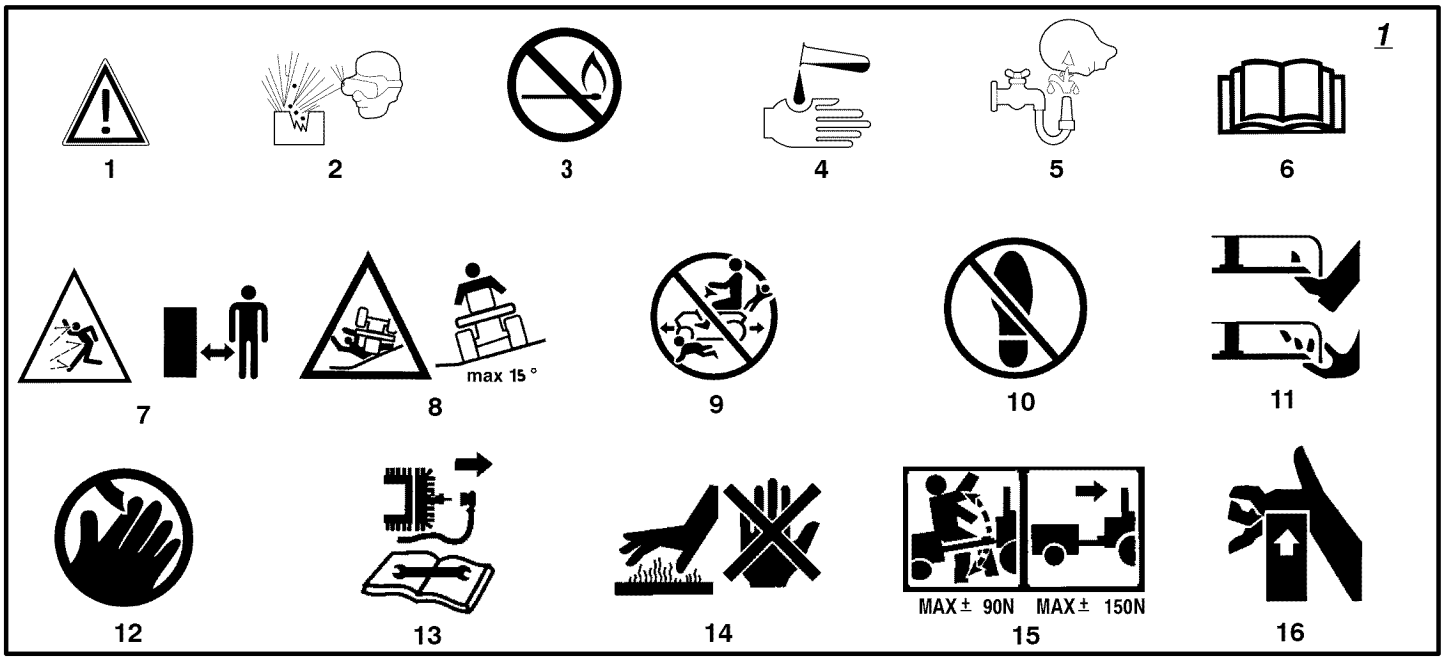

Control And Operating Pictorials

1 Engine Start
2 Lights
3 Engine Stop
4 Select Reverse
5 Engine Run
6 Engine Start
7 Brake
8 Parking Brake
9 Clutch
10 Slow
11 Fast
12 Choke
13 Oil
14 Blade Rotation Control
15 Raise
16 Fuel

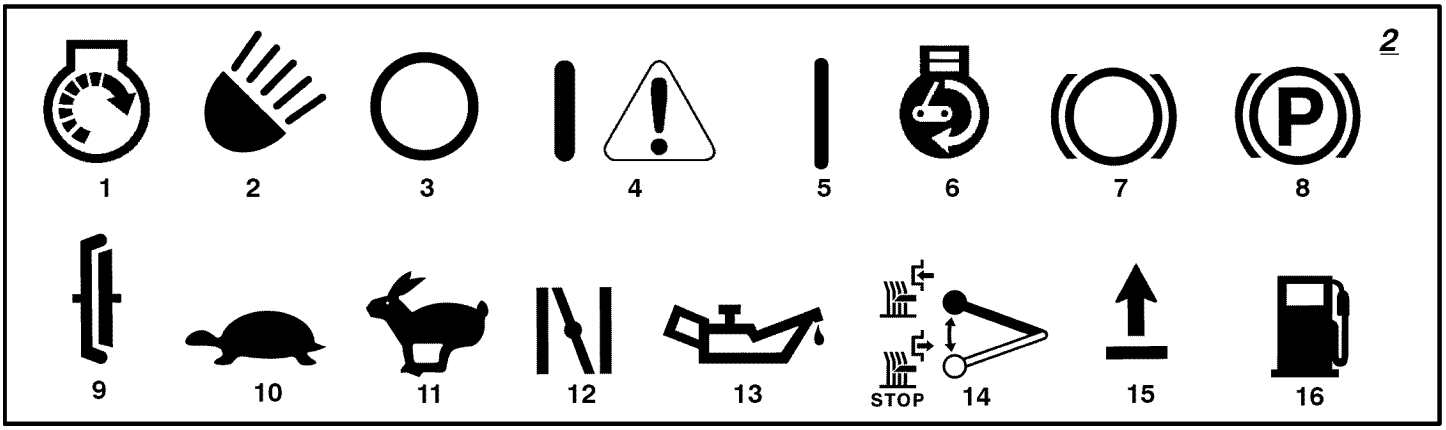

ASSEMBLY

Read and follow the assembly and adjustment instructions for your mower. All fasteners are in the parts bag. Do not discard any parts or material until the unit is assembled.

NOTE: In this instruction book, left and right describe the location of a part with the operator on the seat.

WARNING: Before doing any assembly or maintenance to the mower, remove the wire from the spark plug.

PARTS BAG - CONTENTS

The fasteners and other loose parts are shown below. The fasteners are shown full size. The quantity is shown in brackets ( ).

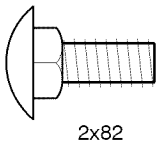

2x82
(2) Carriage Bolt

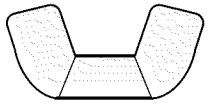

14x79
(2) Wing Nut

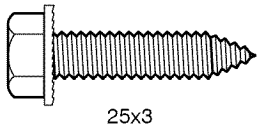

25x3
(1) Bolt

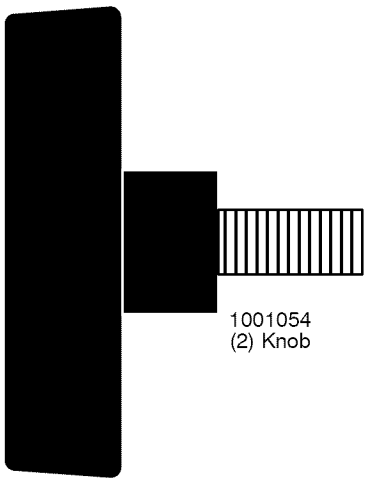

1001054
(2) Knob

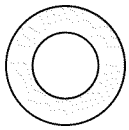

17x47
(2) Washer

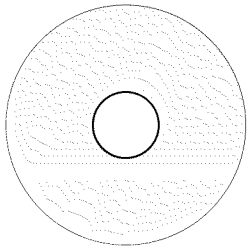

17x146
(1) Washer

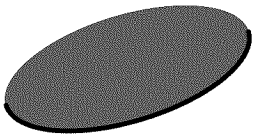

095338
(1) Hub Cover

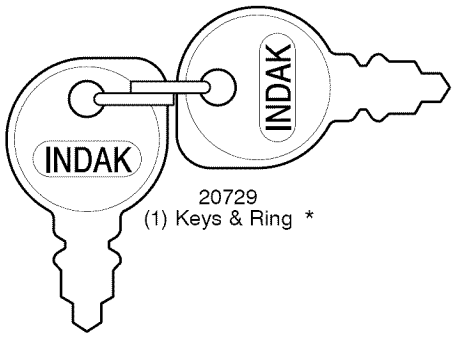

20729
(1) Keys & Ring *

* On some models, the keys are attached to the seat spring.

ASSEMBLY

HOW TO INSTALL THE SEAT

1. Carefully remove the plastic bag from the **seat.**

Use the fasteners shown below to install the **seat**. The fasteners are shown at full size.

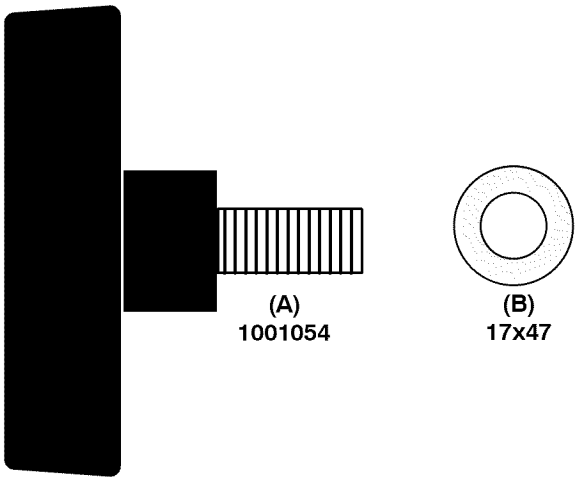

NOTE: Fasteners may be attached to seat for shipping purposes, if so remove fasteners before proceeding.

2. Align the holes in the **seat hinge** to the holes in the **seat** (Figure 1). Fasten the **seat** to the **seat hinge** with the fasteners as shown.
3. Check the operating position of the **seat.** If the **seat** needs to be adjusted, loosen the two **wing bolts**. Slide the **seat** forward or backward along the **seat adjusting holes** as shown. Tighten the **wing bolts (A).**

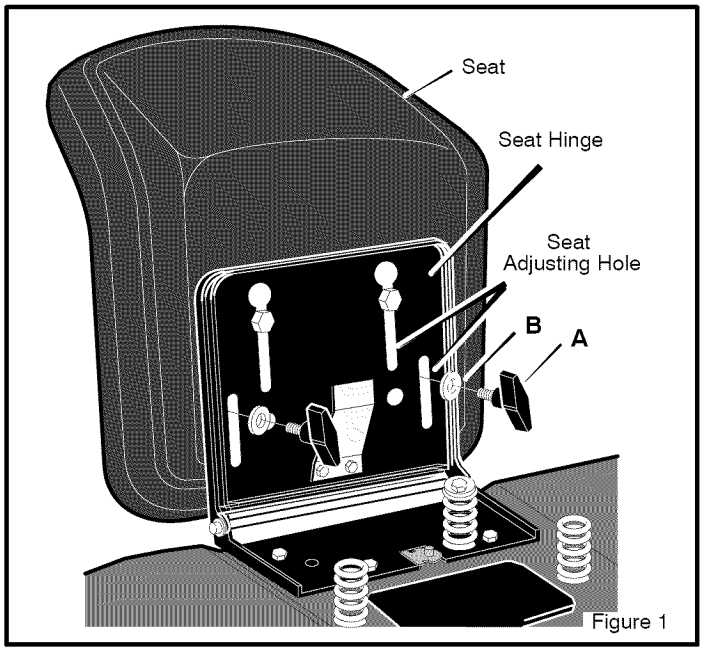

Figure 1

HOW TO ASSEMBLE THE STEERING WHEEL

Attach the steering wheel as follows:

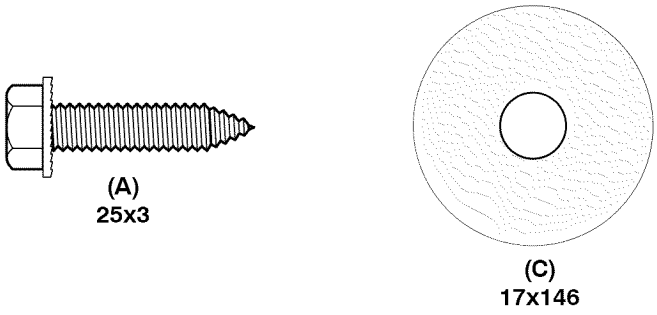

1. Make sure the front wheels point forward.
2. Slide the **cover** over the **steering post** (Figure 2).

   NOTE: Before attachment of the steering wheel, make sure that the front wheels point forward and are straight. For proper alignment of the steering wheel, see Figure 2.
3. Slide the **steering wheel** onto the **steering post.**
4. Use the fasteners shown above to secure the **steering wheel**. The fasteners are shown at full size. Tighten the screw. DO NOT over tighten.
5. Remove adhesive backing from **hub cover** (found in parts bag) and place **hub cover** over hub.

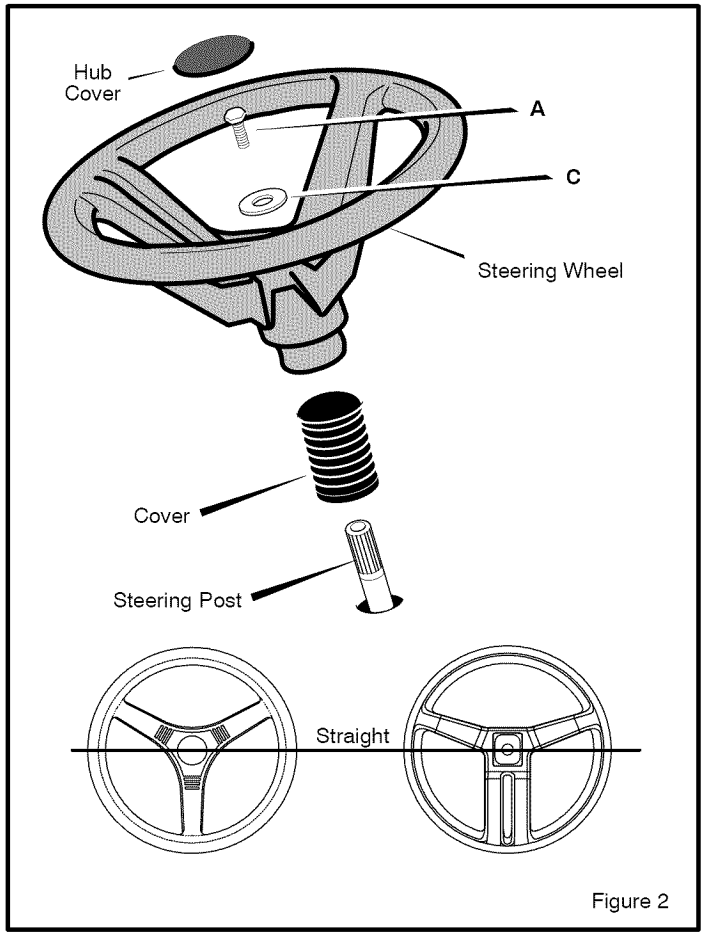

Figure 2

MAINTENANCE FREE BATTERY

IMPORTANT: Before you attach the battery cables to the battery, check the battery date. The battery date tells if the battery must be charged.

1. Check the top and the side of the battery for the location of the **battery date** (Figure 3).
2. If the **battery** is put into service *before* the **battery date**, the **battery** cables can be attached without charging the **battery**. See "How To Install The Battery Cables".
3. If the **battery** is put into service *after* the **battery date**, the **battery** must be charged. See "How To Charge The Maintenance Free Battery".

HOW TO CHARGE THE MAINTENANCE FREE BATTERY

WARNING: When you charge the battery, do not smoke. Keep the battery away from any sparks. The fumes from the battery acid can cause an explosion.

1. Remove the **battery** and **battery tray.**
2. Remove the protective caps from the **battery terminals**.
3. Use a 12 volt battery charger to charge the **battery**. Charge at a rate of 6 amperes for one hour. If you do not have a battery charger, have an authorized service center charge the battery.
4. Install the **battery** and **battery tray**. Make sure the **positive (+) terminal** is on the left side.

HOW TO INSTALL THE BATTERY CABLES

WARNING: To prevent sparks, fasten the red cable to the positive (+) terminal before you connect the black cable.

Use the fasteners shown below to install the **battery cables**. The fasteners are shown at full size.

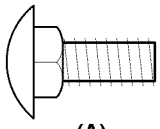

(A)
2x82

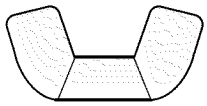

(B)
14x79

1. Remove the protective caps from the **battery terminals**.
2. Fasten the **red cable** to the **positive (+) terminal** with the fasteners as shown (Figure 3).
3. Fasten the **black cable** to the negative (-) terminal with the fasteners as shown.

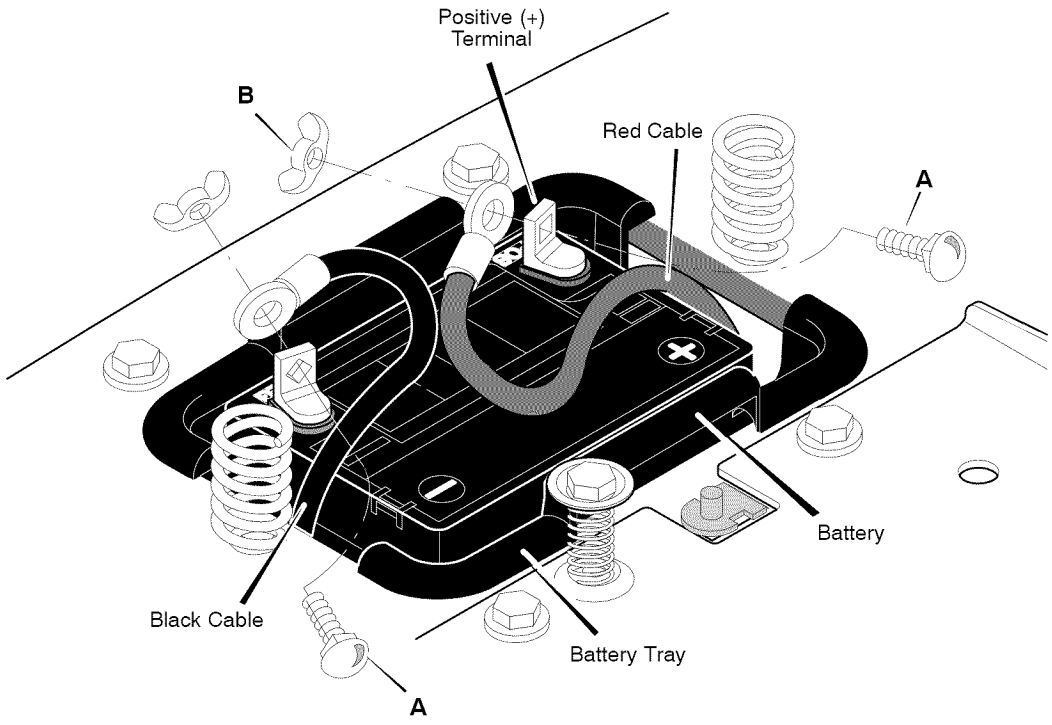

Figure 3

ASSEMBLY

IMPORTANT! BEFORE YOU START MOWING

- ❑ **Check the engine oil.**
- ❑ **Fill the fuel tank with gasoline.**
- ❑ **Check the air pressure of the tires.**
- ❑ **Check the level of the mower housing.**
- ❑ **Make sure the battery cables are attached.**
- ❑ **Make sure the wire is attached to the spark plug.**

WARNING: Before doing any assembly or maintenance to the mower, remove the wire from the spark plug.

NOTE: In this instruction book, left and right describe the location of a part with the operator on the seat.

HOW TO PREPARE THE ENGINE

NOTE: The engine was shipped from the factory filled with oil. Check the level of the oil. Add oil as needed.

NOTE: The operation of a new engine will sometimes result in a slight amount of smoke. This smoke is caused by paint or oil on or around the muffler. This is normal and only expected during initial operation.

A separate engine manual is also included with the unit. See this engine manual for the manufacturer's instructions for the type of gasoline and oil to use. Before you use the unit, read the information on safety, operation, maintenance, and storage.

WARNING: Follow the engine manufacturer's instructions for the type of gasoline and oil to use. Always use a safety gasoline container. Do not smoke when adding gasoline to the engine. When inside an enclosure, do not fill with gasoline. Before you add gasoline, stop the engine. Let the engine cool for several minutes.

IMPORTANT: This unit is equipped with an internal combustion engine and must not be used on or near any unimproved forest-covered, brush-covered or grass-covered land unless the engine's exhaust system is equipped with a spark arrester meeting applicable local or state laws (if any). If a spark arrester is used, it must be maintained in effective working order by the operator.

In the State of California the above is required by law (Section 4442 of the California Public Resources Code). Other states may have similar laws. Federal laws apply on federal lands. See an Authorized Service Center for a spark arrester for the muffler.

In some areas, local law requires the use of a resistor spark plug to control the ignition signals. See an Authorized Service Center for a resistor spark plug for the engine.

NOTE: Actual sustained horsepower will likely be lower due to operating limitations and environmental factors.

CHECK THE TIRES

NOTE: The tires were over inflated for shipment. The correct air pressure is shown on the side of the tire.

Check the air pressure in the tires. Tires with too much air pressure will cause the unit to ride rough. Also, the wrong air pressure will keep the mower housing from cutting level. The correct air pressure is shown on the side of the tire.

CHECK THE LEVEL OF THE MOWER HOUSING

Make sure the level of cut is still correct. After you mow a short distance, look at the area that was cut. If the mower housing does not cut level, see the instructions on "How To Level The Mower Housing" in the Maintenance section of this instruction book.

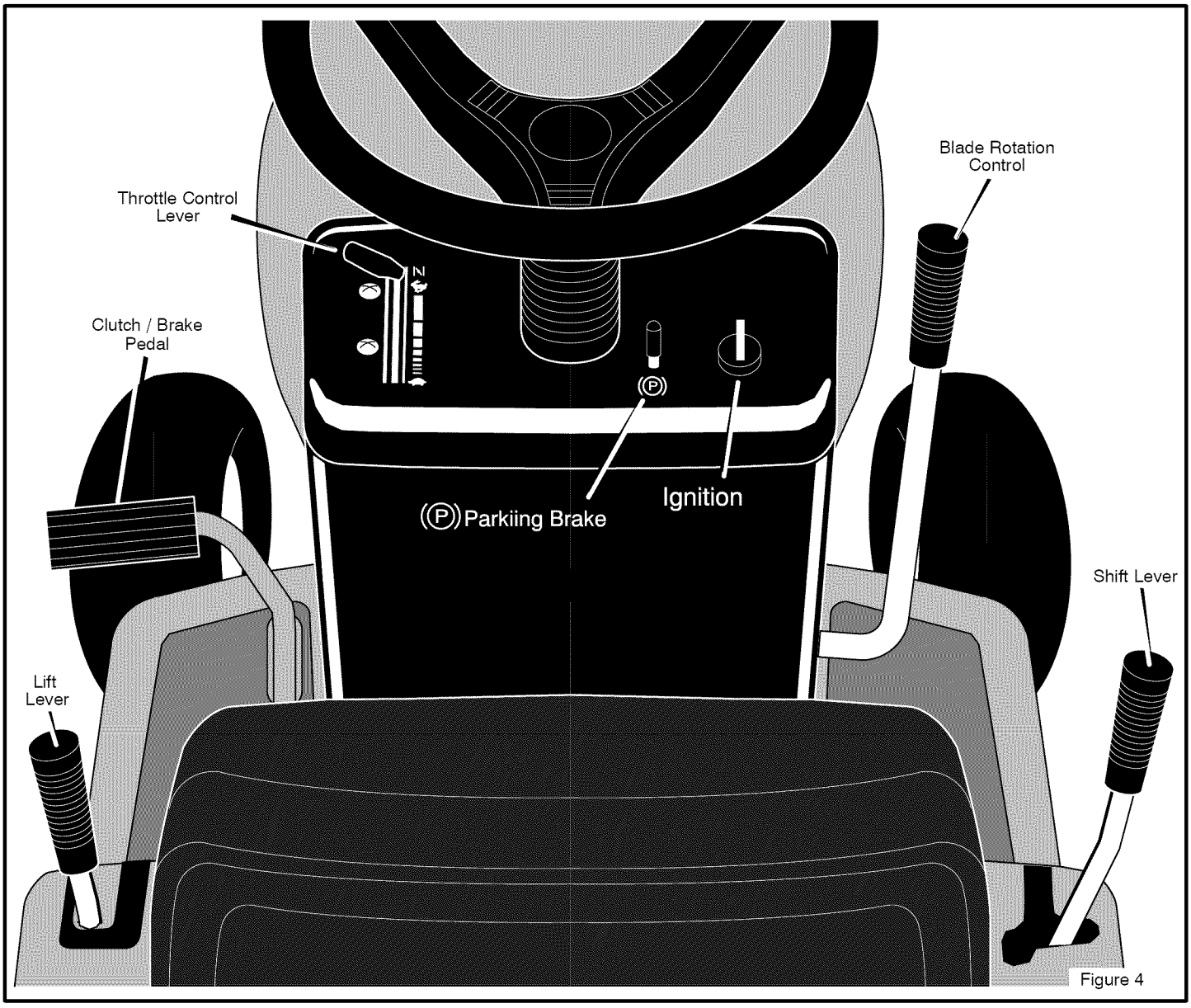

Figure 4

LOCATION OF CONTROLS

BLADE ROTATION CONTROL: Use the blade rotation control to start and stop the rotation of the blade and also to control various accessories, such as a snow thrower.

CLUTCH / BRAKE PEDAL: The pedal has two functions. The first function is a clutch. The second function is a brake. Use the brake pedal to quickly stop the forward or reverse motion of the unit.

HEADLIGHT SWITCH: There is not a separate headlight switch. As with many newer automobiles, the headlights are automatically on whenever the engine runs.

IGNITION KEY SWITCH: Use the ignition key switch to start and stop the engine. When you start the engine and release the ignition key, the ignition key switch will automatically default to the recommended RUN-MOW position for normal mowing.

SHIFT LEVER: Use the shift lever to change the speed of the unit.

LIFT LEVER: Use the lift lever to change the height of cut.

PARKING BRAKE LEVER: Use the parking brake lever to engage the brake when you leave the unit.

THROTTLE CONTROL LEVER: Use the throttle control lever to increase or decrease the speed of the engine.

OPERATION

ATTACHMENTS

This unit can use many different attachments. See the attachment page in this book. This unit can pull attachments like a lawn sweeper, a lawn aerator, a hopper spreader or a small trailer. This unit can not use attachments that engage the ground like a plow, a disk harrow, or a cultivator.

For all pull-behind attachments or trailers, the maximum gross weight is 250 pounds. Gross weight is the weight of the attachment or trailer and any load that might be on or in it.

Do not operate on a slope that is greater than 10 degrees when using a pull-behind attachment or trailer. We have included a slope guide in this book to help you determine the slope on which you will be operating your unit. Never allow someone to stand or ride on or in an attachment or trailer.

ELECTRICAL SAFETY SYSTEM

The electrical system has two primary components, an Operator Presence System and a Select Reverse™ system.

Operator Presence System (Seat)

The seat has an Operator Presence System to shut off the engine when the operator leaves the seat. This system is not intended for regular use in stopping the engine or the blade(s). Before leaving the seat, move the blade rotation control to the DISENGAGE position, shift to neutral, set the parking brake and stop the engine.

Select Reverse™ System

The **Select Reverse™** system will allow the mower blade(s) to continue to rotate when traveling in reverse. See "How To Operate The Ignition Key Switch" and "How To Start The Engine" for further details.

HOW TO OPERATE THE IGNITION KEY SWITCH

Use the ignition key switch to start and stop the engine. When you start the engine and release the ignition key, the ignition key switch will automatically default to the recommended RUN-MOW position for normal mowing.

START - Use this position to start the engine.

RUN-MOW - When you start the engine and release the ignition key, the ignition key switch will automatically default to the recommended **RUN-MOW** position for normal mowing. In the **RUN-MOW** position, the system will stop the engine and the blade(s) when the speed control pedal/shift lever is put in the reverse position.

SELECT REVERSE™ - The optional **Select Reverse™** position will allow the mower blade(s) to continue to rotate when traveling in reverse. Always go back to the recommended RUN-MOW position for normal mowing when operation in **Select Reverse™** is not absolutely necessary. NEVER use the **Select Reverse™** option if children are on or near the property.

WARNING: Operators are strongly discouraged from using this option unless the operator decides such operation is absolutely necessary and that safe precautions are taken. Never use the Select Reverse™ option if children are on or near the property. Always look down and behind before and while backing. After using the Select Reverse™ position, move the ignition key back to the RUN-MOW position.

STOP - Use this position to stop the engine.

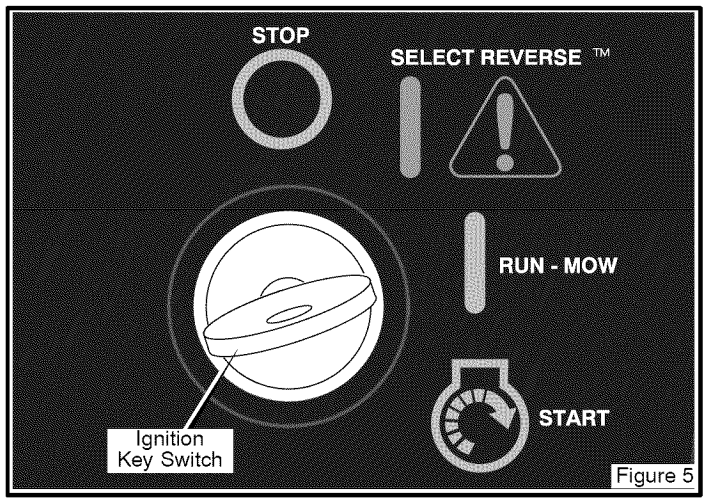

Figure 5

HOW TO USE THE THROTTLE CONTROL

Use the **throttle control** to increase or decrease the speed of the engine.

CAUTION: Always operate the engine with the throttle control in the FAST position. If the engine runs for several minutes at slower than the FAST position, the engine and transmission will overheat and can be damaged.

1. The FAST position is marked with a detent. For normal operation and when using a grass bagger, move the **throttle control** to the FAST position. For maximum charging of the battery and for a cooler running engine and transmission, operate the engine in the FAST position.
2. For transport and to tow pull behind attachments, move the throttle control to the SLOW position.
3. The engine governor is set at the factory for maximum performance. Do not adjust the governor to increase the speed of the engine.

HOW TO USE THE BLADE ROTATION CONTROL

The **blade rotation control** is next to the steering wheel (Figure 6). Use the **blade rotation control** to engage the blade(s) or to operate a snow thrower attachment.

1. Before you start the engine, make sure the **blade rotation control** is in the **DISENGAGE position**.
2. Move the **blade rotation control** to the **ENGAGE position** to rotate the blade(s).

   Note: If the engine stops when you engage the blade(s), the transmission is in reverse.
3. Move the **blade rotation control** to the **DISENGAGE position** to stop the blade(s). Before you leave the operator's position, make sure the blade(s) has stopped rotating.
4. Before you ride the unit across a sidewalk or a road, move the **blade rotation control** to the **DISENGAGE position.**
5. Before operating in reverse, move the blade rotation control to the **DISENGAGED position.** If the blade rotation control is not in the **DISENGAGED position,** the engine will stop when the speed control pedal/shift lever is moved to REVERSE position.

WARNING: Always keep your hands and feet away from the blade, deflector opening, and the mower housing when the engine runs.

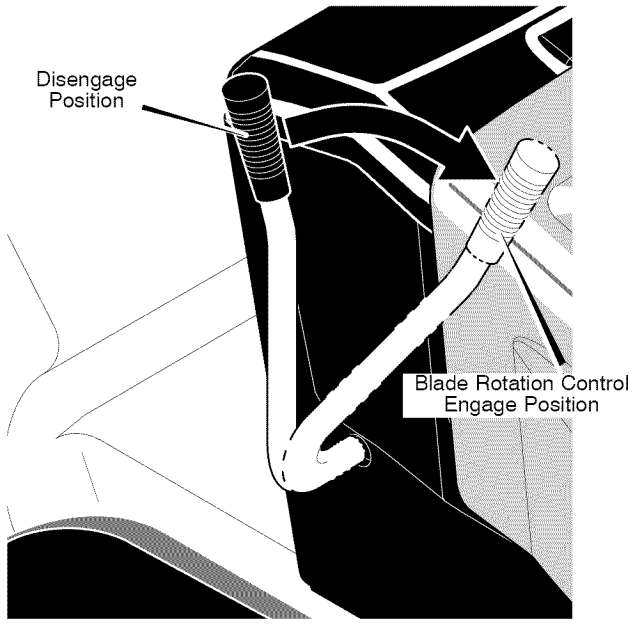

Figure 6

HOW TO USE THE SHIFT LEVER

To change the forward speed or the direction of the unit, follow the steps below.

CAUTION: Before you move the shift lever, completely push the clutch/brake pedal forward to stop the unit. If the unit is not stopped, the gearbox can be damaged.

1. Completely push the clutch/brake pedal forward to stop the unit. Keep your foot on the pedal.
2. Move the throttle control lever to the SLOW position.
3. To go forward, move the shift lever to a forward speed setting.
4. To go backward, move the shift lever to reverse. Always disengage blades and look down and behind before and while backing.
5. Slowly release the clutch/brake pedal. Do not keep your foot on the pedal.
6. Move the throttle control to the FAST position.

FUNCTION	SHIFT LEVER 5-6 Speeds	THROTTLE
Trimming Snow Thrower	1	FAST CHOKE FAST SLOW THROTTLE
Bagging Grass	1 or 2	
Mulching Grass	1 or 2	
Normal Mowing	2 or 3	
Easy Mowing Snow Blade	3 or 4	
Transport	5-6	
Attachments	*	

*** See the Instruction Book for the Attachment.**

OPERATION

HOW TO SET THE PARKING BRAKE

1. Completely push the clutch/brake pedal forward.
2. Lift the **parking brake lever** (Figure 7).
3. Remove your foot from the clutch/brake pedal and then release the **parking brake lever**. Make sure the parking brake will hold the unit.
4. To release the parking brake, completely push the clutch/brake pedal forward. The parking brake will automatically release.

WARNING: Before you leave the operator's position, move the shift lever to the neutral (N) position. Set the parking brake. Move the blade rotation control to the DISENGAGE position. Stop the engine and remove the ignition key.

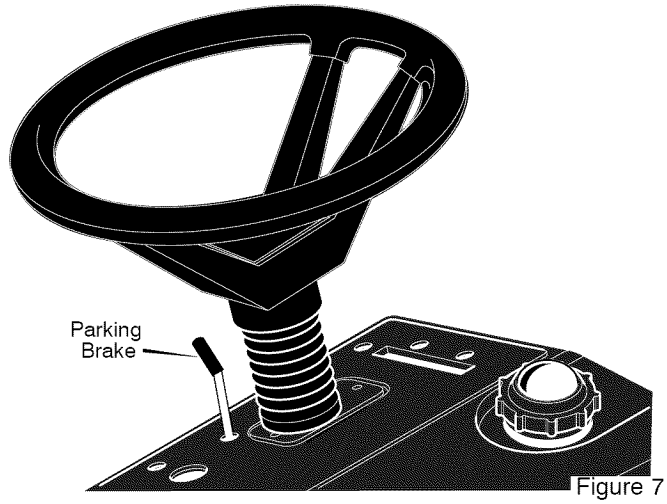

Figure 7

HOW TO CHANGE THE CUTTING HEIGHT

To change the cutting height, raise or lower the **lift lever** as follows.

1. Move the **lift lever** forward to lower the mower housing and back to raise the mower housing (Figure 8).
2. When you ride on a sidewalk or road, move the **lift lever** to the highest position and move the blade rotation control to the DISENGAGE position.

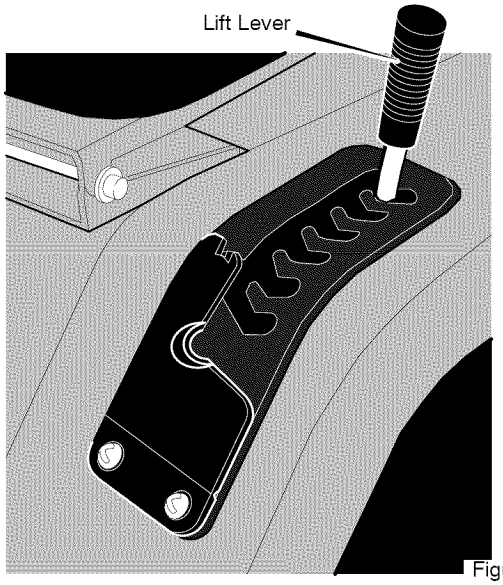

Figure 8

HOW TO STOP THE UNIT

1. Completely push the **clutch/brake pedal** forward to stop the unit. Keep your foot on the pedal.
2. Move the blade rotation control to the DISENGAGE position.
3. Move the shift lever to the NEUTRAL position.
4. Set the parking brake.

WARNING: Make sure the parking brake will hold the unit.

5. Move the throttle control to the SLOW position.
6. To stop the engine, turn the ignition key to the STOP O position. Remove the key.

HOW TO TRANSPORT THE UNIT

To transport the unit, follow the steps below.

1. Move the blade rotation control to the DISENGAGE position
2. Raise the lift lever to the highest position.
3. Move the throttle control to a position between SLOW and FAST.
4. To go faster, move the shift lever to a faster speed.

OPERATION

HOW TO OPERATE WITH THE MOWER HOUSING

WARNING: The deflector is a safety device. Do not remove the deflector. The deflector forces the discharged material toward the ground. Always keep the deflector in the down position. If the deflector is damaged, replace the deflector with an original equipment part from an authorized service center.

IMPORTANT: When you operate with the mower housing, always operate with the throttle control in the FAST position.

1. Start the engine.
2. Move the lift lever to a height of cut position. In high or thick grass, cut the grass in the highest position first and then lower the mower housing to a lower position.

   CAUTION: Do not operate with the mower housing in the LEVEL ADJUSTMENT position. If you operate in the LEVEL ADJUSTMENT position, the mower housing and blades can be damaged.
3. Move the throttle control to the SLOW position.
4. Slowly move the blade rotation control to the ENGAGE position.
5. Push the clutch/brake pedal completely forward.
6. Move the shift lever to one of the speed settings.

   NOTE: When you mow in heavy grass or mow with a bagger, put the shift lever in the slowest speed.
7. Slowly release the clutch/brake pedal.
8. Move the throttle control to the FAST position. If you need to go faster or slower, stop the unit and move the shift lever to another speed setting.
9. Make sure the level of cut is still correct. After you mow a short distance, look at the area that was cut. If the mower housing does not cut level, see the instructions on "How To Level The Mower Housing" in the Maintenance section.

WARNING: For better control of the unit, always select a safe speed.

HOW TO OPERATE THE UNIT ON HILLS

WARNING: Do not ride up or down slopes that are too steep to back straight up. Never ride the unit across a slope. See the "Slope Guide" in the back of this book for information on how to check slopes.

1. Before you ride up or down a hill, move the shift lever to the slowest speed.
2. Do not stop or change speed settings on a hill. If you must stop, quickly push the clutch/brake pedal forward and set the parking brake.
3. To start again, make sure the shift lever is in the slowest speed. Move the throttle control to the SLOW position. Slowly release the pedal.
4. If you must stop or start on a hill, always have enough space for the unit to roll when you release the brake and engage the clutch.
5. Be very careful when you change directions on a hill. When on a slope or in a turn on a hill, move the throttle control to the SLOW position to help prevent an accident.

OPERATION

BEFORE STARTING THE ENGINE

CHECK THE OIL

NOTE: The engine was shipped from the factory filled with oil. Check the level of the oil. Add oil as needed. See the engine manufacturer's instructions for the type of gasoline and oil to use.

1. Make sure the unit is level.

   NOTE: Do not check the level of the oil while the engine runs.

2. Check the oil. Follow the procedure in the engine manufacturer's instructions.

3. If necessary, add oil until the oil reaches the FULL mark on the dipstick. The quantity of oil needed from ADD to FULL is shown on the dipstick. Do not add too much oil.

ADD GASOLINE

WARNING: Always use a safety gasoline container. Do not smoke when adding gasoline to the fuel tank. Do not add gasoline when you are inside an enclosure. Before you add gasoline, stop the engine and let the engine cool for several minutes.

Fill the fuel tank with regular unleaded gasoline. Do not use premium unleaded gasoline. Make sure the gasoline is fresh and clean. Leaded gasoline will increase deposits and shorten the life of the valves.

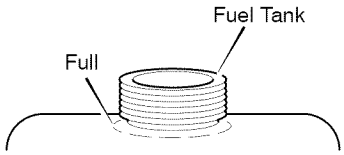

CAUTION: A mixture of alcohol (ethanol or methanol) and gasoline (called gasohol), will attract moisture and cause acid deposits during storage. While the unit is in storage, the acids in the fuel can damage the fuel system.

To prevent engine problems with the fuel system, empty the fuel system before storage of 30 days or longer as follows.

1. Drain the fuel tank.

2. Start the engine. Let the engine run until the fuel lines and the carburetor are empty.

3. After storage, make sure you use fresh fuel. See the storage instructions for additional information.

4. Never use engine cleaner or carburetor cleaner in the fuel tank or permanent damage can occur.

CARBURETOR

The factory settings for the carburetor are for most conditions. If the engine is operated under the following conditions, you can adjust the carburetor mixture. To adjust the carburetor, see the engine manufacturer's instructions.

1. The engine has a loss of power or does not run smooth.

2. A change from summer to winter operation.

3. A 40 degree change in the operation temperature. The carburetor was adjusted at 80 degrees at the factory.

4. The engine is operated above 4,000 feet.

HOW TO START THE ENGINE

WARNING: The electrical system has two primary components, an operator presence system and a Select Reverse™ system. The operator presence system determines if the operator is sitting on the seat. This system will stop the engine when the operator leaves the seat. The Select Reverse™ system gives the operator the ability to temporarily mow in reverse if he decides such operation is absolutely necessary and safe operating precautions are taken. For your protection, always make sure these systems operate correctly.

NOTE: The engine will not start unless you depress the clutch/brake pedal or engage the parking brake and move the blade rotation control to the DISENGAGE position.

1. Push the clutch/brake pedal completely forward. Keep your foot on the pedal.

2. Move the shift lever to the neutral (N) position.

3. Make sure the blade rotation control is in the DISENGAGE position. If the blade rotation control is not in the DISENGAGE position, the engine will not start.

4. Move the throttle control completely forward to the CHOKE or FAST position. Some models have a separate choke knob. Pull the choke knob to the full CHOKE position.

5. Turn the ignition key to the START position. Release the key when the engine starts. The ignition key switch will automatically default to the recommended RUN-MOW position for normal mowing. See "How To Operate The Ignition Key Switch" in the Operation Section.

   NOTE: If the engine does not start after four or five tries, see the TROUBLE SHOOTING CHART.

6. Slowly move the throttle control to the SLOW position.

7. Let a cold engine run for several minutes. Begin work when the engine is warm. To start a hot engine, move the throttle control to a position between FAST and SLOW.

OPERATION

OPERATING TIPS

1. Check the blade rotation control for correct adjustment. For the blade(s) to disengage correctly, the adjustment must be correct.
2. Before you use the unit, check the oil in the engine and add oil if necessary.
3. If the engine will not start, first make sure the wire is attached to the spark plug.
4. Make sure all the belts are inside all the belt guides. See the instructions on how to remove and install the motion drive and mower drive belts.
5. Before you make an inspection, adjustment (except for the carburetor) or repair, make sure the wire from the spark plug is disconnected.
6. For longer life of the battery on electric start models, charge the battery every three months.
7. Use the shift lever to change the ground speed, not the throttle control.
8. Belt noise can occur when the blade or clutch is engaged. This noise is normal and does not affect the operation of the unit.

MOWING AND BAGGING TIPS

1. For a lawn to look better, check the cutting level of the mower housing. See "How To Level The Mower Housing" in the Maintenance section.
2. For the mower housing to cut level, make sure the tires have the correct amount of air pressure and use slow ground speeds when turning.
3. Every time you use the unit, check the blade. If the blade is bent or damaged, immediately replace the blade. Also, make sure the nut for the blade is tight.
4. Keep the blade(s) sharpened. Worn blades will cause the ends of the grass to turn brown.
5. Do not cut or bag grass that is wet. Wet grass will not discharge correctly. Let the grass dry before cutting.
6. Use the left side of the mower housing to trim near an object.
7. Discharge the cut grass onto the mowed area. The result is a more even discharge of cut grass.
8. When you mow large areas, start by turning to the right so that the cut grass will discharge away from shrubs, fences, driveways, etc. After one or two rounds, mow in the opposite direction making left turns until finished (Figure 9).
9. Use a mowing pattern that eliminates reverse travel as much as possible.
10. If the grass is very high, cut two times to decrease the load on the engine. First cut with the mower housing in the highest position and then lower the mower housing for the second cut.
11. For better engine performance and an even discharge of the cut grass, always operate the engine with the throttle in FAST position.
12. When you use a bagger, operate the engine with the throttle in FAST position and the shift lever in first or second gear.
13. For better cutting performance and a quality cut, mow with the shift lever in one of the slower speeds.
14. After each use, clean the bottom and top of the mower housing for better performance. Also, a clean mower housing will help prevent a fire.

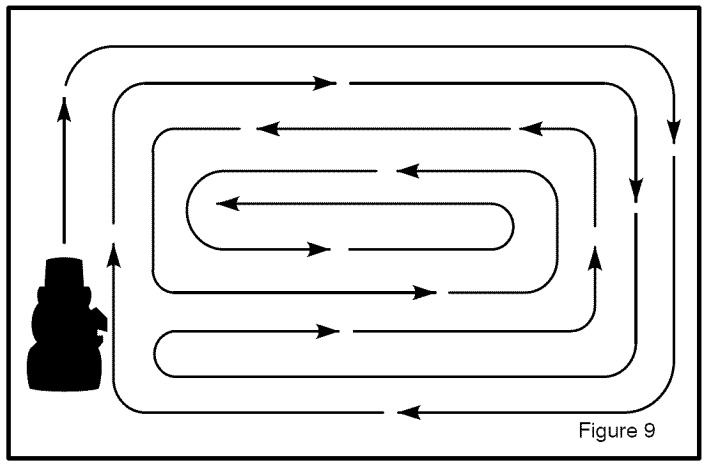

Figure 9

MAINTENANCE

MAINTENANCE CHART							
	PROCEDURE	EACH USE	FIRST 2 HOURS	EVERY 25 HOURS	EVERY 50 HOURS	EVERY 100 HOURS	BEFORE STORAGE
MOWER	Blade, Inspect and Sharpen			√			
	Blade Rotation Control, Check			√			
	Brake, Check			√			
	Clutch, Check			√			
	Tires, Check			√			√
	Battery, Check and Charge			√			√
	Battery, Clean				√		√
	Lubrication *				√		√

* Dusty conditions every 25 hours.

GENERAL RECOMMENDATIONS

1. The owner's responsibility is to maintain this product. This will extend the life of the product and is also necessary to maintain warranty coverage.
2. Check the spark plug, drive brake, lubricate the unit, and clean the air filter once a year.
3. Check the fasteners. Make sure all fasteners are tight.
4. Follow the Maintenance section to keep the unit in good operating condition.

WARNING: Before you make an inspection, adjustment, or repair to the unit, disconnect the wire to the spark plug. Remove the wire from the spark plug to prevent the engine from starting by accident.

NOTE: Torque is measured in foot pounds (metric Nm). This measurement describes how tight a nut or bolt must be. The torque is measured with a torque wrench.

HOW TO CHECK THE MUFFLER

Check the muffler every 50 hours. Make sure the muffler is correctly mounted and is not loose. If the muffler is worn or burnt, replace with a new muffler. A worn muffler is a fire hazard and can also damage the engine.

If you mount a spark arrester to the muffler, also check the spark arrester when you check the muffler. If the spark arrester is worn or damaged, replace it with a new spark arrester. See your nearest authorized service center for a spark arrester.

MAINTENANCE

INSPECT BLADE

WARNING: Before you inspect or remove the blade, disconnect the wire to the spark plug. If the blade hits an object, stop the engine. Check the unit for damage. The blade has sharp edges. When you hold the blade, use gloves or cloth material to protect your hands.

If you keep the blade sharp and inspect the blade for damage, the blade will cut better and be more safe to operate. Frequently check the blade for excessive wear, cracks, or other damage. Frequently check the nut that holds the blade. Keep the nut tight. If the blade hits an object, stop the engine. Disconnect the wire to the spark plug. See if the blade is bent or damaged. Check the blade adapter for damage. Before you operate the unit, replace damaged parts with original equipment parts. See the authorized service center in your area. Every three years, have an authorized service person inspect the blade or replace the old blade with an original equipment part.

HOW TO REMOVE AND INSTALL THE BLADE

1. Remove the mower housing. See the instructions on "How To Remove The Mower Housing".
2. Use a piece of wood to keep the blade from rotating.
3. Remove the **nut** that holds the blade (Figure 10).

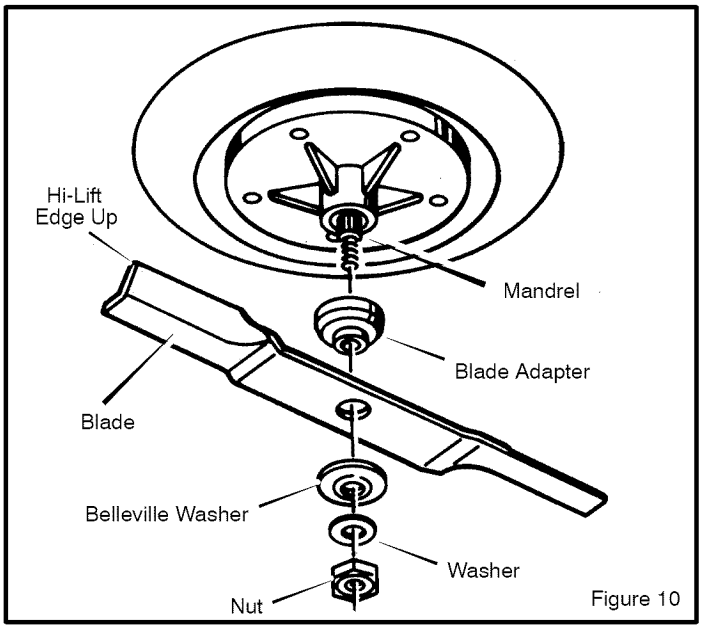

Figure 10

4. Check the **blade** and the **blade adapter** according to the instructions for "Inspect Blade". Replace a badly worn or damaged **blade** with an original equipment blade. See an authorized service center in your area.
5. Clean the top and bottom of the mower housing. Remove all the grass and debris.
6. Mount the **blade** and **blade adapter** on the **mandrel** (Figure 10).
7. Mount the **blade** so that the **hi-lift edges** are up. If the **blade** is upside down, the **blade** will not cut correctly and can cause an accident.
8. Fasten the **blade** with the original washers and **nut**. Make sure the outside rim of the **Belleville washer** is against the **blade** (Figure 11).

WARNING: Always keep the nut tight that holds the blade. A loose nut or blade can cause an accident.

9. Tighten the **nut** that holds the **blade** to a torque of 35 foot pounds (47,5 N-m).
10. Install the mower housing. See "How To Install The Mower Housing".

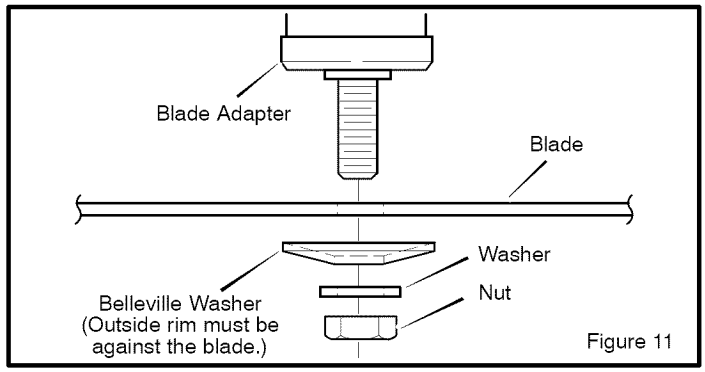

Figure 11

HOW TO SHARPEN THE BLADE

WARNING: Vibration can be caused if the blade is not correctly balanced or if the blade is damaged. A blade that is damaged with cracks can break and cause an accident.

Keep a sharp edge on the **blade**. A **blade** that is not sharp will cause the tips of the grass to become brown.

1. Sharpen the **blade** two times a year or every 25 hours.
2. Remove the **blade** according to the instructions in "How To Remove And Install The Blade".
3. Clean the **blade** with a brush, soap and water. Check the **blade**. Look for cracks, nicks, or other damage. Replace a badly worn or damaged blade with an original equipment blade. See an authorized service center in your area.
4. Sharpen the **blade** with a **file** (Figure 12). Make sure you keep the original bevel angle.
5. Make sure the **blade** is balanced. Use a **screwdriver** and hold the **blade** parallel to the **ground** (Figure 12). A **blade** that is balanced will stay parallel to the **ground.** If the **blade** is not balanced, the heavy end will rotate toward the **ground**. Sharpen the heavy end until the **blade** is balanced.
6. A new blade will cut better than a badly worn blade. Every three years, have an authorized service person inspect the blade or replace the old blade with an original equipment blade.
7. Assemble the **blade** according to the instructions "How To Remove And Install The Blade".

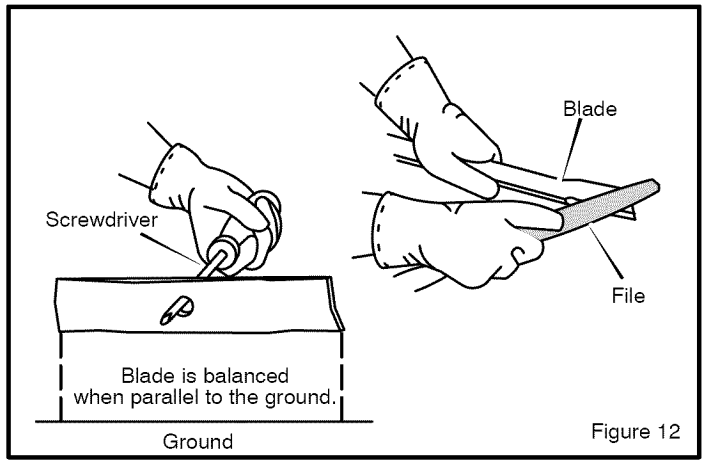

Figure 12

HOW TO ADJUST THE BLADE ROTATION CONTROL

WARNING: To prevent an injury, the blade rotation control must operate correctly.

In normal usage, the **blade rotation control** will not require an adjustment. However, if the cutting performance decreases or the quality of cut is poor, make the following changes.

1. When you mow, make sure the throttle control in in the FAST position.
2. Move the **blade rotation control** to the **DISENGAGE position** (Figure 13).
3. Stop the engine. Disconnect the wire from the spark plug.

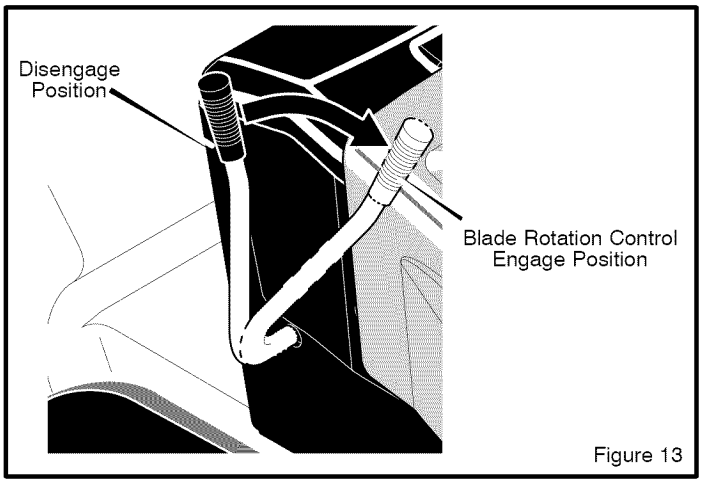

Figure 13

4. Check the blade(s). Keep a sharp edge on the blade(s). A blade that is not sharp will cause the tips of the grass to become brown.
5. Disconnect the **blade drive spring** from the **blade control rod**. Move the **blade drive spring** to the *middle hole* (Figure 14). This will increase the tension on the **mower drive belt**.

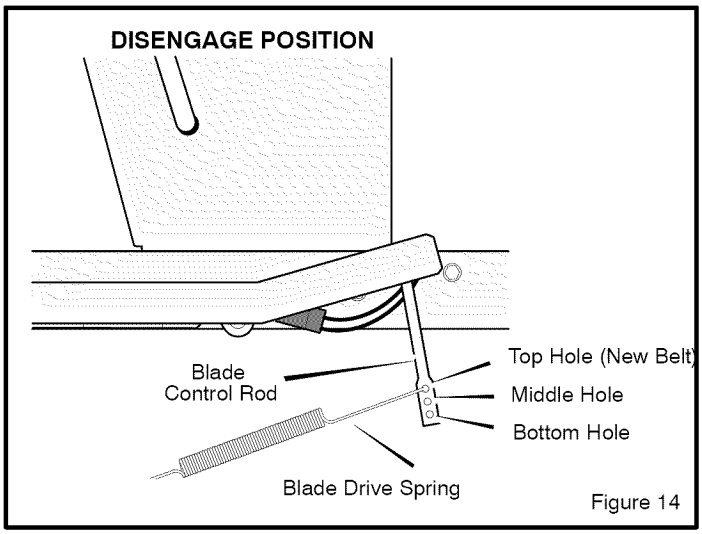

Figure 14

6. Attach the wire to the spark plug. Mow for a short distance and again check the quality of cut. If necessary, move the **blade drive spring** to the *bottom hole*.
7. Again check the quality of cut. If the quality of cut has not improved, replace the **mower drive belt**. See "How To Replace The Mower Drive Belt". If replacing the belt does not correct the problem, take the unit to an authorized service center.
8. Move the **blade rotation control** to the **DISENGAGE position.** Stop the engine. Disconnect the wire from the spark plug. Check the operation of the **blade brake**. Rotate the pulleys with your hand. Make sure the **brake pads** are pressed tightly against the pulleys (Figure 15).

WARNING: If the brake pads do not press tightly against the pulleys, take the unit to an authorized service center.

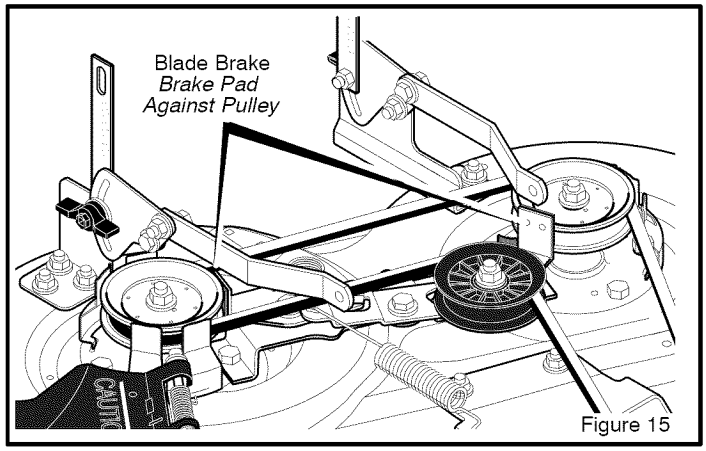

Figure 15

9. Move the **blade rotation control** to the **ENGAGE position.** Check the pads for the **blade brake**. If the pads are excessively worn or damaged, replace the **brake pad** assemblies. Correct replacement parts and assistance are available from an authorized service center.
10. Attach the wire to the spark plug. Mow for a short distance and again check the operation of the **blade rotation control**.
11. When you move the **blade rotation control** to the **DISENGAGE position**, all movement will stop within five seconds. If there is movement of the belt or the blades continue to rotate, engage and disengage the **blade rotation control** five times to remove any excess rubber from a new **mower drive belt**. If you need assistance, take the unit to an authorized service center.
12. If you replace the **mower drive belt**, move the **blade drive spring** to the *top hole* (Figure 14).

MAINTENANCE

HOW TO CHECK AND ADJUST THE DRIVE BRAKE

Completely push the clutch/brake pedal forward. Set the parking brake. Move the shift lever to the neutral (N) position. Push the unit. If the rear wheels rotate, adjust or replace the brake pads. Adjust the **drive brake** as follows.

1. The location of the **drive brake** is on the right side of the **gearbox** (Figure 16).
2. Make sure the parking brake is set and the shift lever is in neutral (N). Turn the **hex nut** in a clockwise direction until the rear wheels do not turn when the unit is pushed forward.
3. Release the parking brake and push the unit. If the unit does not roll, turn the **hex nut** in a counterclockwise direction until the unit rolls.
4. Set the parking brake. Push the unit. If the rear wheels do not turn, the **drive brake** is correctly adjusted. Release the parking brake.

WARNING: If you cannot correctly adjust the drive brake, replace the brake pads. Correct replacement parts and assistance are available from an authorized service center.

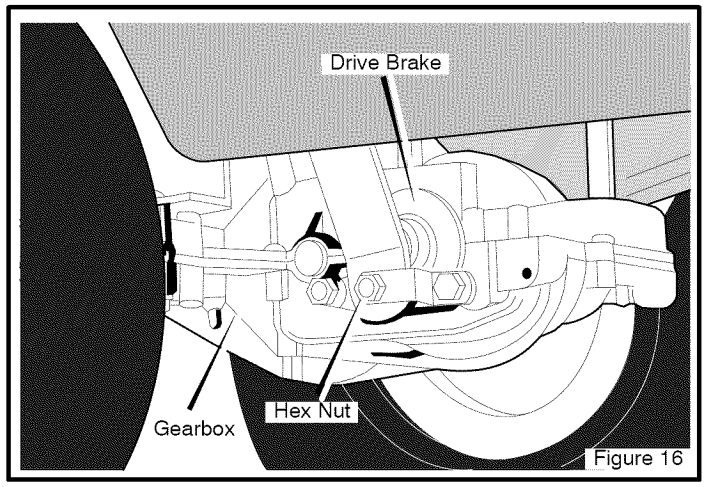

Figure 16

HOW TO CHECK AND ADJUST THE CLUTCH

If the motion drive belt is loose, the clutch will slip when; (1) going up a hill, (2) pulling a heavy load, or (3) the unit will not move forward. Adjust the clutch as follows.

WARNING: Before you make an inspection, adjustment, or repair to the unit, disconnect the wire to the spark plug. Remove the wire from the spark plug to prevent the engine from starting by accident.

1. Check the routing of the motion drive belt. Make sure the belt is installed correctly and is inside all the belt guides.
2. Remove the **cotter pin**, **washer**, and **brake spring** from the **adjustable nut** (Figure 17).
3. Disconnect the **adjustable nut** from the **brake lever assembly** and the **parking brake latch.**
4. Align the hole in the **brake lever** with the hole in the **frame**. Hold the **brake lever** in place with a 1/4 inch (6 mm) pin or bolt (Figure 17).
5. Pull the clutch rod forward until tight. Turn the **adjustable nut** until the nut will fit through the hole in the **brake lever**.
6. Assemble the **adjustable nut** to the **parking brake latch, brake lever** and **brake spring**. Fasten with the **washer** and **cotter pin**.
7. Remove the 1/4 inch (6 mm) pin or bolt.
8. If the belt still slips after the clutch has been adjusted, then the motion drive belt is worn or damaged and must be replaced. See "How To Replace The Motion Drive Belt".

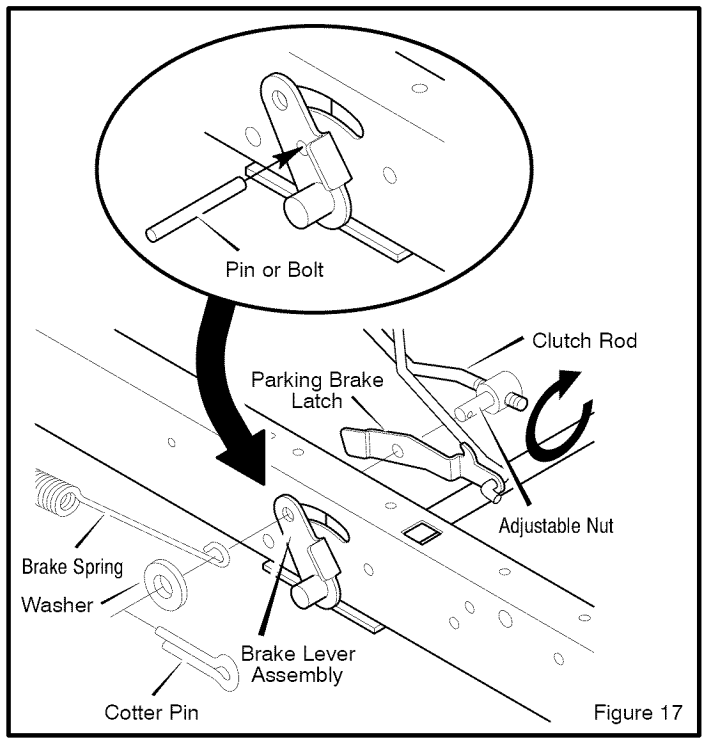

Figure 17

MAINTENANCE

HOW TO ADJUST THE SHIFT LEVER

If the NEUTRAL position on the shift lever does not match neutral on the gearbox, adjust the shift lever as follows.

1. Stop the engine.
2. Disconnect the **adjuster nut** from the **shifter bracket** (Figure 18).
3. Make sure the shift lever is in the NEUTRAL position.
4. Push the unit forward. Make sure the gearbox is in neutral.
5. To align the **adjuster nut** with the hole in the **shifter bracket**, turn the **adjuster nut**.
6. Connect the **adjuster nut** to the **shifter bracket**.
7. Make sure the NEUTRAL position on the shift lever matches neutral on the gearbox.

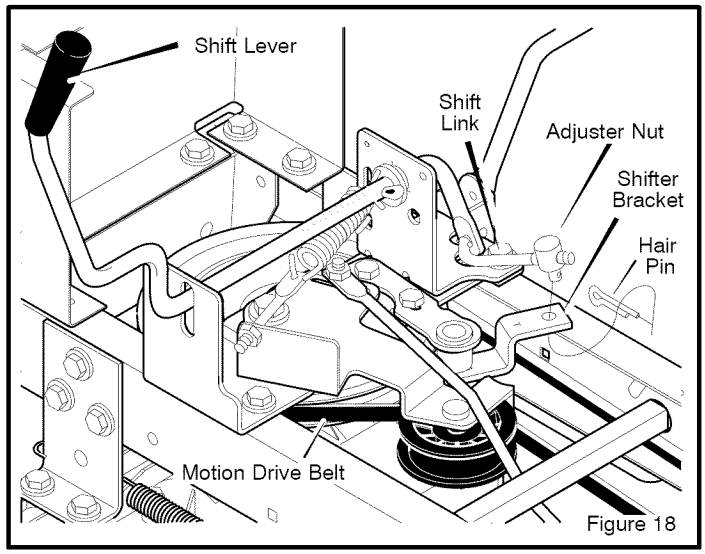

Figure 18

MAINTENANCE FREE BATTERY

HOW TO REMOVE THE BATTERY

To charge or clean the **battery**, remove the **battery** from the unit as follows.

WARNING: To prevent sparks, disconnect the black battery cable from the negative (-) terminal before you disconnect the red cable.
WARNING: The battery contains sulfuric acid which is harmful to the skin, eyes and clothing. If the acid gets on the body or clothing, wash with water.

1. Disconnect the **black cable** from the negative (-) terminal (Figure 19).
2. Disconnect the **red cable** from the **positive (+) terminal.**
3. Lift the **battery tray** and the **battery** out of the unit.

HOW TO CLEAN THE BATTERY

1. Remove the **battery**.
2. Wash the **battery** with a solution of one gallon of water and four tablespoons of baking soda (sodium bicarbonate). Make sure the solution does not get into the battery cells.
3. Clean the **terminals** and the ends of the **cables** with a wire brush.
4. Install the **battery**.
5. To prevent corrosion, apply grease to the **battery terminals**.

HOW TO CHARGE THE BATTERY

WARNING: When you charge the battery, do not smoke. Keep the battery away from any sparks. The fumes from the battery acid can cause an explosion.

1. Before you charge the **battery**, remove the **battery**.
2. To charge the **battery**, use a 12 volt battery charger. Charge at a rate of 6 amperes for 1 hour.
3. Install the **battery.**

WARNING: To prevent sparks, fasten the red cable to the positive (+) terminal before you connect the black cable.

4. Fasten the **red cable** to the **positive (+) terminal** with the fasteners as shown.
5. Fasten the **black cable** to the negative (-) terminal with the fasteners as shown.

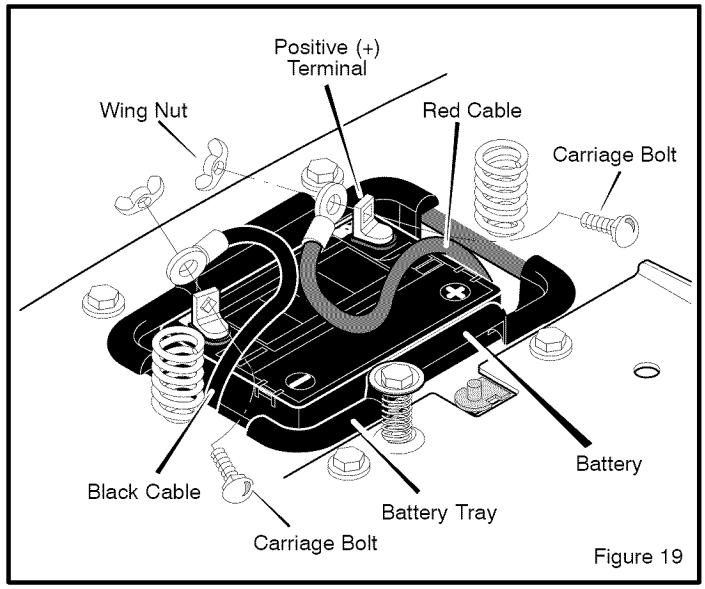

Figure 19

MAINTENANCE

WHERE TO LUBRICATE

Apply grease with a brush to the areas shown.

Lubricate the areas shown with engine oil.

NOTE: Apply grease to the steering gear assembly.
CAUTION: If the unit is operated in dry areas that have sand, use a dry graphite spray to lubricate the unit.

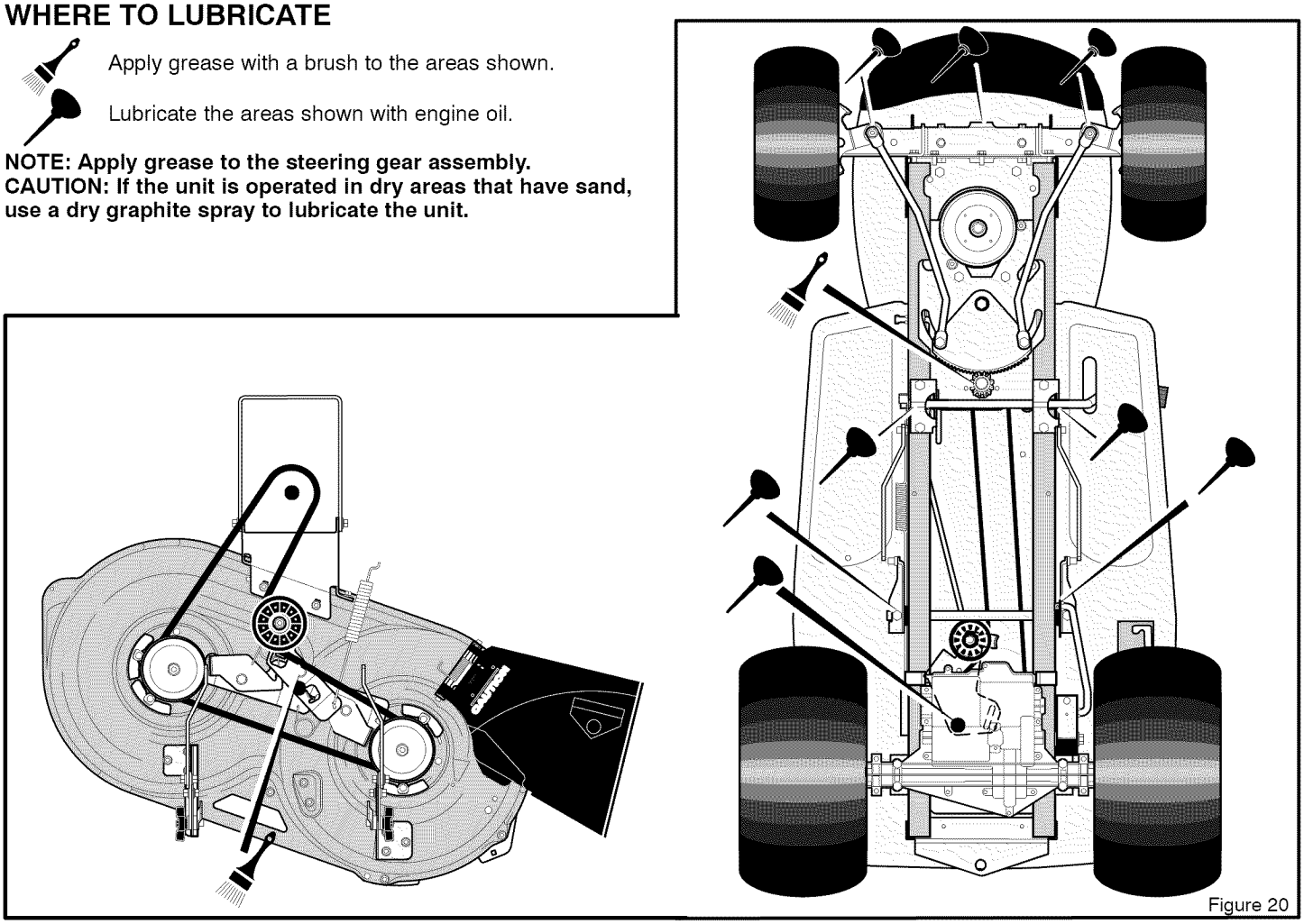

Figure 20

HOW TO CHECK THE FUEL FILTER

NOTE: Before you replace the fuel filter or the fuel line, the fuel tank must be empty.

If the **fuel filter** is dirty, the engine will run rough and have less performance. Remove the old filter (Figure 21). Replace the old filter with a new filter. Use an original equipment part. See an authorized service dealer in your area.

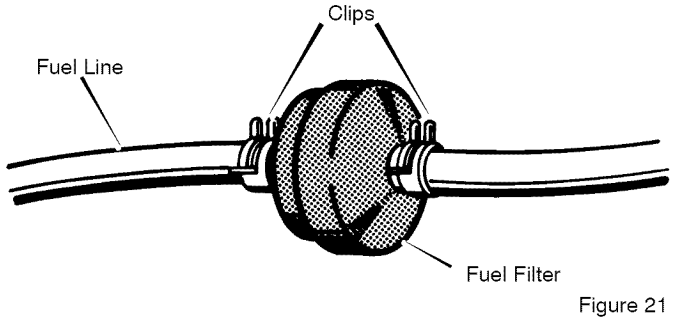

Figure 21

CHECK THE TIRES

Check the air pressure in the tires. Tires with too much air pressure will cause the unit to ride rough. Also, the wrong air pressure will keep the mower housing from cutting level. The correct air pressure is shown on the side of the tire.

MAINTENANCE

HOW TO REMOVE THE MOWER HOUSING

1. Move the **blade rotation control** to the DISENGAGE position.
2. Move the **lift lever** to the level adjustment position (Figure 22).

WARNING: The lift lever is spring loaded. Make sure the lift lever is locked in the LEVEL ADJUSTMENT position.

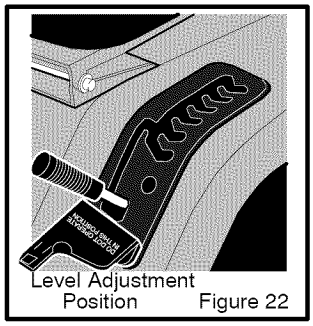
Level Adjustment Position Figure 22

3. Remove the hair pins and the washers from the **adjuster arms** (Figure 23). See illustrations "C" and "D".
4. Remove the hair pins and washers from the **suspension links**. See illustrations "A" and "B".
5. Disconnect the **extension spring** from the **blade control rod**. See illustration "E".
6. Disconnect the **front hanger** from the axle support. See illustration "F".
7. Remove the **mower drive belt** from the **stack pulley**.
8. Pull the mower housing away from the right side of the unit.
9. To operate without the mower housing, move the lift lever to the TOP position.

HOW TO INSTALL THE MOWER HOUSING

1. Push the mower housing under the right side of the unit.
2. Put the **mower drive belt** around the **stack pulley**. Make sure the "V" side of the **mower drive belt** is against the **stack pulley**. Also, make sure the **mower drive belt** is not twisted.
3. Attach the **front hanger** to the axle support with the **hanger rod.** Fasten with the fasteners as shown. See illustration "F".
4. Make sure the **mower drive belt** is between the **stack pulley** and the two **belt guides**. See illustration "G".
5. Attach the **suspension links** to the **lifter assembly**. Fasten with the washers and hair pins. See illustrations "A" and "B".
6. Attach the right and the left **adjuster arms** to the suspension brackets. Fasten with the washers and hair pins. See illustrations "C" and "D".
7. Attach the **extension spring** to the **blade control rod**. See illustration "E".
8. Move the **blade rotation control** to the ENGAGE position. Make sure the **mower drive belt** is inside all the **belt guides.**
9. Make sure the mower housing is level. See the instructions on "How To Level The Mower Housing".
10. Check the operation of the **blade rotation control**. See the instructions on "How To Adjust The Blade Rotation Control".

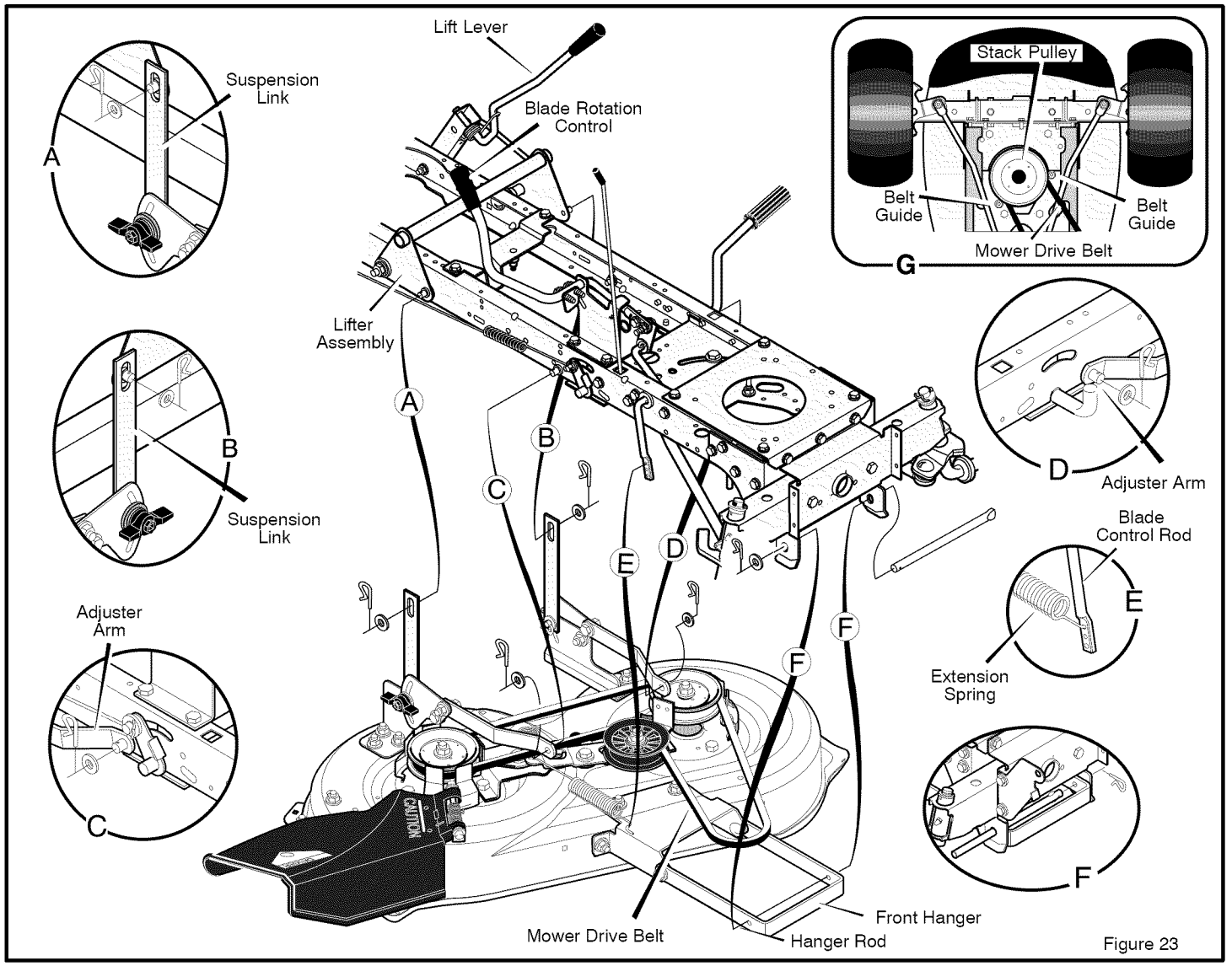

Figure 23

HOW TO LEVEL THE MOWER HOUSING

If the mower housing is level, the blade will cut easier and the lawn will look better.

WARNING: Before you make an inspection, adjustment, or repair to the unit, disconnect the wire to the spark plug. Remove the spark plug wire to prevent the engine from starting by accident.

1. Make sure the unit is on a hard flat surface.

2. Check the air pressure in the tires. If the air pressure is incorrect, the mower housing will not cut level. The correct air pressure is shown on the side of the tire.

   IMPORTANT: On models equipped with gauge wheels, the gauge wheels must be removed to correctly adjust the level of the mower housing.

3. Some models have gauge wheels on the mower housing. If equipped, remove the gauge wheels.

4. Open the **cover.**

5. Move the **lift lever** to the LEVEL ADJUSTMENT position (Figure 24).

WARNING: The lift lever is spring loaded. Make sure the lift lever is locked in the LEVEL ADJUSTMENT position.

6. Loosen the left and right **adjuster knobs** (Figure 25). Push down on each side of the mower housing. Make sure both sides of the mower housing are setting on a flat surface. Also, make sure the lift links are loose and can easily move up or down.

7. Push down on the **lift links** and tighten the left and right **adjuster knobs** (Figure 25). Make sure the **adjuster knobs** are tight. If necessary, use a wrench to tighten the **adjuster knobs.** For plastic **adjuster knobs,** tighten to a torque of 7 foot pounds (9,5 N-m). For metal **adjuster knobs,** tighten to a torque of 10 foot pounds (13,5 N-m).

8. Raise the **lift lever** from the LEVEL ADJUSTMENT position to a CUTTING HEIGHT position (Figure 26).

9. Close the **cover.**

10. If equipped, install the gauge wheels.

11. Mow for a short distance. If the height of cut is not level, repeat the above steps.

CAUTION: Do not operate with the mower housing in the LEVEL ADJUSTMENT position. If you operate in the LEVEL ADJUSTMENT position, the mower housing and blades can be damaged.

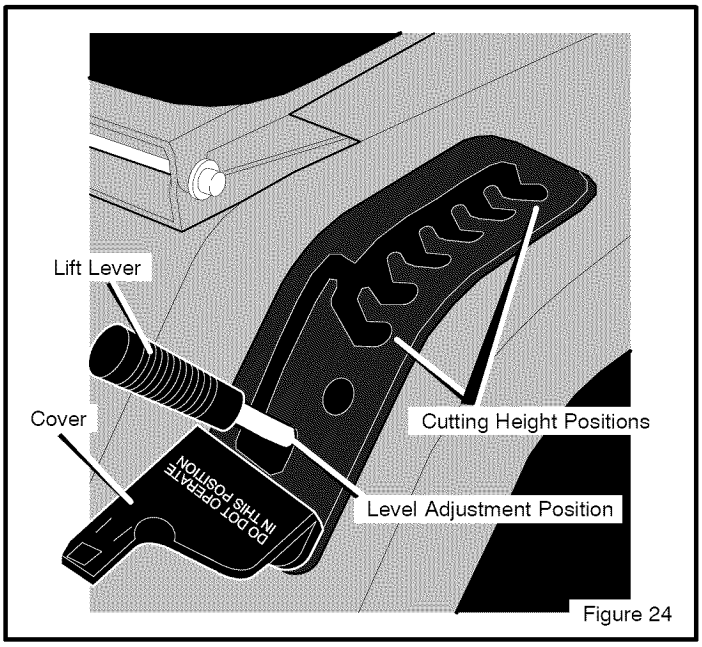

Figure 24

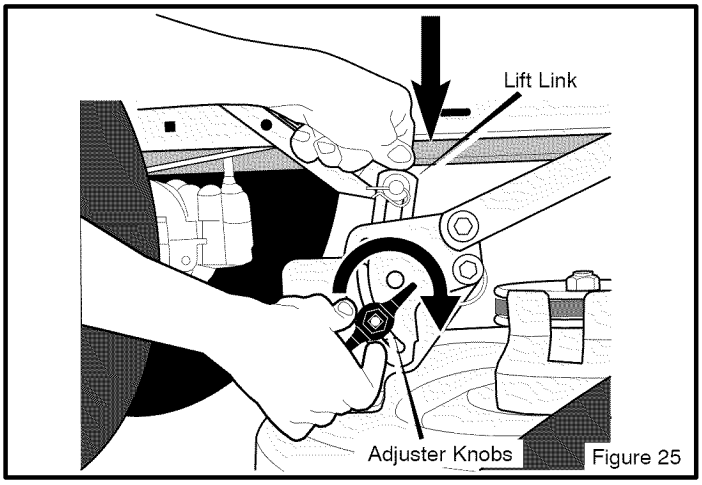

Figure 25

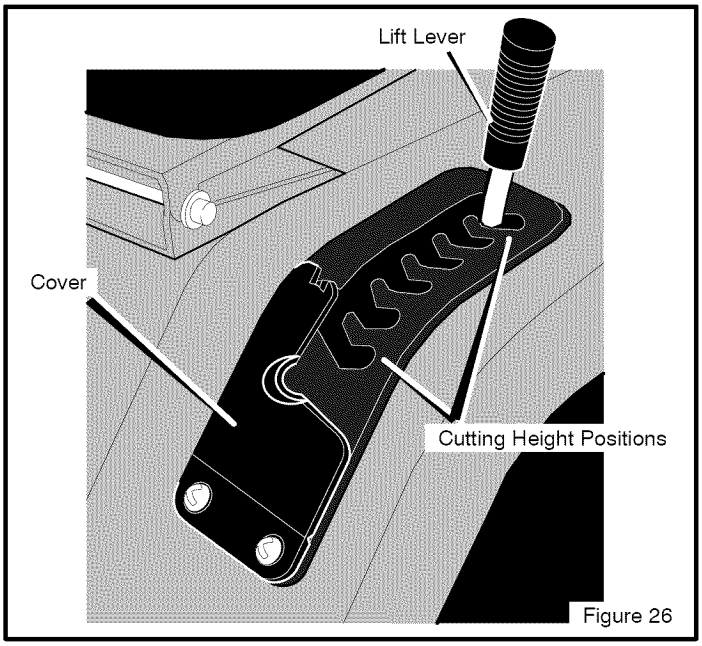

Figure 26

HOW TO REPLACE THE MOTION DRIVE BELT

REMOVAL

1. Remove the mower housing. See the instructions on "How To Remove The Mower Housing".
2. Completely push the pedal forward and engage the parking brake.
3. Remove the **idler pulley** (Figure 27).

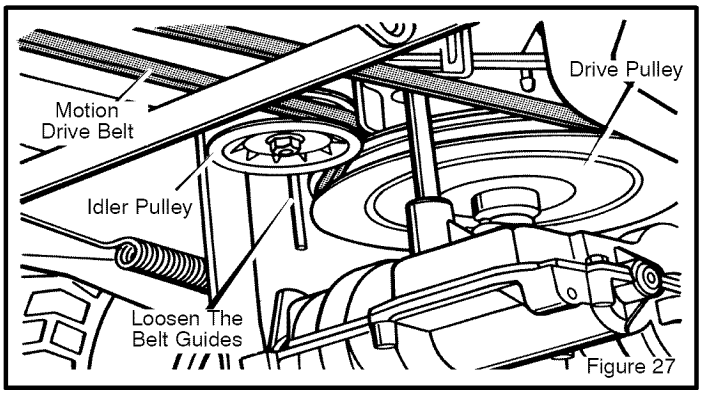

Figure 27

4. To access the **belt guides**, remove the battery and battery tray. See "How To Remove The Battery".
5. Loosen the **belt guides** at the **drive pulley** (Figure 28).

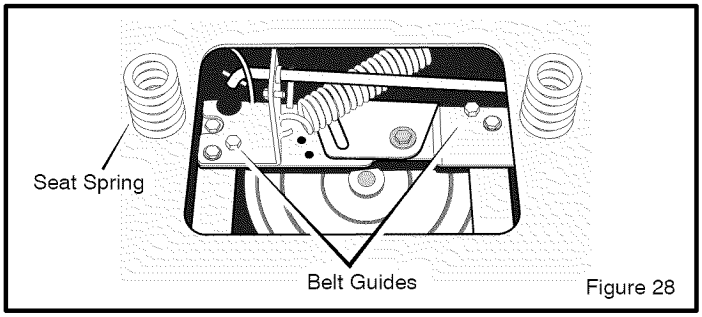

Figure 28

6. Remove the **motion drive belt** from the **drive pulley** (Figure 27).
7. Remove the **adjuster nut** from the **shifter bracket** (Figure 29). Pull the **motion drive belt** over the **shifter bracket**.

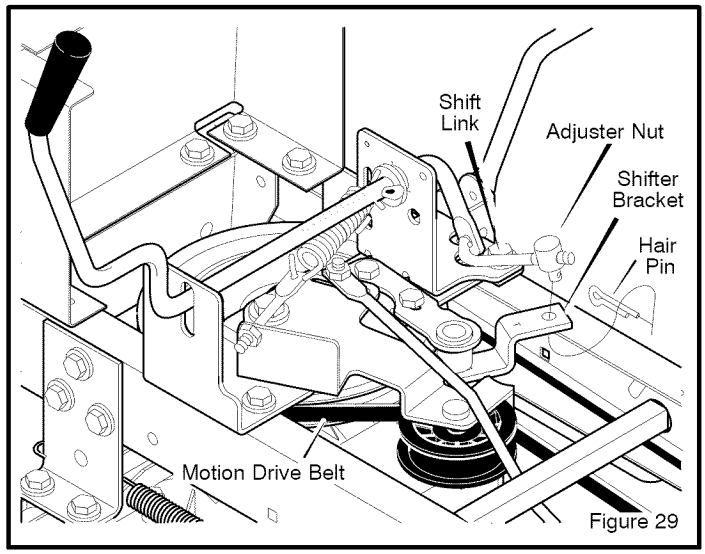

Figure 29

8. To remove the **motion drive belt** from the **stack pulley**, pull the front end of the belt under the **stack pulley** and then back between the stack pulley and the **steering plate** (Figure 30).

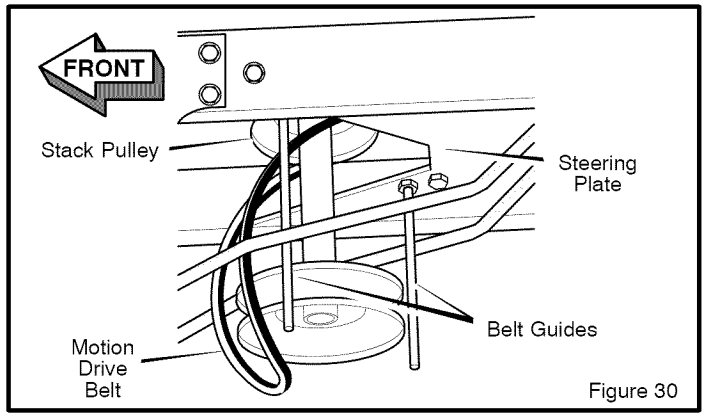

Figure 30

9. Remove the **access panel** (Figure 31).
10. Remove the two **screws** that attach the **steering shaft assembly** (Figure 31). Raise the steering wheel and **steering shaft assembly**. Pull the **motion drive belt** under the **steering shaft assembly**.

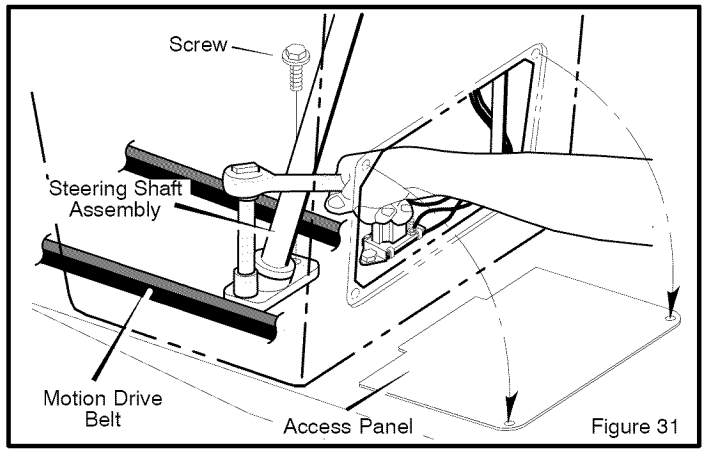

Figure 31

11. Remove the **motion drive belt**. A correct replacement part or assistance is available from an Authorized Service Center in your area.

INSTALLATION

1. Slide the **motion drive belt** between the **stack pulley** and the **belt guides** (Figure 30). Install the **motion drive belt** on the top pulley of the **stack pulley**. Make sure the "V" side of the belt is against the pulley.

2. Push the **motion drive belt** through the opening between the steering plate and the engine plate.

3. Install the end of the **motion drive belt** around the **drive pulley** (Figure 27).

4. Tighten the **belt guides** at the **drive pulley** (Figure 28).

5. Put the belt around the **idler pulley** (Figure 27, Figure 32). Assemble the **idler pulley**. Fasten the **idler pulley** with the hex nut. Make sure the flat side of the belt is against the **idler pulley**. Also, make sure the belt is not twisted.

6. Make sure the **motion drive belt** is inside all the **belt guides** (Figure 27, Figure 28).

7. Attach the **adjuster nut** and **shift link** to the **adjuster bracket** with a **hair pin** (Figure 29). See "How To Adjust The Shift Lever".

8. Attach the **steering shaft assembly** to the steering plate with two screws (Figure 31).

9. Attach the **access panel** (Figure 31).

10. Check the routing of the motion drive belt. Make sure the **motion drive belt** is installed correctly on the **idler pulley**. Make sure the **steering shaft assembly** in inside the **motion drive belt** (Figure 32).

11. Install the battery.

12. Before you use the unit, check the adjustment of the clutch. See the instructions "How To Check And Adjust The Clutch".

13. Install the mower housing. See the instructions "How To Install The Mower Housing".

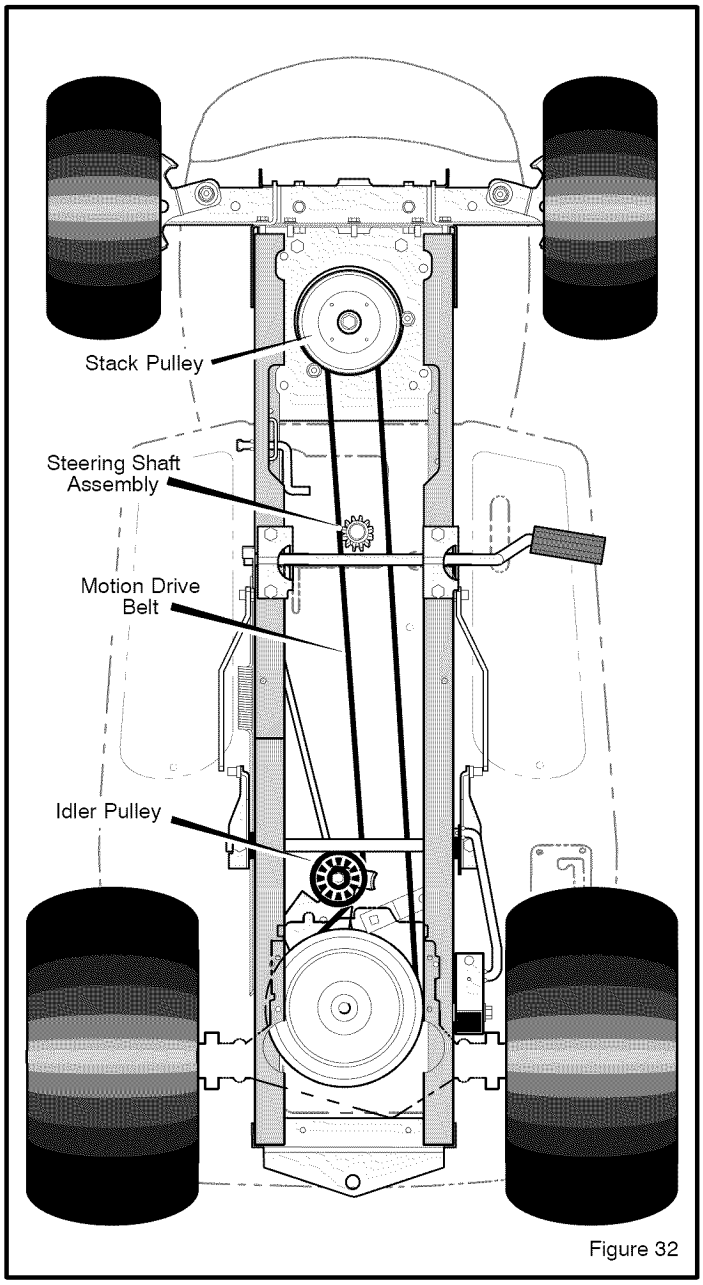

Figure 32

HOW TO REPLACE THE MOWER DRIVE BELT

1. Remove the mower housing. See the instructions on "How To Remove The Mower Housing".
2. Pull the **belt retainer** away from the **idler pulley** and remove the **mower drive belt** (Figure 33).
3. Pull the **belt retainer** away from the **right mandrel pulley** and remove the **mower drive belt**.
4. Pull the **belt retainer** away from the **left mandrel pulley** and remove the **mower drive belt**.

   NOTE: Replace the mower drive belt with an original equipment belt from an authorized service center.
5. Install the new **mower drive belt**. Pull the **belt retainer** away from the **right mandrel pulley**. Put the belt around the **right mandrel pulley.**
6. Pull the **belt retainer** away from the **left mandrel pulley**. Put the belt around the **left mandrel pulley.**
7. Pull the **belt retainer** away from the **idler pulley**. Put the flat side of the **mower drive belt** around the **idler pulley**.
8. Make sure the "V" side of the **mower drive belt** is against the mandrel pulleys as shown.
9. Install the mower housing. See the instructions on "How To Install The Mower Housing".
10. Before you mow, check the blade rotation control. See the instructions on "How To Adjust The Blade Rotation Control".

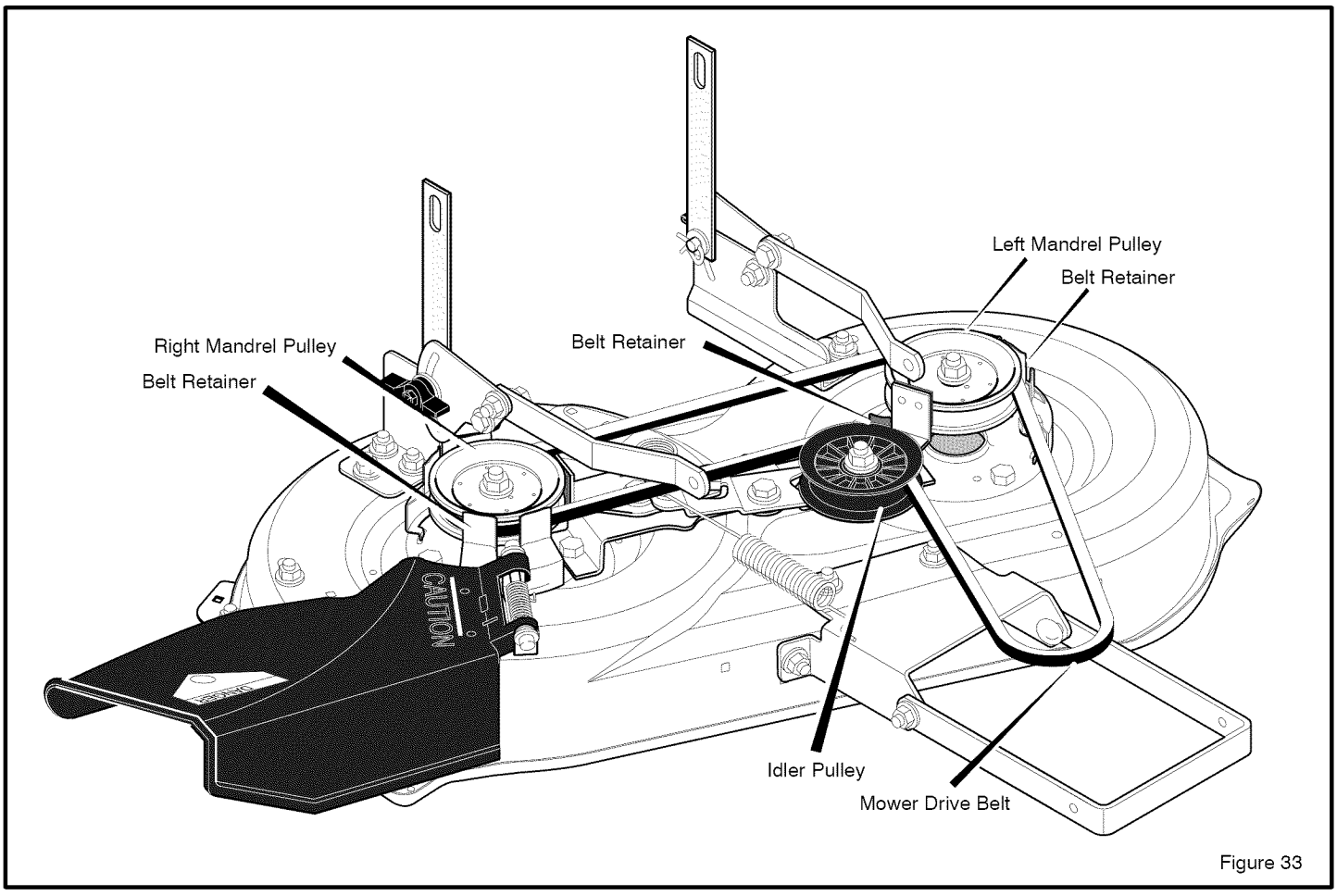

Figure 33

HOW TO INSTALL THE WHEELS

If the wheels must be removed for service, make sure they are installed as follows.

Front Wheel

1. Make sure the **valve stem** is to the outside of the tractor. Slide the **front wheel** on the **spindle** (See Figure 34).

2. Fasten the **front wheel** with **washer** and **cotter pin.** Bend the ends of the **cotter pin** apart to keep the **front wheel** on the **spindle.**

3. If your model has **hub caps**, install the **hub caps**. Make sure the **washer** hold the **hub caps** in place.

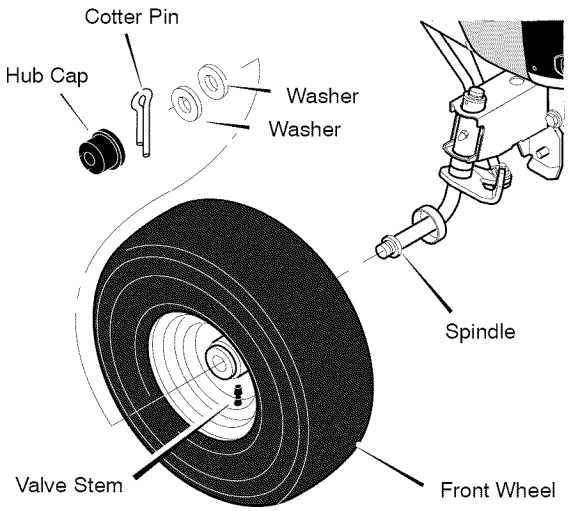

Figure 34

Rear Wheel

1. Install the **washers** and **spacer** onto the **axle** as shown in Figure 35.

2. Mount the **square key** in the **key slot** (See Figure 35).

3. Make sure the **valve stem** is to the outside of the tractor. Align the slot in the **rear wheel** with the **square key**. Slide the **rear wheel** on the **axle**.

4. Fasten the **rear wheel** with **washer** and **e-ring** .

5. If your model has **hub caps**, install the **hub caps**. Make sure the **washer** hold the **hub caps** in place.

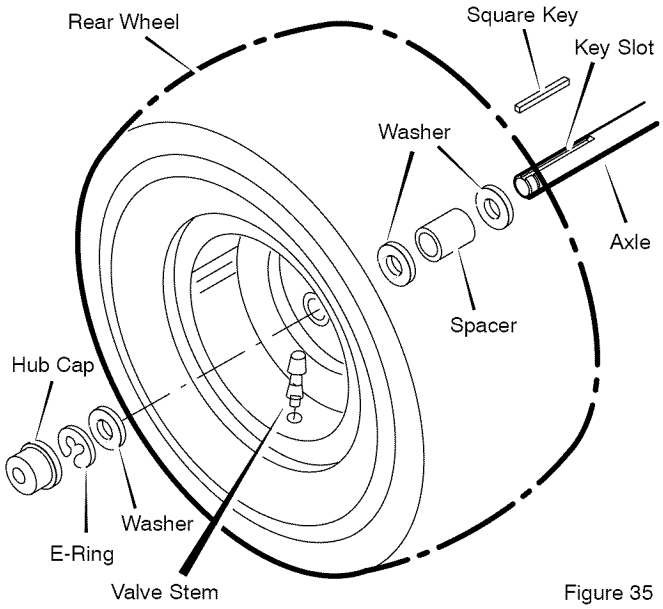

Figure 35

MAINTENANCE

HOW TO REPLACE THE FUSE

If the fuse is blown, the engine will not start. The location of the fuse is next to the battery. Remove the fuse and replace with a automotive fuse (Figure 36).

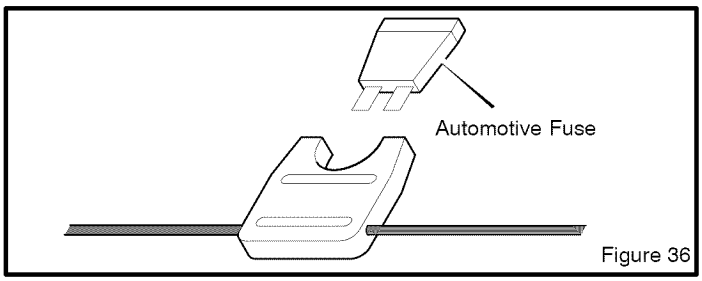

Figure 36

HOW TO REPLACE THE LIGHT BULB

1. Raise the tractor hood.
2. Turn the **light socket** until the tabs on the socket align with the notches in the **bezel** (Figure 37). Remove the **light socket**. Turn the **light bulb** and remove the bulb.
3. Install a new **light bulb**. Align the **light socket** with the notches in the **bezel** and turn the **light socket** to lock in position.

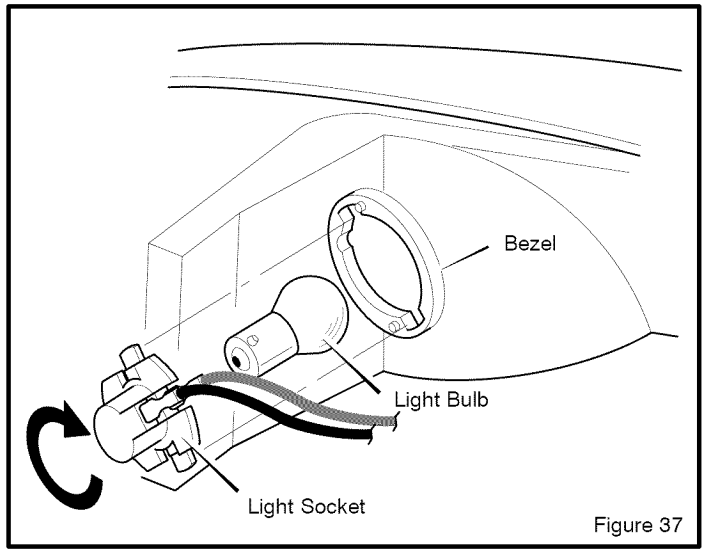

Figure 37

HOW TO CLEAN THE MOWER HOUSING

WARNING: Before you clean the mower housing, stop the engine and disconnect the wire to the spark plug.

Grass and other debris on top of the mower housing can keep the belt from working correctly. For safety and correct operation, frequently clean the top of the mower housing. Remove grass and debris from around the pulleys and other moving parts.

1. Move the lever for the blade rotation control to the ENGAGE position.
2. Clean the top of the mower housing.
3. Move the lever for the blade rotation control to the DISENGAGE position.
4. Again clean the top of the mower housing.
5. After you cut the grass, clean the bottom of the mower housing.

STORAGE (over 30 days)

At the end of each year, prepare the unit for storage as follows.

THE ENGINE

For storage information, see the the engine manufacturer's instructions.

THE BATTERY

1. Remove the battery.
2. Clean the battery terminals of any deposits.
3. Charge the battery. See the instructions on "How To Prepare And Charge The Battery".
4. Store the battery in a cool, dry place.

NOTE: After a long time in storage, charge the battery.

THE FUEL SYSTEM

WARNING: Do not drain the gasoline inside a building or near a fire. Do not smoke because the fumes from the fuel can cause an explosion.

1. Start the engine.
2. Run the engine until the fuel tank and the carburetor are out of fuel and the engine stops.
3. Do not leave fuel in the fuel tank or the carburetor. The fuel can damage the function of the fuel system. Some models have a **fuel drain** (Figure 38). Hold a cloth under the **fuel drain**. Push the **fuel drain** until the carburetor is empty.
4. After storage, make sure you use fresh fuel.

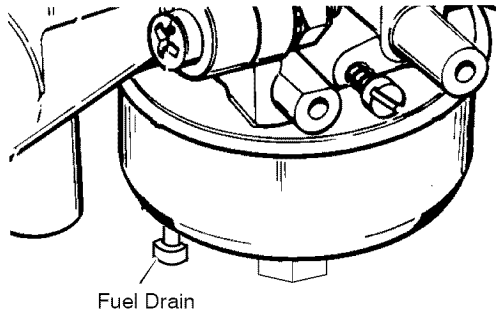

Figure 38

CLEAN THE UNIT

1. Clean the dirt and grass from the engine.
2. Clean the mower housing.

LUBRICATE THE UNIT

See the "Lubrication" instructions in this book.

TROUBLE SHOOTING CHART

PROBLEM: The engine will not start.

1. Follow the steps, "How To Start The Engine" in this book.
2. Electric-Start Models: Clean the battery terminals. Tighten the cables.
3. Drain the fuel tank. Clean the fuel line. Replace the fuel filter.
4. Remove the spark plug(s). Move the throttle to the SLOW position. Turn the ignition key to the ON position. Try to start the engine several times. Install the spark plug.
5. Replace the spark plug.
6. Adjust the carburetor.

PROBLEM: The engine will not turn over.

1. Follow the steps, "How To Start The Engine" in this book.
2. Electric-Start Models: Check the level of the acid in the battery. If needed, add water. Charge the battery.
3. Replace the fuse.
4. Check the wiring harness for damage or a loose connection. Repair the damaged wire.
5. Electric-Start Models: replace the solenoid. Recoil-Start Models: replace the module.

PROBLEM: The engine is difficult to start.

1. Adjust the carburetor.
2. Replace the spark plug.
3. Replace the fuel filter.

PROBLEM: The engine does not run smooth or has a loss of power.

1. Check the oil.
2. Clean the air filter.
3. Clean the air screen.
4. Replace the spark plug.
5. The engine is working too hard. Use a lower gear.
6. Adjust the carburetor.
7. Replace the fuel filter.

PROBLEM: The engine does not run smooth at fast speed.

1. Replace the spark plug.
2. Adjust the throttle control.
3. Clean the air filter.
4. Replace the fuel filter.

PROBLEM: The engine stops when the blades are engaged.

1. To activate the seat sensor, always sit in the middle of the seat.
2. Check the wiring harness for damage or a loose connection. Repair the damaged wire.
3. Transmission is in reverse. Before operating in reverse, move the blade rotation control to the **DISENGAGED position.**

PROBLEM: On slopes, the engine stops.

1. Mow up and down slopes. Never mow across a slope.
2. To activate the seat sensor, always sit in the middle of the seat.

PROBLEM: The engine will not idle.

1. Replace the spark plug.
2. Clean the air filter.
3. Adjust the carburetor.
4. Adjust the throttle control.
5. Drain the fuel tank. Clean the fuel line. Replace the fuel filter.

PROBLEM: A hot engine causes a decrease in power.

1. Clean the air screen.
2. Check the oil.
3. Adjust the carburetor.
4. Replace the fuel filter.

PROBLEM: Excessive vibration.

1. Replace the blade.
2. Check for loose engine bolts.
3. Decrease the air pressure in the tires.
4. Adjust the carburetor.
5. Check for a damaged belt or damaged pulley. Replace the damaged parts.

PROBLEM: The grass does not discharge correctly.

1. Stop the engine. Clean the mower housing.
2. Raise the height of cut.
3. Replace or sharpen the blade(s).
4. Move the shift lever to a slower speed.
5. Move the throttle control to the FAST position.
6. Replace the spring for the blade idler.

PROBLEM: The mower housing does not cut level.

1. Check the air pressure in the tires.
2. Adjust the level of the mower housing.
3. Check the front axle. If the front axle does not freely pivot, loosen the axle bolt(s).

PROBLEM: The mower blades will not rotate.

1. Check the mower drive belt. Make sure the belt is installed correctly.
2. Replace the mower drive belt.

PROBLEM: The unit will not move when the clutch is engaged.

1. Check the motion drive belt. Make sure the belt is installed correctly.
2. Adjust the clutch.
3. Replace the motion drive belt.

PROBLEM: The unit moves slower or stops when the clutch is engaged.

1. Adjust the clutch.
2. Replace the motion drive belt.

PROBLEM: When the clutch/brake pedal is released, belt noise can be heard.

1. Temporary belt noise does not change the operation of the unit. If belt noise is continuous, check the routing of the belt. Make sure the belt is inside all belt guides.
2. If the noise is continuous, adjust the clutch.

PROBLEM: The rear wheels spin over uneven terrain.

1. Check the front axle. If the front axle does not freely pivot, loosen the axle bolt(s).

PROBLEM: The engine stops when the operator leaves the seat.

1. This is normal. The operator presence system is designed to allow operation only if the operator is in the seat.

PROBLEM: The engine stops when selecting reverse travel.

1. Before selecting reverse travel, move the blade rotation control to the DISENGAGE position. See the Operation section for details.

PROBLEM: The transaxle is difficult to shift between gears with the engine running and the clutch depressed.

1. Check the clutch adjustment to make sure the belt stops when the clutch pedal is depressed with the transaxle in (N) neutral.
2. Check the belt guides around the transaxle drive pulley. Make sure the belt guides do not touch the pulley.

HOW TO ORDER REPAIR PARTS

Only use a factory repair part. Repair parts, except for the engine or the transmission, are available from the store where the unit was purchased, a service shop recommended by the store, or an authorized service shop found in the yellow pages of the telephone directory.

If you cannot get a repair part or service as described above, call or write to the Central Parts Distributor shown below. When you order, include the following information: (1) Complete Model Number (see nameplate), (2) Date of Manufacture, (3) Complete Part Number, (4) Description, (5) Quantity. Repair parts for the engine or the transmission are available from the manufacturer's authorized service center found in the yellow pages of the telephone directory. See the individual engine or transmission warranties.

If you are unable to obtain parts or service in the manner outlined above, then contact:

USA

MURRAY, INC., Outdoor Power Equipment, Customer Service Dept., P.O. Box 268, Brentwood, TN 37027 (1-800-251-8007)

CANADA

MURRAY CANADA, INC., Factory Customer Service, 1195 Coutneypark Drive East, Mississauga, Ont. L5T-1R1 (1-800-661-6662)

MURRAY, INC. LAWN MOWER CENTRAL PARTS DISTRIBUTORS

BILLIOU'S, INC.
1343 South Main St.
Porterville, CA. 93257
(559) 784-4102 1-877-245-5468
FAX 1-800-226-7337
www.billious.com
Arizona, California, Hawaii, Nevada

BROWN & WISER, INC.
9991 S.W. Avery Street
Tualatin, OR. 97062
(503) 692-0330 1-800-882-4782
FAX (503) 691-2041
Alaska, Idaho (counties Ada, Adams, Benewah, Boise, Bonner, Boundry, Canyon, Clearwater, Elmore, Gem, Idaho, Kooten, Latah, Lewis, Nez Perce, Owyee, Payette, Ravalli, Shoshone, Valley, Washington), ***Montana*** (counties Flathead, Lake, Lincoln, Mineral, Missoulo, Ravalli, Sanders), ***Oregon, Washington***

CPT CANADA POWER TECHNOLOGY LIMITED
Mississauga
161 Watline Avenue
Mississauga, Ontario
L4Z-1P2
(905) 890-6900 1-800-861-9559

Edmonton
101-10411-178th Street
Edmonton, Alberta
T5S 1R5
(780) 453-5791 1-800-861-9559

Ville St-Laurent
234 Migneron Street
Ville St-Laurent, Quebec
H4T 1Y7
(514) 731-3559 1-800-861-9559
Canada

FRANK EDWARDS CO.
3626 Parkway Blvd.
West Valley, UT 84120
1-800-318-0201
FAX 1-801-736-8067
Colorado, Idaho (counties Bannock Bearlake, Bingham, Blaine, Booneville, Butte, Camas, Caribou, Cassia, Custer, Franklin, Fremont, Gooding, Jefferson, Jerome, Lemhi, Lincoln, Madison, Minidoka, Oneida, Power, Teton, Twin Falls) ***Montana*** (all counties except Flathead, Lake, Lincoln, Mineral, Missoulo, Ravalli, and Sanders), ***Utah, Wyoming***

GARDNER, INC.
3641 Interchange Road
Columbus, OH. 43204
1-800-848-8946
FAX 1-800-626-4735
Alabama, Connecticut, Delaware, District of Columbia, Florida, Georgia, Illinois, Indiana, Kentucky, Louisiana, Maine, Maryland, Massachusetts, Michigan (except upper Peninsula), ***Mississippi, New Hampshire, New Jersey, New York, North Carolina, Ohio, Pennsylvania, Rhode Island, South Carolina, Tennessee, Vermont, Virgina, West Virginia***

Puerto Rico

GULF COAST ENGINE, INC.
4202 Russell Dr.
Corpus Christi, TX. 78408
1-800-825-6999
FAX 1-888-888-7036
New Mexico, Oklahoma, Texas, Mexico

OSCAR WILSON ENGINE & PARTS, INC. ENGINE, INC.
826 Lone Star Drive.
O'Fallon, MO 63366
1-800-873-6722 or 1-634-978-1313
FAX: 1-800-873-6720
Arkansas, Iowa, Kansas, Missouri, Nebraska

WISCONSIN MAGNETO, INC.
1000 W. Donges Bay Road
Suite 100
Milwaukee, WI. 53209-5920
1-800-733-7388
FAX 1-800-733-0127
Michigan (upper Peninsula), ***Minnesota, North Dakota, South Dakota, Wisconsin***

MODEL 405000x8E

REPAIR PARTS
CHASSIS & HOOD

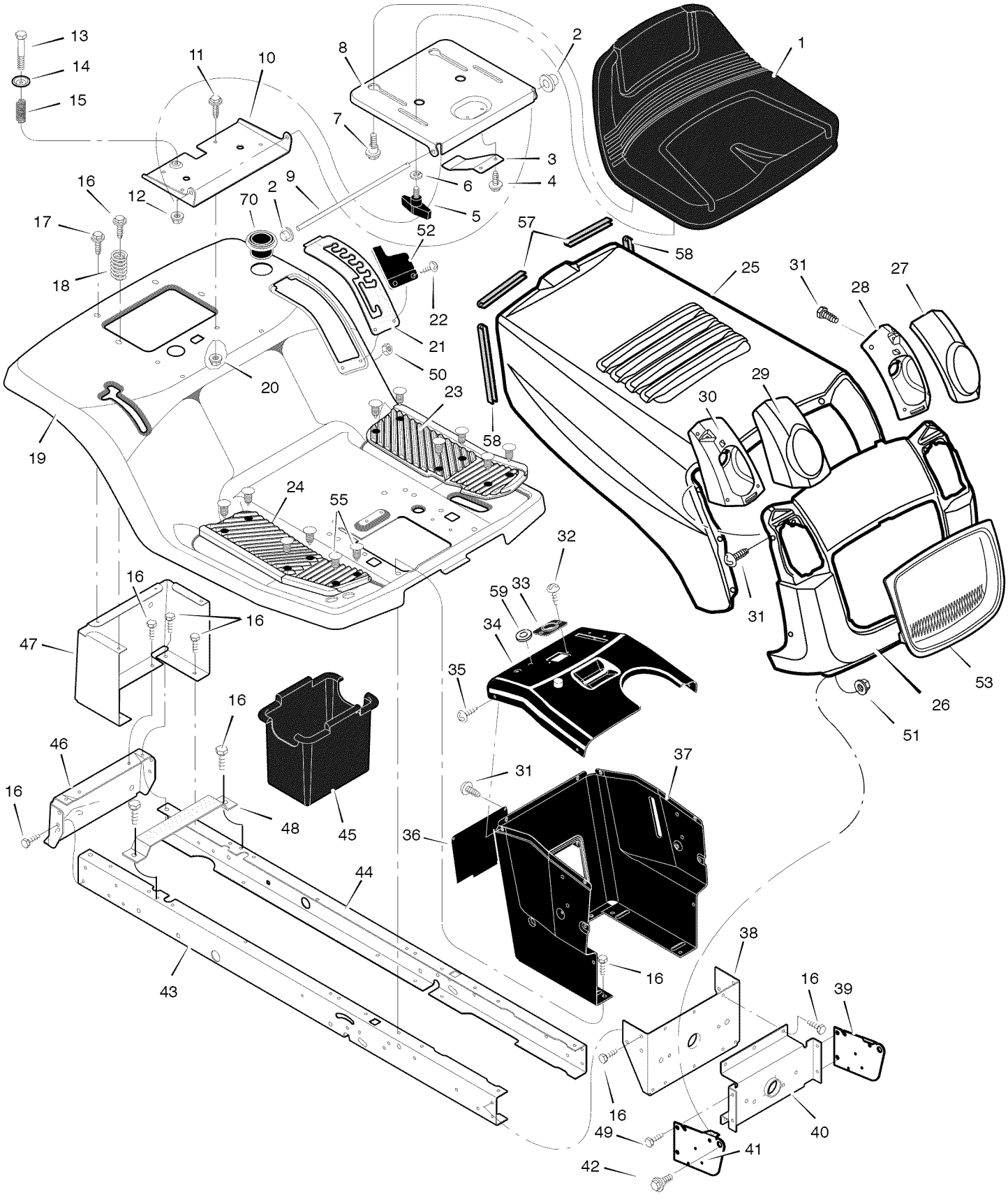

Key No.	Part No.	Description
1	690566	Seat
2	028x23	Cap, Push 0n
3	094057	Spring
4	26x229	Screw
5	1001054	Bolt, Wing
6	017x47 Z	Washer
7	009x56	Bolt, Shoulder
8	094154E700	Support, Seat
9	094156 Z	Rod, Pivot
10	1001648E700	Bracket, Pivot
11	001x45	Bolt
12	015x89	Nut
13	009x55	Bolt, Shoulder
14	094155 Z	Washer
15	164x31	Spring
16	26x249	Screw
17	26x263	Screw
18	164x30	Spring
19	1001987E700	Deck, Seat
20	15x123	Nut
21	094151E701	Plate, Index
22	009x47	Screw
23	1001582	Mat, Left
24	1001578	Mat, Right
25	1001538E700	Hood
26	1001531E700	Grille
27	1001546	Lens, Left
28	1001544E700	Housing, Left Headlamp
29	1001545	Lens, Right
30	1001543E700	Housing, Right Headlamp
31	26x270	Screw
32	26x238	Screw
33	1001491	Bearing, Steering
34	1001584E701	Dash
35	26x201	Screw
36	093007E701	Panel, Access
37	095318E701	Support, Dash
38	1001270E701	Bracket, Rear Hanger
39	094085E700	Support, Left Grille
40	094007E701	Axle, Hanger
41	094084E700	Support, Right Grille
42	009x58	Bolt, Shoulder
43	1001928E701	Frame, Right
44	1001927E701	Frame, Left
45	690424	Container, Battery
46	1001002E701	Plate, Hitch
47	690434E701	Panel, Rear
48	690482E701	Support, Battery
49	26x277	Screw
50	015x81	Nut
51	15x124	Nut
52	094610	Cover, Lift Detent
53	1001540	Insert, Grille
55	0193x1	Fastener, Panel
57	1001652	Trim, Hood (3.75")
58	1001653	Trim, Hood (6.5")
59	1001755	Grommet, Parking Brake
70	1001542	Holder, Cup
--	1001433	Parts Bag, Assembly
--	F-050700L	Instruction Book & Parts List

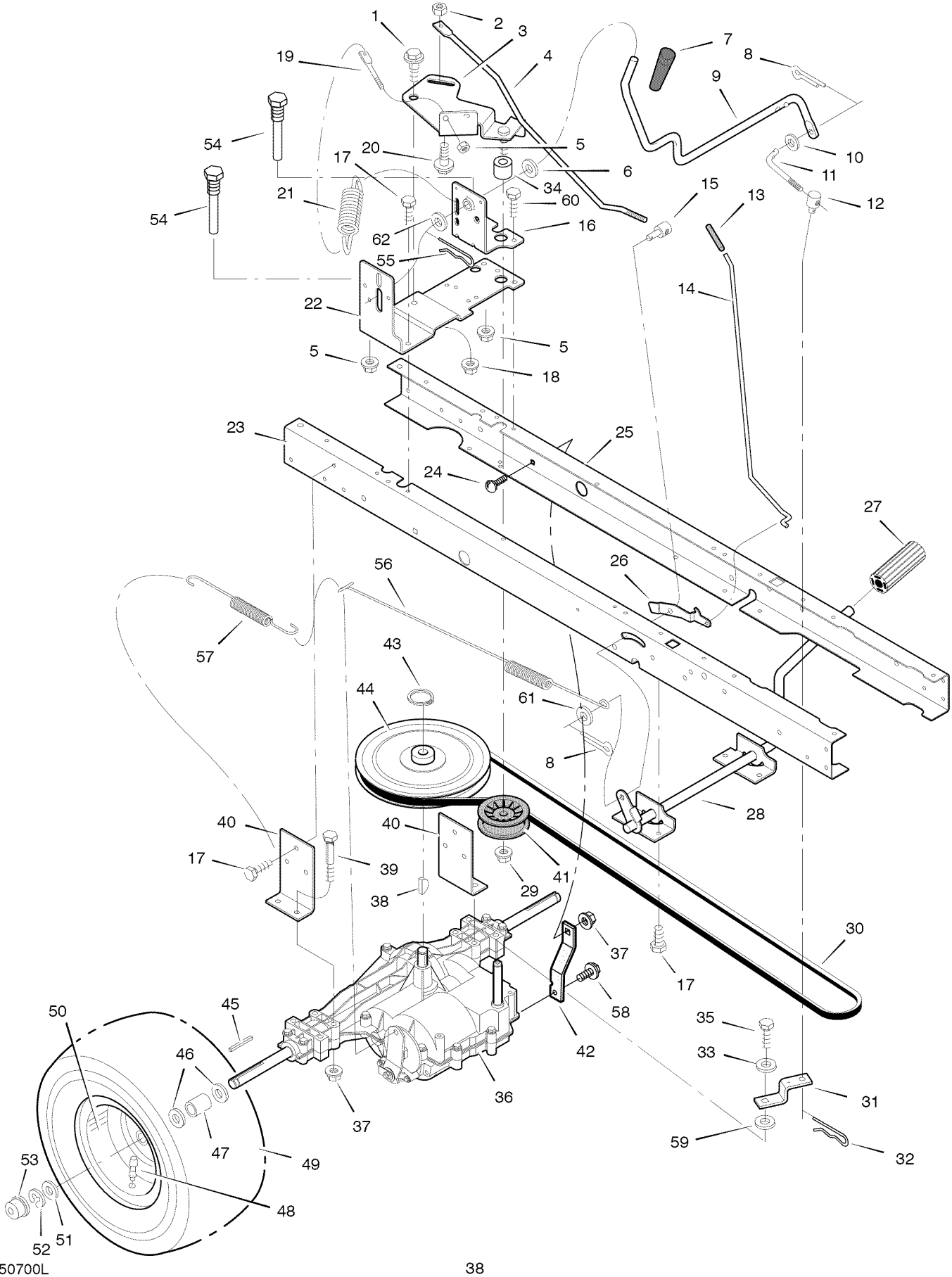
1
2
3
4
5
6
7
8
9
10
11
12
13
14
15
16
17
18
19
20
21
22
23
24
25
26
27
28
29
30
31
32
33
34
35
36
37
38
39
40
41
42
43
44
45
46
47
48
49
50
51
52
53
54
55
56
57
58
59
60
61
62

Key No.	Part No.	Description
1	009x39	Bolt, Shoulder
2	015x89	Nut, Hex
3	690173 Z	Arm, Idler
4	094041 Z	Rod, Clutch
5	015x79	Nut
6	17x102	Washer
7	092697	Grip
8	030x20	Pin, Cotter
9	094043 Z	Lever, Shift
10	017x47 Z	Washer
11	094044 Z	Link, Shift
12	021920 Z	Nut, Adjuster
13	091079	Grip
14	1001245 Z	Rod, Parking Brake
15	094815 Z	Nut, Adjuster
16	1001303 Z	Bracket, Shift Pivot
17	26x249	Screw
18	015x84	Nut
19	094042 Z	Mount, Stud Spring
20	009x54	Bolt, Shoulder
21	165x116	Spring, Extension
22	1001978E701	Bracket, Right Shifter
23	1001928E701	Frame, Right
24	002x53	Bolt, Carriage
25	1001927E701	Frame, Left
26	094045 Z	Latch, Parking Brake
27	021544	Pedal
28	094038E700	Lever, Brake/Clutch
29	015x98	Nut
30	037x87	Belt, Motion Drive
31	1001825 YZ	Yoke, DANA Shift
32	0031x6	Pin, Hair
33	017x38	Washer
34	690369	Spacer
35	06x105	Bolt
36	†	Transaxle, DANA †
37	015x88	Nut
38	020697	Key, Woodruff
39	01x155	Bolt
40	094008E701	Bracket, Transaxle
41	690409	Pulley
42	094433E700	Bracket, Transaxle Support
43	0011x7	E-Ring
44	095094	Pulley, Drive
45	021553	Key, Square
46	17x160	Washer
47	1401103 Z	Spacer, Transaxle
48	024373	Stem, Valve
49	091923	Tire *
--	407049	Tube
50	092288-601	Wheel & Tire Assembly
51	17x195	Washer
52	0011x3	E-Ring
53	094618	Hub Cap
54	093349	Guide, Belt
55	0031x4	Pin, Hair
56	165x115	Spring, Extension
57	165x92	Spring, Extension
58	26x216	Screw
59	17x148	Washer
60	26x267	Screw
61	17x169	Washer
62	17x165	Washer

* When you order a tire, make sure to give the brand name of the tire so that the tread pattern on the tire will match.

† For information on Replacement Parts contact the transaxle manufacturer.

MODEL 405000x8E

REPAIR PARTS
STEERING

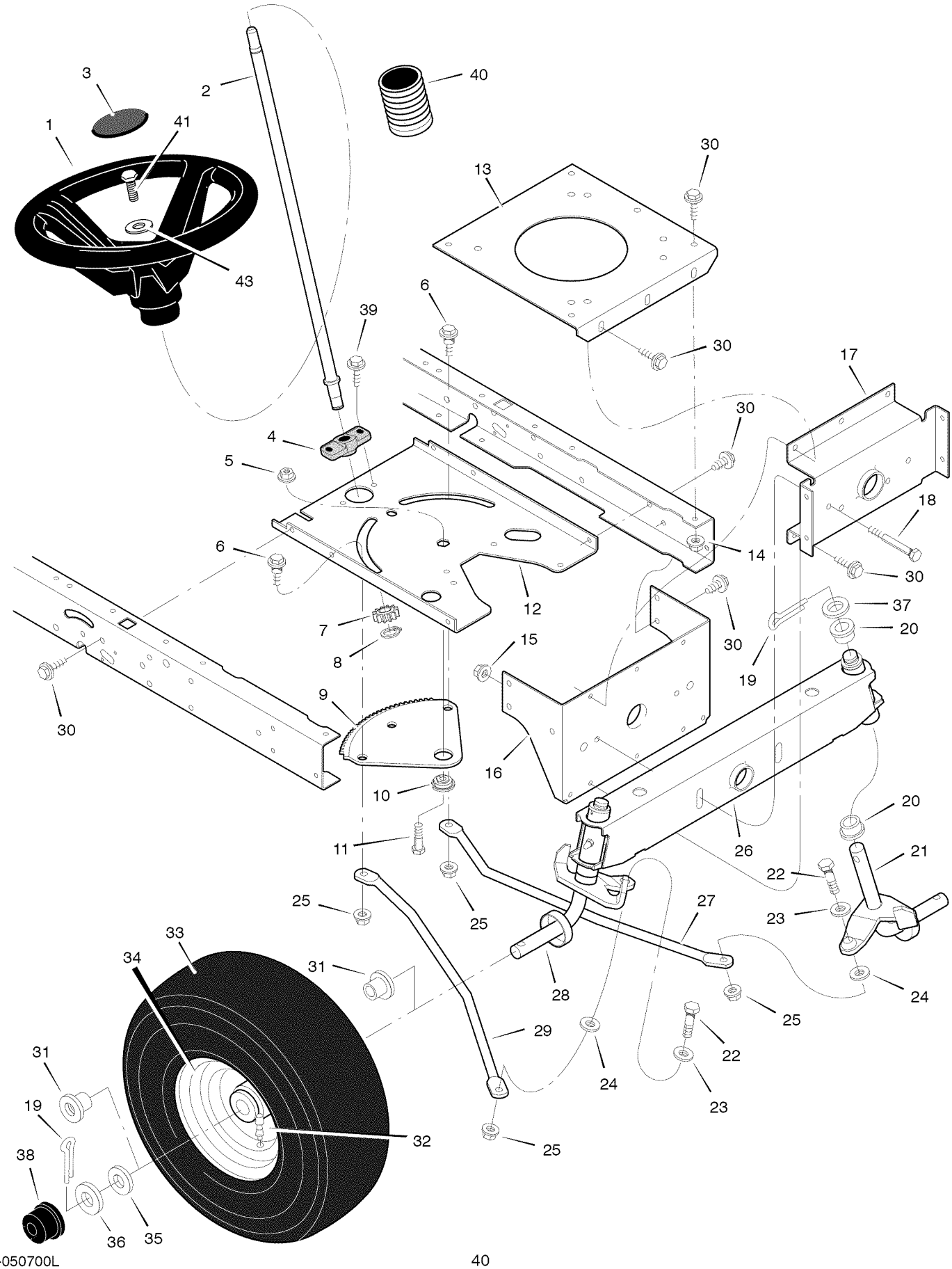

F-050700L

Key No.	Part No.	Description
1	095336	Wheel, Steering
2	690337	Post, Steering
3	095338	Cap, Steering Wheel
4	094124	Bearing †
5	15x111	Nut, Flange †
6	009x57	Bolt, Shoulder
7	1001893	Gear, Pinion †
8	011x25	Ring, Snap †
9	094121	Gear, Sector
10	094123	Bearing
11	001x84	Bolt
12	1001121E701	Plate, Steering
13	094006E700	Plate, Engine
14	015x88	Nut, Flange
15	15x118	Nut, Flange
16	1001270E700	Bracket, Hanger
17	94007E701	Axle, Hanger
18	01x146	Bolt
19	030x49	Pin, Cotter
20	690150	Bearing
21	094576E701	Spindle Assembly, Left
22	01x111	Bolt
23	17x104	Washer
24	017x53 Z	Washer
25	015x84	Nut, Flange
26	690210E701	Axle Assembly
27	095329E701	Drag Link, Left
28	094575E701	Spindle Assembly, Right
29	095328E701	Drag Link, Right
30	26x249	Screw
31	091334	Bearing, Wheel
32	024373	Stem, Valve
33	091912	Tire *
--	407924	Tube
34	1001840-601	Wheel andTire Assembly
35	17x195	Washer
36	17x192	Washer
37	17x113	Washer
38	094618	Hub Cap
39	26x267	Screw
40	092059	Bellows
41	0025x3	Bolt
43	17x146	Washer

* When you order a tire, make sure to give the brand name of the tire so that the tread pattern on the tire will match.

† These parts are included when ordering Key number 2.

REPAIR PARTS
MOWER HOUSING SUSPENSION

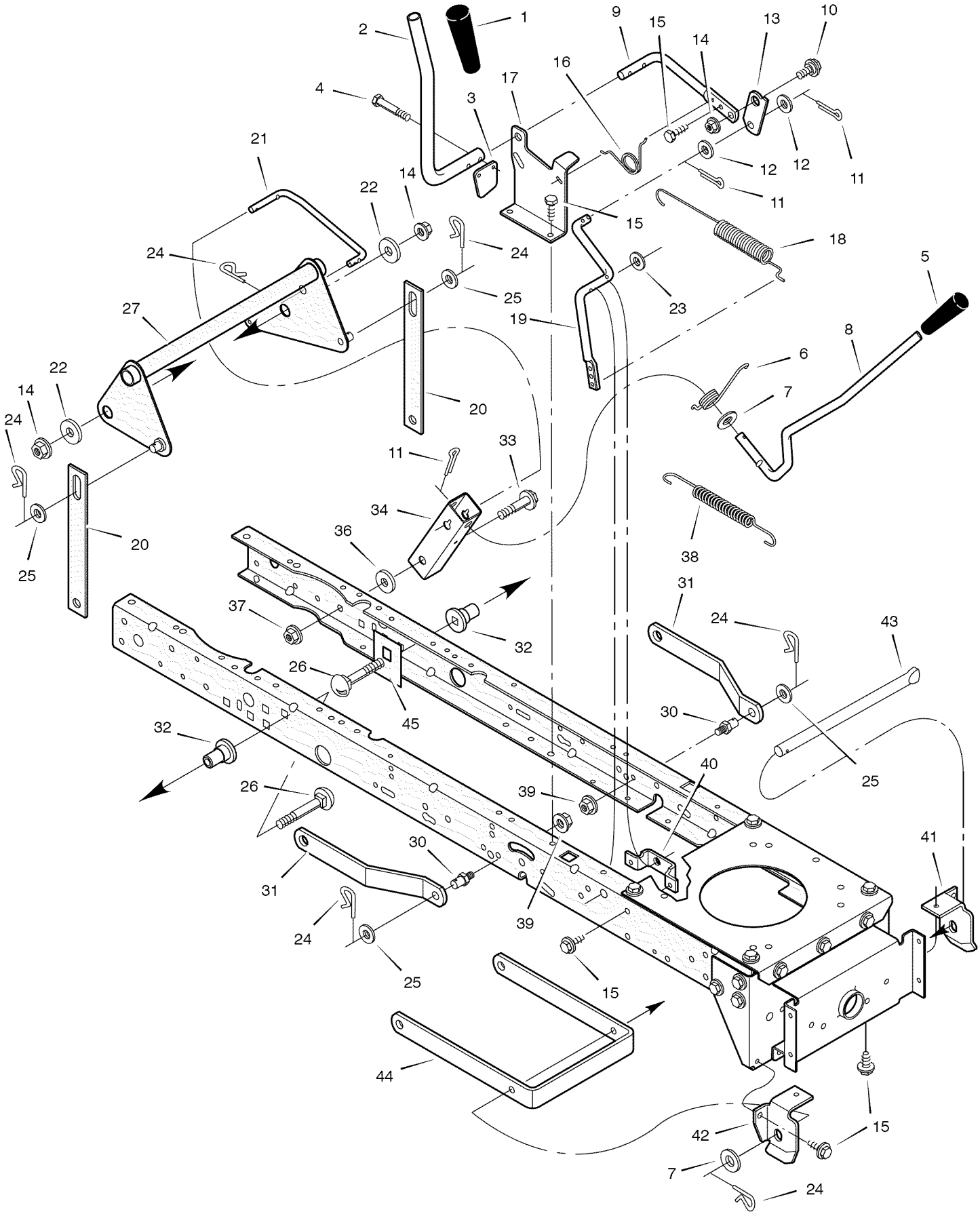

REPAIR PARTS
MOWER HOUSING SUSPENSION

Key No.	Part No.	Description
1	092698	Grip
2	094157 Z	Handle
3	094022 Z	Pad, Switch
4	0025x3	Bolt
5	092697	Grip
6	166x40	Spring
7	17x103	Washer
8	690533	Handle, Lift
9	094017 Z	Lever, PTO
10	009x39	Bolt, Shoulder
11	030x20	Pin, Cotter
12	017x57	Washer
13	094004 Z	Link, PTO
14	015x84	Nut, Flange
15	26x249	Screw
16	166x39	Spring
17	094018E701	Bracket, PTO
18	165x119	Spring
19	690394E701	Crank, PTO
20	690212E701	Link, Lift
21	690122E701	Link, Lift Handle
22	17x168	Washer
23	017x57	Washer
24	0031x4	Pin, Hair
25	017x91 Z	Washer
26	002x85	Bolt, Carriage
27	1001111E701	Lever Assembly, Lift
30	094067	Pin
31	094055E701	Bracket, Rear Suspension
32	690151	Spacer, Lifter
33	009x53	Bolt, Shoulder
34	094015E700	Bracket, Pivot
36	17x191	Washer
37	015x84	Nut, Flange
38	165x131	Spring
39	015x68	Nut, Flange
40	094005E700	Bracket, PTO
41	094027E701	Hanger, Left Deck
42	094026E701	Hanger, Right Deck
43	094158 Z	Rod, Hanger
44	690539E701	Bracket, Suspension
45	1001098E701	Plate, Stiffening

MODEL 405000x8E

REPAIR PARTS
MOWER HOUSING

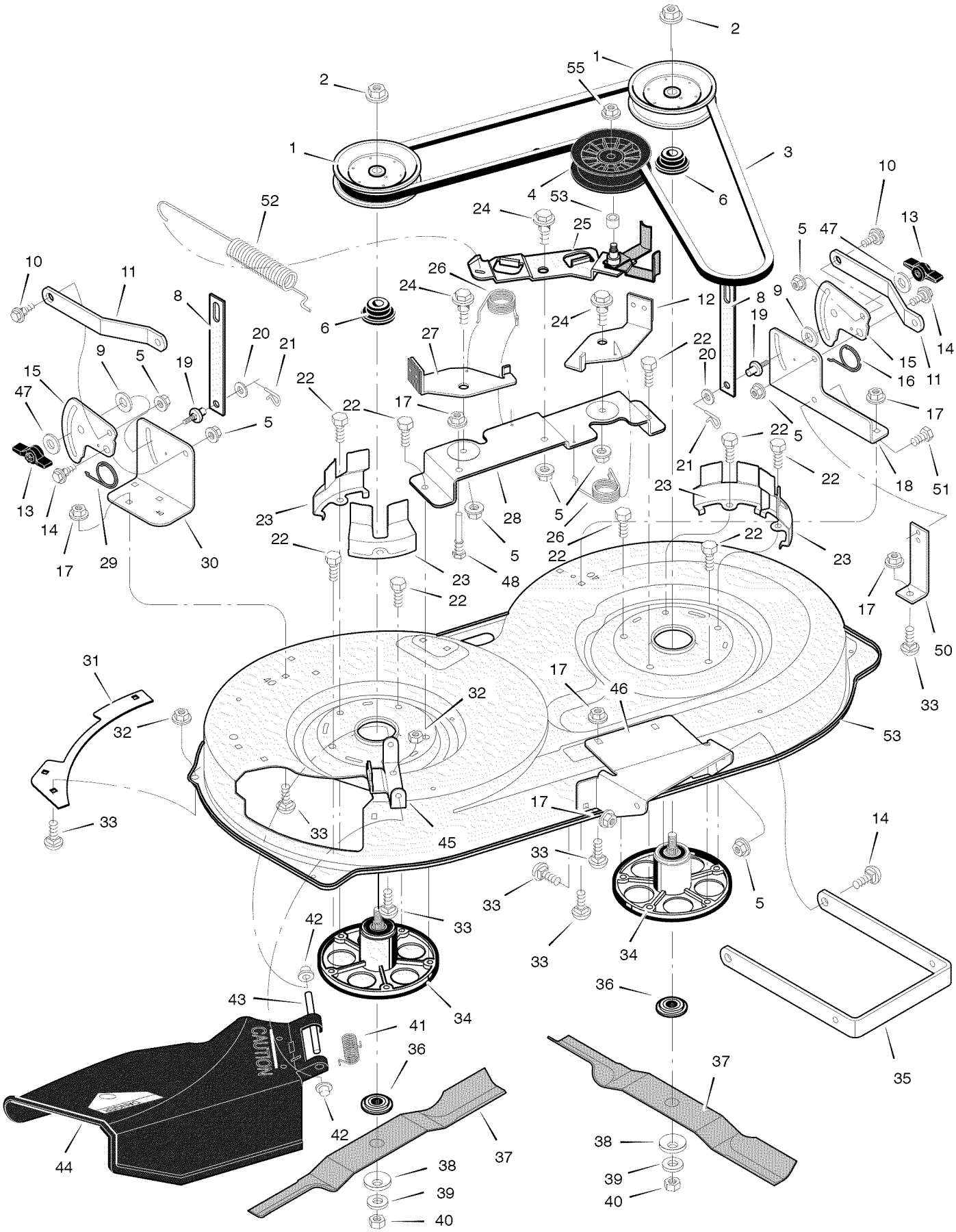

REPAIR PARTS
MOWER HOUSING

Key No.	Part No.	Description
1	092851	Pulley, Jackshaft
2	15x140	Nut, Hex
3	037x62	Belt, Mower Drive
4	690387	Pulley, Idler
5	015x84	Nut, Flange
6	1001197	Spacer, Pulley
8	690212E701	Link, Lift
9	094137	Pad, Friction
10	009x52	Bolt, Shoulder
11	094055E701	Bracket, Suspension
12	094049E701	Pad Assembly, Left Brake
13	094068	Knob
14	009x51	Bolt, Shoulder
15	094128E700	Plate, Suspension
16	166x43	Spring
17	015x79	Nut, Flange
18	094143E700	Bracket, Suspension
19	095194	Pin, Hanger
20	017x91	Washer
21	0031x4	Pin, Cotter
22	0025x7	Bolt
23	094051E701	Cover, Pulley
24	009x39	Bolt, Shoulder
25	690408E701	Arm, Idler
26	166x41	Spring
27	094047E701	Pad Assembly, Right Brake
28	094145E701	Bracket Assembly, Brake
29	166x42	Spring
30	094142E700	Bracket, Suspension
31	091770E700	Plate
32	015x88	Nut, Flange
33	002x53	Bolt, Carriage
34	1001200	Mandrell (Includes Key No. 6)
35	690539E701	Bracket, Suspension
36	690411	Adapter, Blade
37	095103E701	Blade
38	17x166	Washer
39	17x165	Washer
40	15x100	Nut
41	0166x4	Spring
42	028x23	Cap, Push On
43	094957 Z	Rod, Pivot
44	094707	Deflector Assembly
45	094956E701	Bracket, Deflector
46	094144E700	Bracket, Front Hanger
47	017x45 Z	Washer
48	094781	Guide, Belt
50	094681E700	Bracket, Support
51	26x249	Screw
52	165x119	Spring, Extension
53	690369	Spacer
54	094141E701	Housing, Blade *
55	015x98	Nut, Flange
1-55	7601044	Complete Mower Housing Assy

* Includes Key No. 17, 18, 30, 31, 32, 33, 45, 46, 47 and 51.

REPAIR PARTS
ENGINE MOUNT

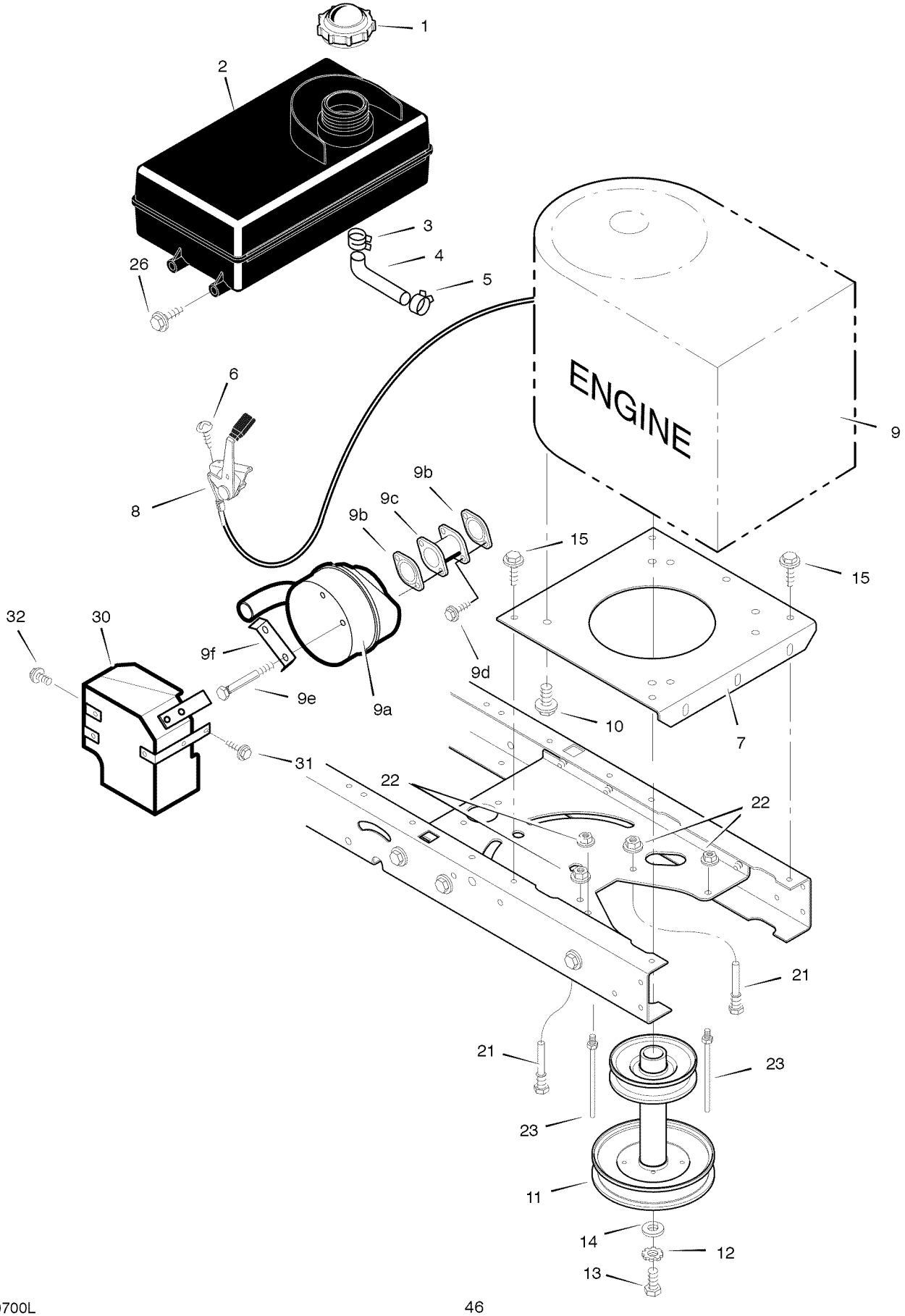

REPAIR PARTS
ENGINE MOUNT

Key No.	Part No.	Description
1	092317	Fuel Cap †
2	690280	Fuel Tank
3	095197	Hose Clamp †
4	7601033	Fuel Line (Must cut to length) †
5	095197	Hose Clamp †
6	26x201	Screw
7	094006E700	Plate, Engine
8	092371	Throttle Control
9	*	Engine, BRIGGS & STRATTON
9a	1001720	Muffler
9b	091309	Gasket, Muffler
9c	1001737	Adapter, Muffler
9d	06x103	Screw, Adapter
9e	009x59	Bolt, Muffler
9f	092378	Lock, Screw
10	0025x7	Bolt, Engine Mount
11	690439 Z	Stack Pulley Assembly
12	019x35	Lockwasher
13	01x140	Bolt, Hex
14	17x170	Washer
15	26x249	Screw
21	094384	Guide, Belt
22	015x79 Z	Nut, Flange
23	094066	Guide, Belt
26	26x253	Screw
30	1001744	Shield, Heat
31	26x263	Screw
32	06x104	Screw

* For information on Replacement Parts contact the engine manufacturer.

† These parts are included with Key number 2.

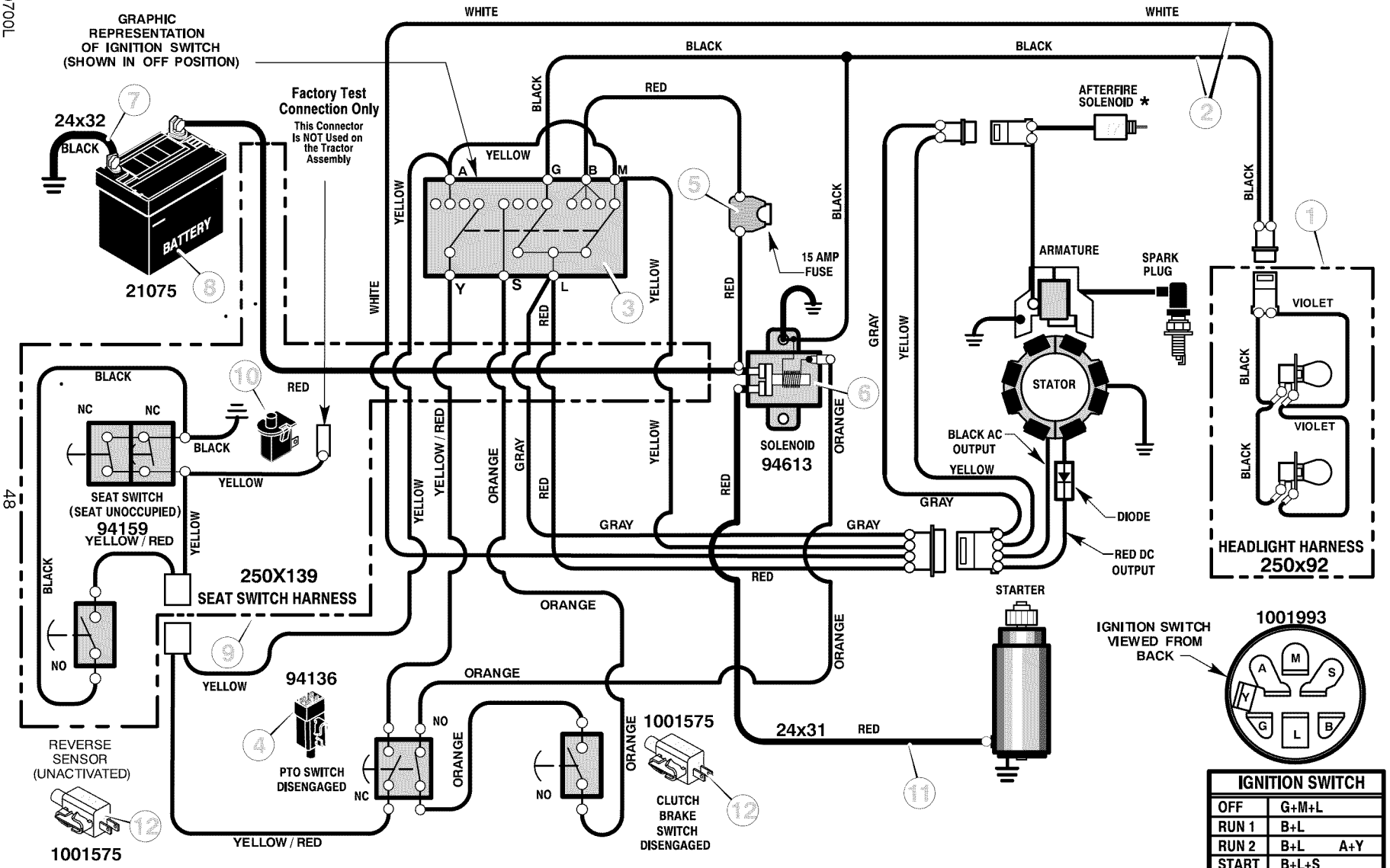

WIRING HARNESS FOR:

GEAR DRIVE TRACTOR

*AFTERFIRE SOLENOID OPTIONAL

MAIN HARNESS: 250x138

SEAT : 250X139; LIGHT : 250X92

Key No.	Part No.	Description
1	250x92	Harness, Light Wire
	1001716	Socket, Light
	090084	Bulb, Light
2	250x138	Harness, Chassis Wire
3	1001993	Switch, Ignition
	020729	Key, Ignition
	091489	Nut, Hex
	091488	Cap, Ignition
4	094136	Switch, Limit (PTO)
5	302031	Fuse
	407078	Holder, Fuse
6	094613	Solenoid
	26x229	Screw, Mounting
	15x116	Locknut
7	024x32	Cable, Battery Ground
	26x229	Screw, Ground Cable
8	021075	Battery
	002x82	Bolt, Carriage
	014x79	Wingnut
9	250x139	Harness, Seat Switch Wire
10	094159	Switch, Seat Sensor
11	024x31	Cable
12	1001575	Switch, Select Reverse™ / Clutch Brake

SLOPE GUIDE

SIGHT AND HOLD THIS GUIDE LEVEL WITH A VERTICAL TREE, A CORNER OF A STRUCTURE, A POWER LINE POLE, OR A FENCE.

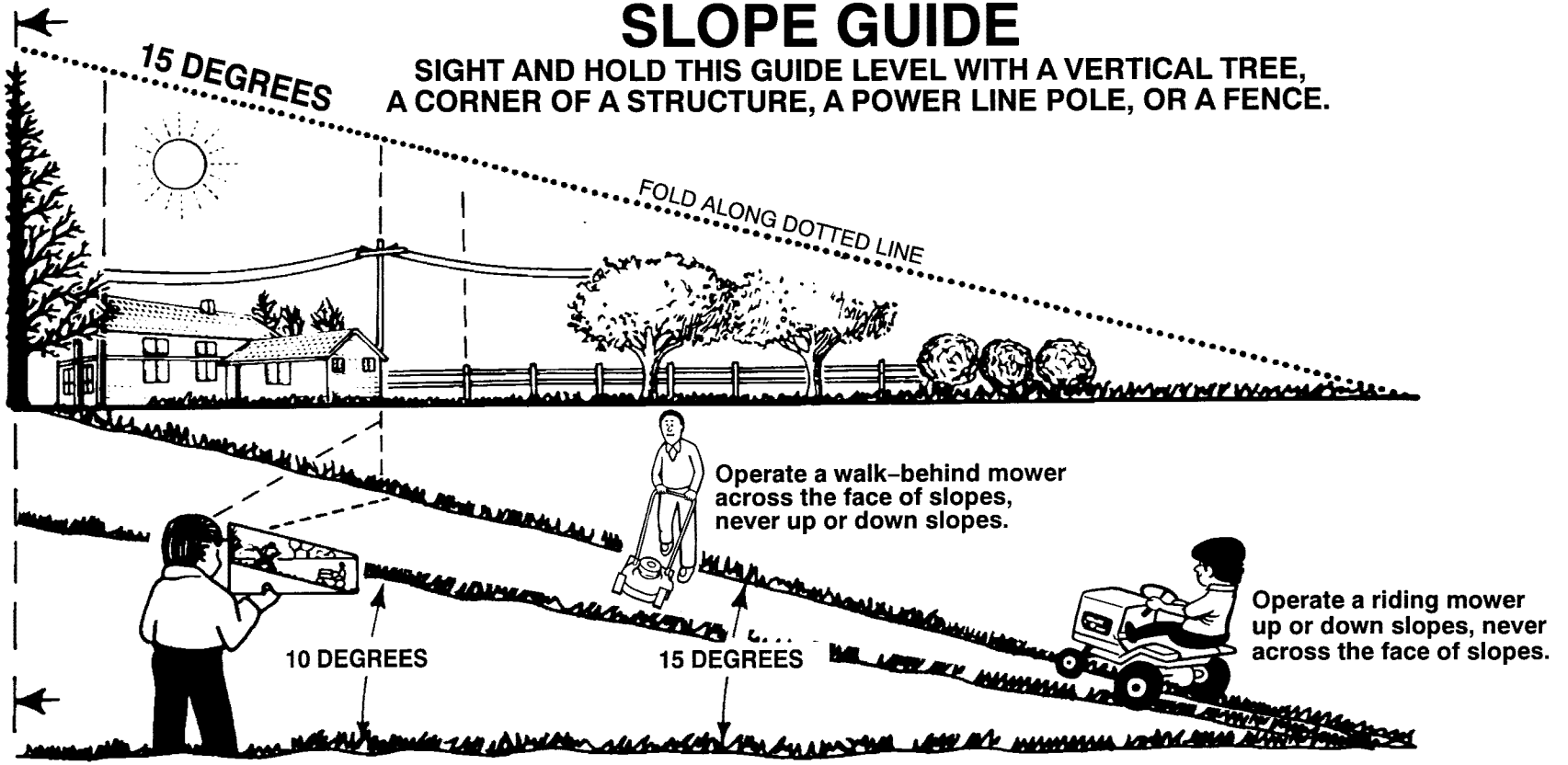

On a riding mower to determine if a slope is safe to mow: (1) disengage the blade(s), (2) put the unit in reverse, and (3) try to back straight up the slope. If you can back up the slope, it is generally safe to mow. However, if you do not feel safe, or if you are not completely sure, use this guide and do not mow a slope that is greater than 15 degrees. If the riding mower is used with a pull-behind or rear mounted attachment, do not operate the unit on a slope that is greater than 10 degrees.

A 15 degree slope is a hill that increases in height at approximately 2.5 feet in 10 feet.
A 10 degree slope is a hill that increases in height at approximately 1.7 feet in 10 feet.

Use extreme care at all times, and avoid sudden turns or maneuvers. Follow other instructions in this manual for safety in mowing on slopes. Operate a riding mower up or down slopes, never across the face of slopes. Operate a walk-behind mower across the face of slopes, never up or down slopes. Use extra care when operating on or near slopes and obstructions.

CUT HERE TO USE SLOPE GUIDE

INDEX

A

Adjustments
- Blade Rotation Control, 23
- Clutch, 24
- Drive Brake, 24
- Mower Housing, Level, 28
- Shift Lever, 25

Attachments, 15, 52

B

Battery
- Charge, 25
- Check, 12
- Clean, 25
- Install, 12
- Removal, 25
- Storage, 33

Belt
- Motion Drive
  - Adjust, 24
  - Replace, 29
- Mower Drive
  - Adjust, 23
  - Replace, 31

Blade
- Inspect, 22
- Remove And Install, 22
- Sharpen, 22

Blade Rotation Control
- Adjust, 23
- Location, 14
- Operation, 16

C

Clutch
- Adjust, 24
- Check, 24

Clutch / Brake Pedal, Location, 14

Controls, Location, 14

Cutting Height
- Adjust, 28
- Change, 17

D

Drive Brake
- Adjust, 24
- Check, 24

E

Electrical Safety System, 15

Engine
- Fuel, 13, 19
- Oil, 13, 19
- Preparation, 13
- Spark Arrester, 13, 21
- Starting, 19
- Storage, 33
- Throttle Control, 15

F

Filter, Fuel, 26

Fuel, Type, 19

Fuse, 33

H

Headlight, Replace Light Bulb, 33

Headlight Switch, Location, 14

I

Ignition Key Switch, Operation, 15

Ignition Switch, Location, 14

L

Lift Lever
- Location, 14
- Operation, 17

Lubrication, Mower, 26

M

Maintenance
- Battery
  - Charge, 25
  - Clean, 25
- Belt
  - Motion Drive, 29
  - Mower Drive, 31
- Blade, 22
- Blade Rotation Control, 23
- Clutch, 24
- Drive Brake, 24
- Filter, Fuel, 26
- Fuse, 33
- Headlight, 33
- Install, Wheels, 32
- Lubrication, 26
- Mower Housing
  - Clean, 33
  - Install, 27
  - Level, 28
  - Remove, 27
- Muffler, 21
- Storage, 33

Maintenance Chart, 21

Motion Drive Belt
- Adjust, 24
- Replace, 29

Mower Drive Belt
- Adjust, 23
- Replace, 31

Mower Housing
- Clean, 33
- Cutting Height, 17
- Install, 27
- Level Adjustment, 28
- Operation, 18
- Remove, 27

Muffler, 21
- Spark Arrester, 21

O

Oil
- Check, 19
- Type, 19

Operation
- Attachments, 15
- Blade Rotation Control, 14, 16
- Clutch / Brake Pedal, 14
- Headlight Switch, 14
- Ignition Key Switch, 15
- Ignition Switch, 14
- Lift Lever, 14, 17
- Location Of Controls, 14
- Mower Housing, 18
- Mowing And Bagging, 20
- Operate On Hills, 18
- Parking Brake, 14, 17
- Shift Lever, 14, 16
- Start The Engine, 19
- Stop The Unit, 17
- Throttle Control, 14, 15
- Transport, 17

P

Parking Brake
- Location, 14
- Operation, 17

Parts Bag, 10

S

Safety Rules
- American National Standard Institute, 3–4
- Safe Mowing Guide, 5–7

Seat, Install, 11

Shift Lever
- Adjust, 25
- Location, 14
- Operation, 16

Slope Guide, 50

Spark Arrester, 13, 21

Steering Wheel, 11

Storage, 33

T

Throttle Control
- Location, 14
- Operation, 15

Tire Pressure, 13, 26

Trouble Shooting Chart, 34

W

Warranty, 2

LAWN TRACTOR ACCESSORIES

Make your Lawn Tractor do more than you ever imagined.

The accessories shown on this page can be used on your Lawn Tractor. See the Store or Dealer where you purchased your Lawn Tractor. If you are unable to obtain the necessary information, contact the Central Parts Distribution Center for your area as listed in your Repair Parts Book.

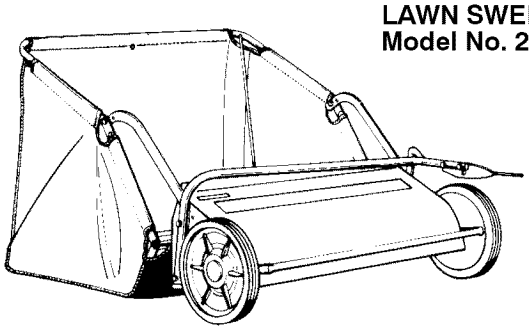

LAWN SWEEPER
Model No. 24720

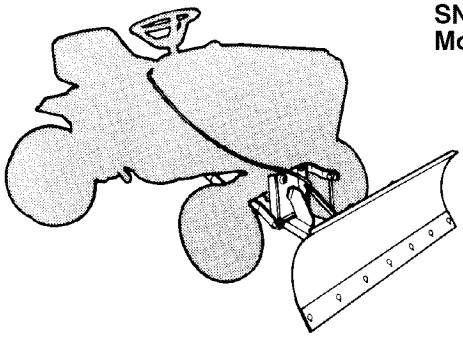

SNOW BLADE
Model No. 24478

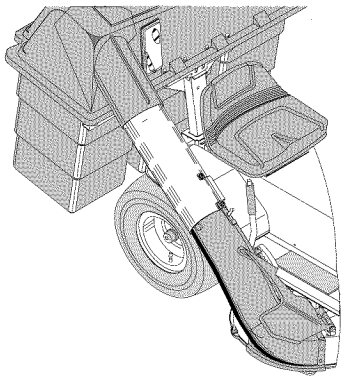

GRASS BAGGER
Model No. 24767
9 Bushel Capacity
(For 42" and 46")

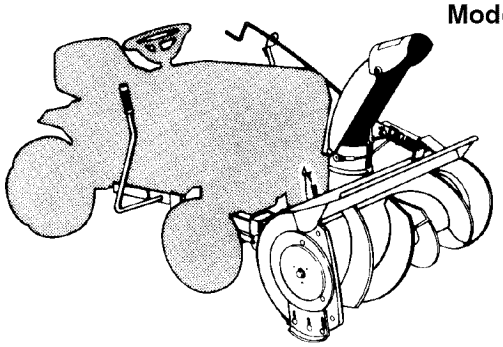

SNOW THROWER
Model No. 24583

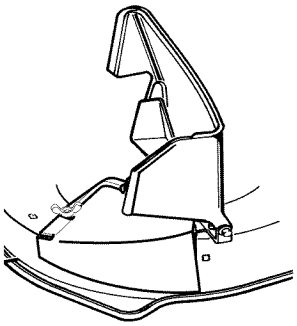

38" MULCHER KIT
Model No. 24750

40" MULCHER KIT
Model No. 24755

42" MULCHER KIT
Model No. 24758

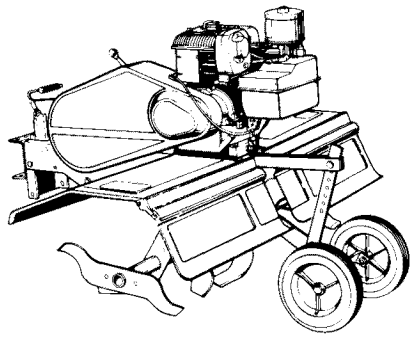

GARDEN TILLER
Model No. 13460

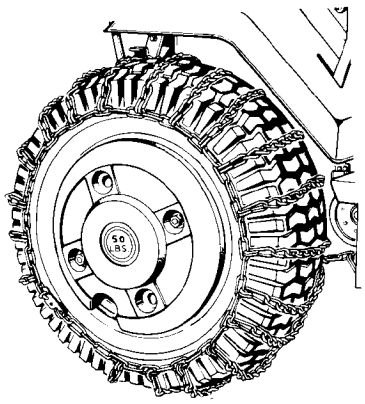

TIRE CHAINS
Model No. 24530
(For 18x8.5 inch tire)
Model No. 24538
(For 18x9.5 inch tires)
Model No. 24525
(For 20x8 inch tire)
Model No. 24515
(For 20x10 inch tire)
Model No. 24539
(For 23x9.5 inch tire)

REAR WHEEL WEIGHTS
Model No. 24003
(For 18x9.5 inch tires)
(For 20x8 inch tires)
Model No. 24630
(For 23 inch tires)

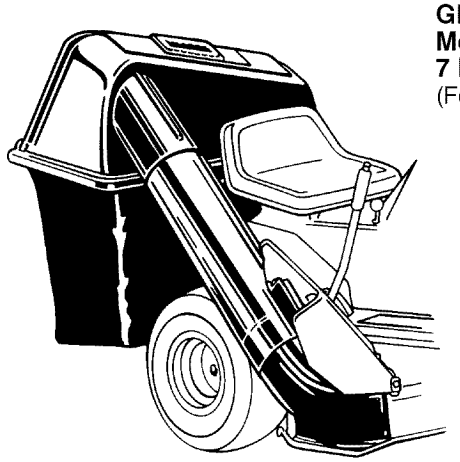

GRASS BAGGER
Model No. 24744
7 Bushel Capacity
(For 38", 40", and 42")

Made in U.S.A.