PRO·FORM® J6si

Model No. 831.297791
Serial No. _____

Find the serial number in the location shown below. Write the serial number in the space above for reference.

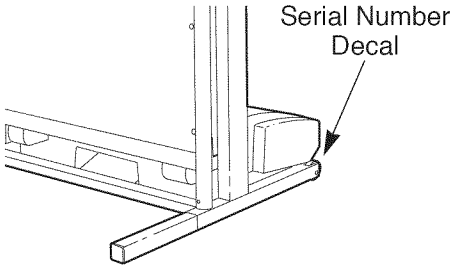

EXERCISE EQUIPMENT

QUESTIONS

HELPLINE!

1-800-736-6879

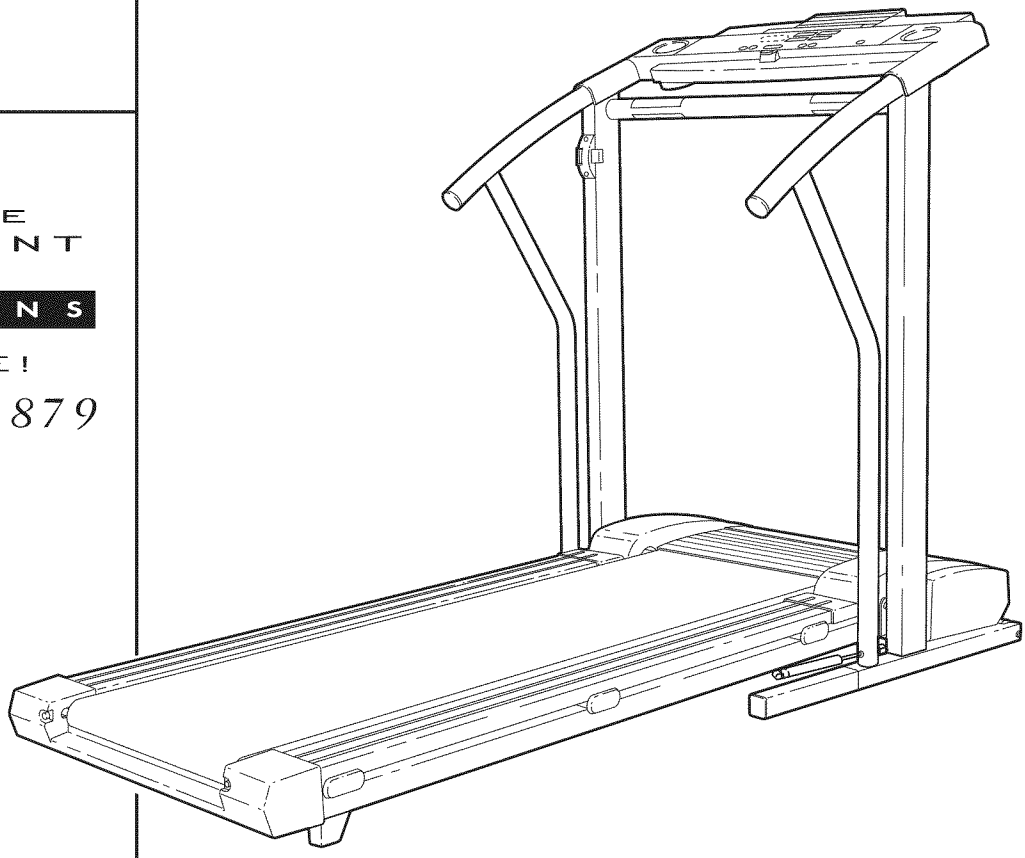

⚠ CAUTION

Read all precautions and instructions in this manual before using this equipment. Save this manual for future reference.

USER'S MANUAL

SEARS, ROEBUCK AND CO., HOFFMAN ESTATES, IL 60179

PRO·FORM® JSi

TABLE OF CONTENTS

IMPORTANT PRECAUTIONS 3
BEFORE YOU BEGIN 5
ASSEMBLY 6
OPERATION AND ADJUSTMENT 9
HOW TO FOLD AND MOVE THE TREADMILL 14
MAINTENANCE AND TROUBLE-SHOOTING 15
CONDITIONING GUIDELINES 17
PART LIST 19
ORDERING REPLACEMENT PARTS . . . . . Back Cover
FULL 90-DAY WARRANTY . . . . . Back Cover

Note: An EXPLODED DRAWING is attached in the center of this manual.

IMPORTANT PRECAUTIONS

⚠ DANGER: To reduce the risk of burns, fire, electric shock, or injury to persons, read the following important precautions and information before operating the treadmill.

1. It is the responsibility of the owner to ensure that all users of this treadmill are adequately informed of all warnings and precautions.
2. Use the treadmill only as described in this manual.
3. Place the treadmill on a level surface, with at least eight feet of clearance behind it. Do not place the treadmill on any surface that blocks air openings. To protect the floor or carpet from damage, place a mat under the treadmill.
4. Keep the treadmill indoors, away from moisture and dust. Do not put the treadmill in a garage or covered patio, or near water.
5. Do not operate the treadmill where aerosol products are used or where oxygen is being administered.
6. Keep children under the age of 12 and pets away from the treadmill at all times.
7. The treadmill should not be used by persons weighing more than 250 pounds.
8. Never allow more than one person on the treadmill at a time.
9. Wear appropriate exercise clothing when using the treadmill. Do not wear loose clothing that could become caught in the treadmill. Athletic support clothes are recommended for both men and women. Always wear athletic shoes. Never use the treadmill with bare feet, wearing only stockings, or in sandals.
10. When connecting the power cord (see page 9), plug the power cord into a surge suppressor (not included) and plug the surge suppressor into a grounded circuit capable of carrying 15 or more amps. No other appliance should be on the same circuit. Do not use an extension cord.
11. Use only a single-outlet surge suppressor that is UL 1449 listed as a transient voltage surge suppressor (TVSS). The surge suppressor must have a UL suppressed voltage rating of 400 volts or less and a minimum surge dissipation of 450 joules. The surge suppressor must be electrically rated for 120 volts AC and 15 amps.
12. Keep the power cord and the surge suppressor away from heated surfaces.
13. Never move the walking belt while the power is turned off. Do not operate the treadmill if the power cord or plug is damaged, or if the treadmill is not working properly. (See BEFORE YOU BEGIN on page 5 if the treadmill is not working properly.)
14. Never start the treadmill while you are standing on the walking belt. Always hold the handrails while using the treadmill.
15. The treadmill is capable of high speeds. Adjust the speed in small increments to avoid sudden jumps in speed.
16. The pulse sensor is not a medical device. Various factors, including the user's movement, may affect the accuracy of heart rate readings. The pulse sensor is intended only as an exercise aid in determining heart rate trends in general.
17. Never leave the treadmill unattended while it is running. Always remove the key, unplug the power cord and move the on/off switch to the off position when the treadmill is not in use. (See the drawing on page 5 for the location of the on/off switch.)
18. Do not attempt to raise, lower, or move the treadmill until it is properly assembled. (See ASSEMBLY on page 6, and HOW TO MOVE THE TREADMILL on page 14.) You must be able to safely lift 45 pounds (20 kg) in order to raise, lower, or move the treadmill.
19. Do not change the incline of the treadmill by placing objects under the treadmill.
20. When folding or moving the treadmill, make sure that the storage latch is fully closed.

21. Inspect and tighten all parts of the treadmill regularly.

22. Never drop or insert any object into any opening.

23. **DANGER:** Always unplug the power cord immediately after use, before cleaning the treadmill, and before performing the maintenance and adjustment procedures described in this manual. Never remove the motor hood unless instructed to do so by an authorized service representative. Servicing other than the procedures in this manual should be performed by an authorized service representative only.

24. This treadmill is intended for in-home use only. Do not use this treadmill in any commercial, rental, or institutional setting.

⚠WARNING: Before beginning this or any exercise program, consult your physician. This is especially important for persons over the age of 35 or persons with pre-existing health problems. Read all instructions before using. SEARS assumes no responsibility for personal injury or property damage sustained by or through the use of this product.

SAVE THESE INSTRUCTIONS

The decal shown at the right has been placed on your treadmill. If the decal is missing, or if it is not legible, please call our toll-free HELPLINE to order a free replacement decal (see the back cover of this manual). Apply the decal in the location shown.

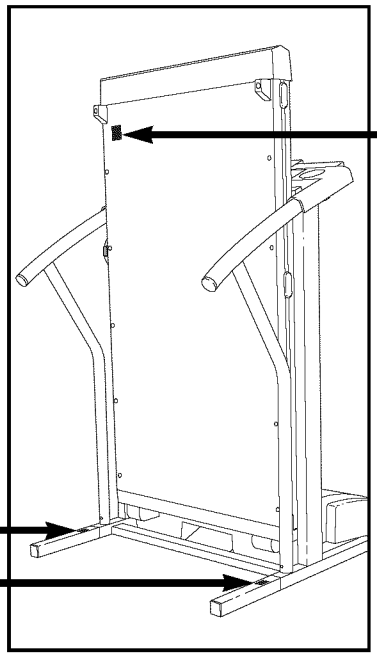

⚠WARNING

- Never allow children on or around treadmill.
- Storage latch must be fully engaged before treadmill is moved or stored.
- Incline must be set at lowest level before folding treadmill into storage position.

⚠CAUTION

KEEP HANDS AND FEET AWAY FROM THIS AREA WHILE THE TREADMILL IS IN OPERATION.

BEFORE YOU BEGIN

Thank you for selecting the new PROFORM® J6si treadmill. The J6si treadmill combines advanced technology with innovative design to let you enjoy an excellent form of cardiovascular exercise in the convenience and privacy of your home. And when you're not exercising, the unique J6si can be folded up, requiring less than half the floor space of other treadmills.

For your benefit, read this manual carefully before using the treadmill. If you have additional questions, please call our toll-free HELPLINE at 1-800-736-6879, Monday through Saturday, 7 a.m. until 7 p.m. Central Time (excluding holidays). To help us assist you, please note the product model number and serial number before calling. The model number of the treadmill is 831.297791. The serial number can be found on a decal attached to the treadmill (see the front cover of this manual for the location).

Before reading further, please review the drawing below and familiarize yourself with the parts that are labeled.

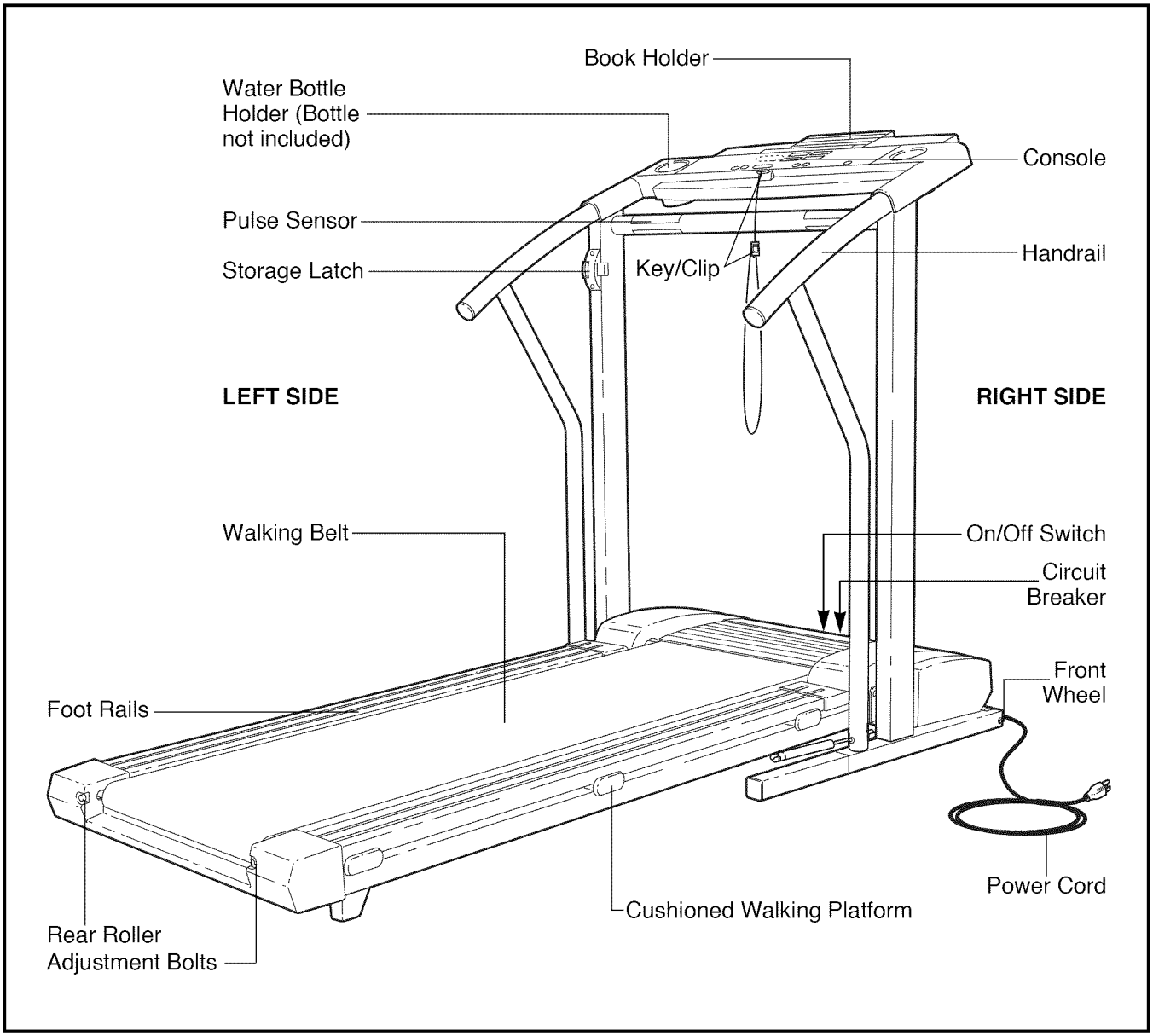

ASSEMBLY

Assembly requires two people. Set the treadmill in a cleared area and remove all packing materials. Do not dispose of the packing materials until assembly is completed. **Assembly requires the included allen wrench and your own phillips screwdriver , adjustable wrench and scissors .**

1. With the help of a second person, carefully raise the treadmill to the upright position. While a second person tips the treadmill to one side slightly and holds it, insert one of the Extension Legs (103) into the treadmill as shown. Make sure that the Extension Leg is turned so the Warning Decal (20) is on top. Tighten two of the four Short Screws (101) into the treadmill and the Extension Leg. Next, tip the treadmill to the other side and attach the other Extension Leg in the same way.

   With the help of a second person, carefully lower the treadmill so that both Extension Legs (103) are resting flat on the floor.

2. Refer to HOW TO LOWER THE TREADMILL FOR USE on page 14. Follow the instructions in step 2 to lower the treadmill.

   Without removing the tape from the Latch (77), attach the Latch to the left Upright (82) with two 3/4" Screws (81). **Make sure that the Screws are tight, but do not overtighten them; if the Screws are overtightened, the Latch will not slide smoothly.** After the Latch is attached, remove any visible tape.

   Note: The inset drawing shows how the parts of the Latch (77) fit together.

3. Cut the plastic tie off the bracket on the base of each Upright (82).

   Next, cut the plastic tie off the Left Handrail (74). Position the Left Handrail on the left Upright (82). The bracket on the base of the left Upright should be **inside** of the lower end of the Left Handrail, as shown in the inset drawing.

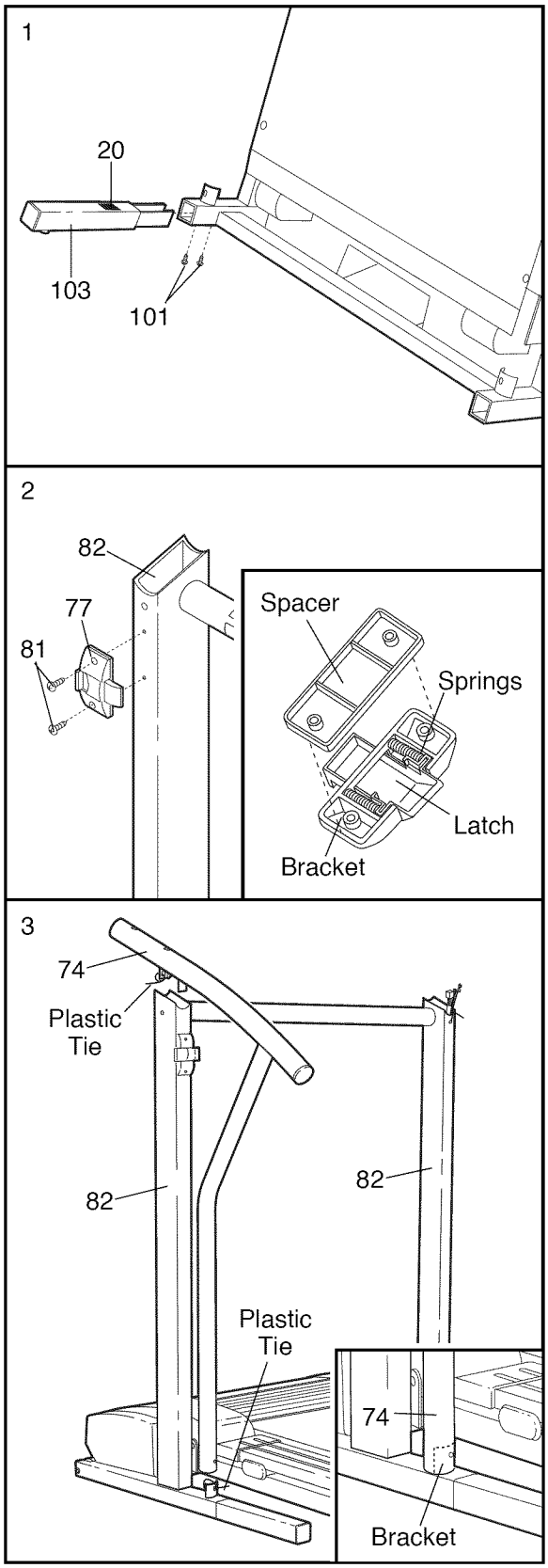

4. While a second person holds the Right Handrail (85) and the Console Base (87) near the right Upright (82), cut the indicated plastic ties off the Right Handrail. **Do not cut the other plastic tie off the Right Handrail.** Next, cut the plastic tie off the Upright Wire Harness (34) in the right Upright (82). **Do not drop the Upright Wire Harness into the right Upright.**

   Refer to the inset drawing. Connect the Upright Wire Harness (34) to the Console Wire Harness (48). The latch on the Console Wire Harness should snap onto the Upright Wire Harness. **If the Wire Harnesses do not fit together easily, turn them; do not force the Wire Harnesses together.**

   Next, connect the right pulse wire, the left pulse wire and the ground wire to the corresponding connectors on the Console Wire Harness (48); **make sure that the wires with tags are connected to each other.**

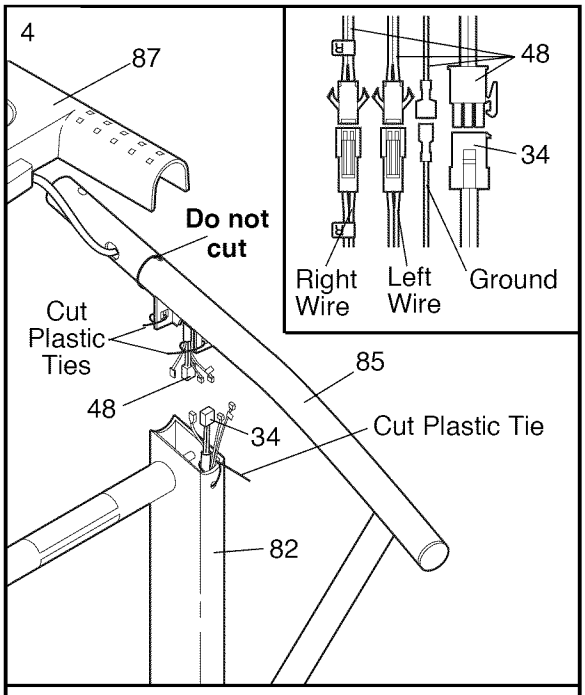

5. **Note that there is still a plastic tie in the Right Handrail (85); do not remove this plastic tie.**

   Set the left side of the Console Base (87) on the Left Handrail (74). **Insert as much of the wires as possible into the Right Handrail (85) and down into the right Upright (82).**

   Next, set the right side of the Console Base (87) on the Right Handrail (85). **Insert all excess Console Wire Harness (48) into the Right Handrail.**

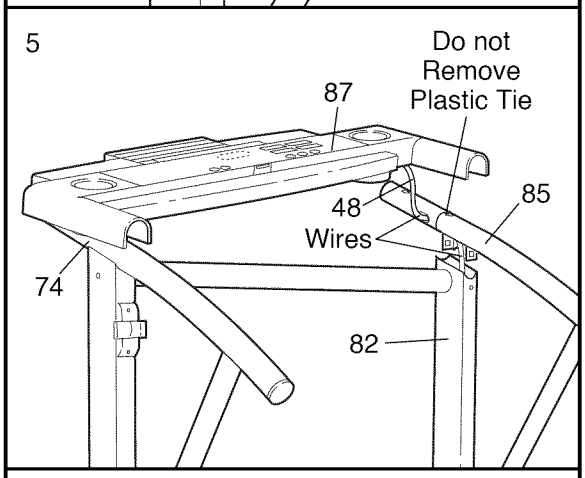

6. Position the Right Handrail (85) on the right Upright (82) as shown; **be careful not to damage the wires.** The bracket on the base of the right Upright should be **inside** of the lower end of the right Handrail, as shown in the inset drawing.

   Thread two Handrail Bolts (78) with Washers (36) into the Left Handrail (74) and the left Upright (82) as shown. **Do not tighten the Handrail Bolts yet.** Next, thread two Handrail Bolts (78) with Washers (36) into the Right Handrail (85) and the right Upright (82). **Do not tighten the Handrail Bolts yet. Be careful to avoid damaging the wires.**

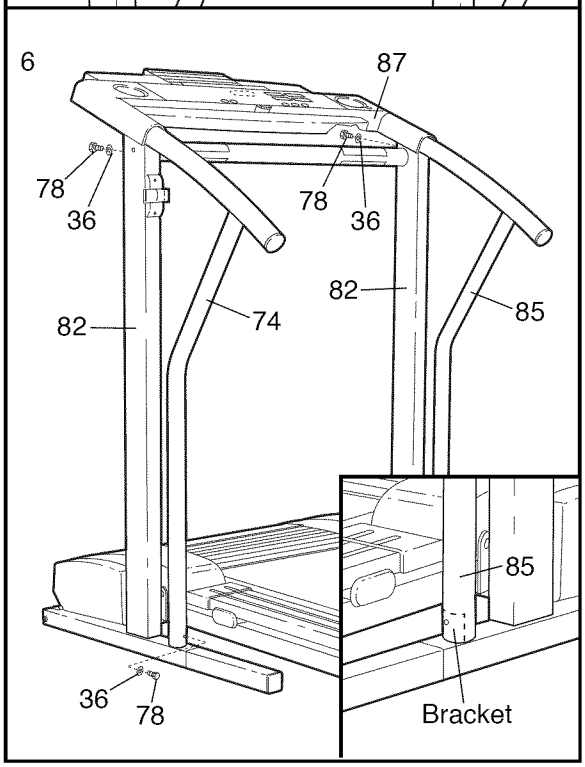

7. Attach the Console Base (87) to the Left and Right Handrails (74, 85) with four Long Screws (114).

   Refer to assembly step 5. Tighten the four Handrail Bolts (78) used in assembly step 5.

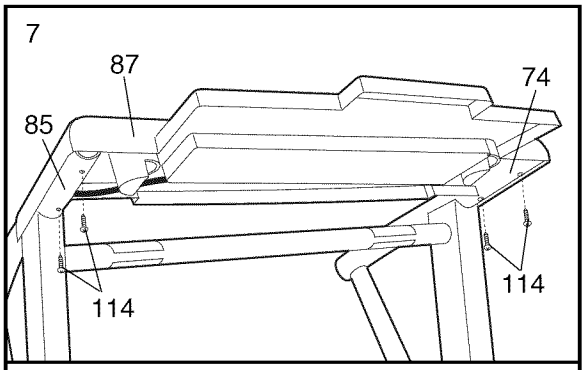

8. Press two Small Upright Plugs (79) into the holes near the upper ends of the Uprights (82).

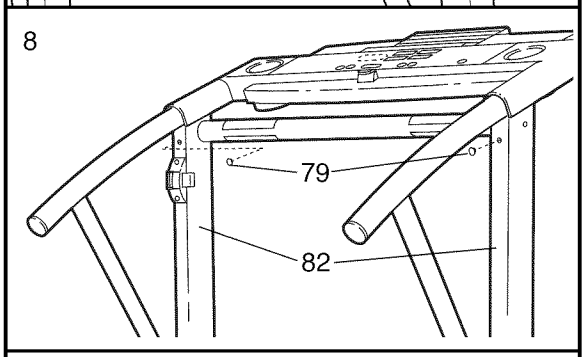

9. Remove the backing from the Adhesive Clip (99). Press the Adhesive Clip onto the base of the right Upright (82) as shown. Press the Allen Wrench (100) into the Adhesive Clip.

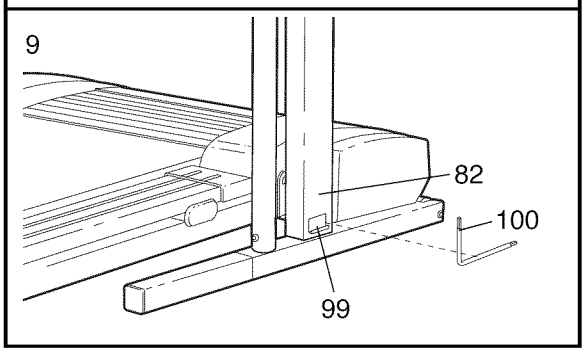

10. **Make sure that all parts are tightened before you use the treadmill.** To protect the floor or carpet, place a mat under the treadmill.

OPERATION AND ADJUSTMENT

THE PERFORMANT LUBE™ WALKING BELT

Your treadmill features a walking belt coated with PERFORMANT LUBE™, a high-performance lubricant. **IMPORTANT: Never apply silicone spray or other substances to the walking belt or the walking platform. Such substances will deteriorate the walking belt and cause excessive wear.**

HOW TO PLUG IN THE POWER CORD

⚠ DANGER: Improper connection of the equipment-grounding conductor can result in an increased risk of electric shock. Check with a qualified electrician or serviceman if you are in doubt as to whether the product is properly grounded. Do not modify the plug provided with the product—if it will not fit the outlet, have a proper outlet installed by a qualified electrician.

Your treadmill, like any other type of sophisticated electronic equipment, can be seriously damaged by sudden voltage changes in your home's power. Voltage surges, spikes, and noise interference can result from weather conditions or from other appliances being turned on or off. **To decrease the possibility of your treadmill being damaged, always use a surge suppressor with your treadmill (see drawing 1 at the right).**

Surge suppressors are sold at most hardware stores and department stores. Use only a single-outlet surge suppressor that is UL 1449 listed as a transient voltage surge suppressor (TVSS). The surge suppressor must have a UL suppressed voltage rating of 400 volts or less and a minimum surge dissipation of 450 joules. The surge suppressor must be electrically rated for 120 volts AC and 15 amps.

This product must be grounded. If it should malfunction or break down, grounding provides a path of least resistance for electric current to reduce the risk of electric shock. This product is equipped with a cord having an equipment-grounding conductor and a grounding plug. **Plug the power cord into a surge suppressor, and plug the surge suppressor into an appropriate outlet that is properly installed and grounded in accordance with all local codes and ordinances.**

This product is for use on a nominal 120-volt circuit, and has a grounding plug that looks like the plug illustrated in drawing 1 below. A temporary adapter that looks like the adapter illustrated in drawing 2 may be used to connect the surge suppressor to a 2-pole receptacle as shown in drawing 2 if a properly grounded outlet is not available.

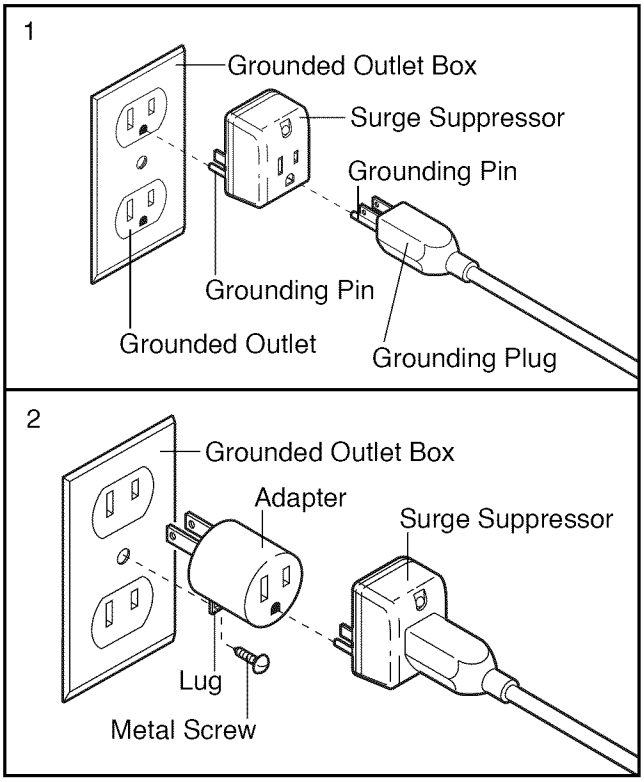

The temporary adapter should be used only until a properly grounded outlet (drawing 1) can be installed by a qualified electrician.

The green-colored rigid ear, lug, or the like extending from the adapter must be connected to a permanent ground such as a properly grounded outlet box cover. Whenever the adapter is used it must be held in place by a metal screw. **Some 2-pole receptacle outlet box covers are not grounded. Contact a qualified electrician to determine if the outlet box cover is grounded before using an adapter.**

CONSOLE DIAGRAM

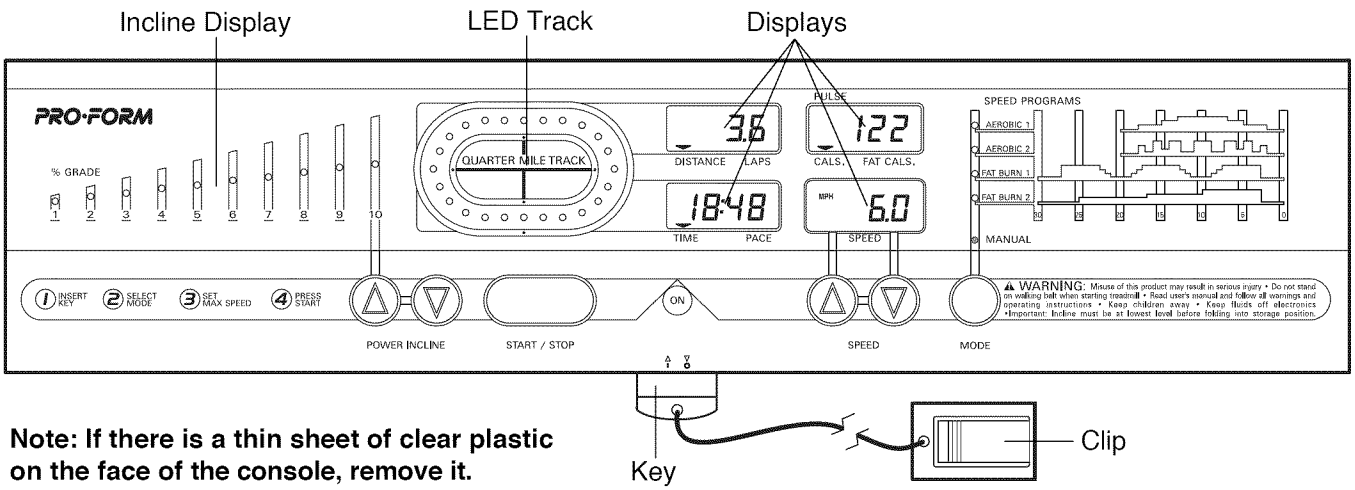

Note: If there is a thin sheet of clear plastic on the face of the console, remove it.

⚠ CAUTION: Before operating the console, read the following precautions.

- **Do not stand on the walking belt when turning on the power.**
- **Always wear the clip (see the drawing above) while operating the treadmill.**
- **Adjust the speed in small increments to avoid sudden jumps in speed.**
- **To reduce the possibility of electric shock, keep the console dry. Avoid spilling liquids on the console, and place only a sealed water bottles in the water bottle holders.**

FEATURES OF THE CONSOLE

The treadmill console offers an impressive array of features designed to help you get the most from each workout. When the manual mode of the console is selected, the speed and incline of the treadmill can be changed with a touch of a button. As you exercise, an LED track and four displays will provide continuous exercise feedback. With the built-in pulse sensor, you can even measure your heart rate. In addition, the console offers four workout programs. Each program will automatically control the speed of the treadmill as it guides you through an effective workout.

STEP-BY-STEP CONSOLE OPERATION

Note: The treadmill console can display speed and distance in either miles or kilometers (see SPEED DISPLAY on page 12). For simplicity, all instructions in this section refer to miles.

Before operating the console, make sure that the on/off switch, located near the power cord, is in the on position.

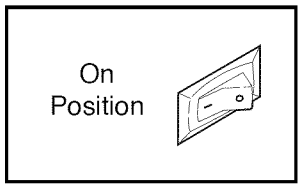

Next, plug in the power cord (see HOW TO PLUG IN THE POWER CORD on page 9). Note: If the key is in the console, remove it before plugging in the power cord.

Step onto the foot rails of the treadmill. Find the clip attached to the key (see the drawing above), and slide the clip onto the waistband of your clothing. Follow the steps below to operate the console.

1 Insert the key into the console.

A moment after the key is inserted, the four displays and various indicators will light.

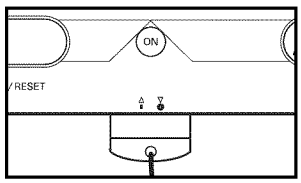

2 Press the MODE button to select the desired mode.

When the key is inserted, the manual mode will be selected, as shown by the MANUAL indicator. The manual mode can also be selected by repeatedly pressing the MODE button.

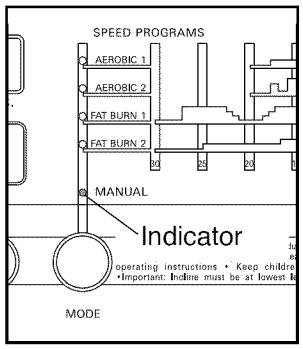

To select one of the four workout programs, press the MODE button repeatedly until the AEROBIC 1, AEROBIC 2, FAT BURN 1 or FAT BURN 2 indicator lights.

Note: The two AEROBIC programs are twenty minutes long; the two FAT BURN programs are thirty minutes long. The graphs on the right side of the console show how the speed of the walking belt will change during the programs. During the AEROBIC 1 program, for example, the speed will gradually increase during the first ten minutes and then gradually decrease during the last ten minutes. Each program begins with a warm-up period and ends with a cool-down period.

3 Set the desired maximum speed setting.

If you selected the manual mode, go to step 4.

If a workout program is selected, a number will flash in the SPEED display. This number is the maximum speed that the walking belt will reach during the selected program. If you want to change the maximum speed setting, press the SPEED △ button. The maximum speed setting can be from 4 mph and 10 mph. If the maximum speed setting is increased, the difficulty level of the entire program will increase. If the maximum speed setting is decreased, the difficulty level of the entire program will decrease.

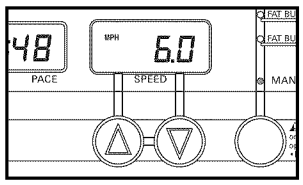

4 Press the START/STOP button to start the walking belt.

A moment after the START/STOP button is pressed, the walking belt will begin to move. Hold the handrails and carefully begin walking.

If the manual mode is selected: As you exercise, change the speed of the walking belt as desired by pressing the SPEED buttons.

To stop the walking belt, press the START/STOP button. The TIME/PACE display will begin to flash. To restart the walking belt, press the START/STOP button again. To stop the walking belt and reset the displays, press the START/STOP button, remove the key from the console and then reinsert the key.

If a preset program is selected: The speed of the walking belt will change automatically during the program as shown by the graphs on the right side of the console. The time remaining in the program will be shown in the TIME/PACE display. When the program is completed, the walking belt will slow to a stop.

If the program is too difficult or too easy, the difficulty level of the program can be adjusted. Press the SPEED △ or ▽ button. A number will begin to flash in the SPEED display. This number is the maximum speed that the walking belt will reach during the program. Press the SPEED △ or ▽ button repeatedly to change the maximum speed setting. If the maximum speed setting is increased, the difficulty level of the entire program will increase. If the maximum speed setting is decreased, the difficulty level of the entire program will decrease.

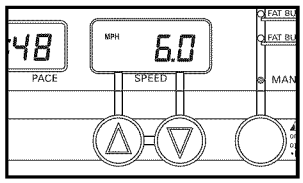

To stop the program for a moment, press the START/STOP button. The TIME/PACE display will begin to flash. To restart the program, press the START/STOP button again. To stop the program and reset the displays, press the START/STOP button, remove the key from the console and then reinsert the key. Note: Pressing the MODE button will also stop the program, reset the displays and select a different mode.

5 Change the incline of the treadmill as desired.

To change the incline of the treadmill, press the incline buttons. Each time one of the buttons is pressed, the incline will change by 0.5%. The buttons can be held down to change the incline rapidly.

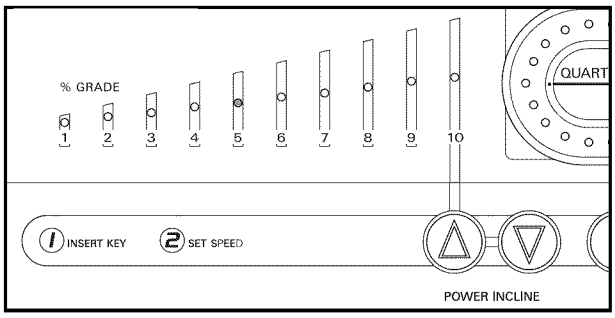

Note: In the incline display, the first indicator will light when the incline is set at 1.5%. The second indicator will light when the incline is set at 2% or 2.5%, the third indicator will light when the incline is set at 3% or 3.5%, and so forth. After the incline buttons are pressed, it will take a moment for the treadmill to reach the selected incline setting.

6 Follow your progress with the LED track and the four displays.

The LED Track—The LED track represents a distance of 1/4 mile. As you exercise, the indicators around the track will light one at a time until you have completed 1/4 mile. A new lap will then begin.

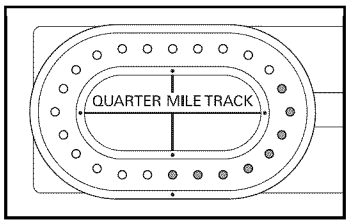

DISTANCE/LAPS display—This display shows the distance that you have walked or run and the number of laps you have completed (one lap equals 1/4 mile). The display will alternate between one number and the other every seven seconds, as shown by the arrows in the display.

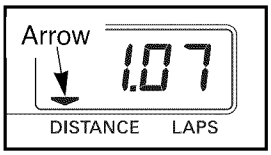

TIME/PACE display—This display shows the elapsed time and your current pace (pace is measured in minutes per mile). The display will alternate between one number and the other every seven seconds, as shown by the arrows in the display.

SPEED display—This display shows the speed of the walking belt, in miles per hour or kilometers per hour. The letters "MPH" or "KPH" will appear to show which unit of measurement is selected.

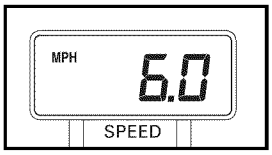

To change the unit of measurement, hold down the START/STOP button while inserting the key into the console. An "E," for english miles, or an "M," for metric kilometers, will appear in the DISTANCE/LAPS display. Press the SPEED △ button to change the unit of measurement. Remove and then reinsert the key.

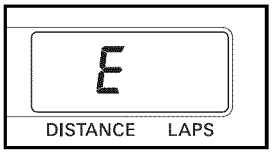

CALS/FAT CALS/ PULSE display—This display shows the approximate numbers of calories and fat calories you have burned (see FAT BURNING on page 17). Every seven seconds, the display will change from one number to the other, as shown by the arrows in the display. This display will also show your heart rate when the pulse sensor is used (see step 7).

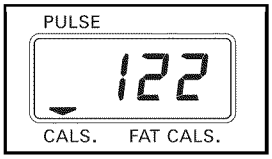

7 Measure your heart rate, if desired.

Stand on the foot rails and place your hands on the metal contacts on the handrail. Your palms must be resting on the upper contacts, and your fingers must be touching the lower contacts—avoid moving your hands while measuring your heart rate. After a moment, the heart-shaped indicator in the CALS/FAT CALS/ PULSE display will flash **steadily** and a "P" will appear in the display. After a few seconds, three dashes (– – –) will appear in the display and your heart rate will be shown. For the most accurate heart rate reading, continue to hold the contacts for about 15 seconds.

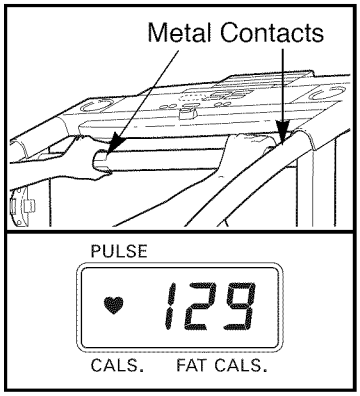

8 When you are finished exercising, remove the key.

Step onto the foot rails and remove the key from the console. Keep the key in a secure place.

In addition, move the on/off switch to the off position and unplug the power cord. (See the drawing on page 10.)

THE INFORMATION MODE

To access the information mode, hold down the START/STOP button while inserting the key into the console.

An "E," for english miles, or an "M," for metric kilometers, will appear in the DISTANCE/LAPS display. If you want to change the unit of measurement, press the SPEED △ button.

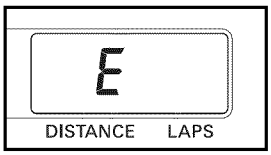

The TIME/PACE display will show the total number of hours the treadmill has been used.

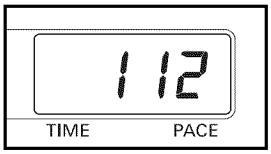

The SPEED display will show the total number of miles that the walking belt has moved.

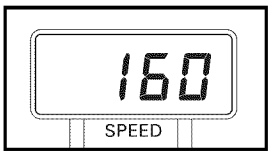

To exit the information mode, remove the key from the console.

PULSE SENSOR TROUBLE-SHOOTING

- **Make sure to stand on the foot rails and avoid moving your hands while measuring your heart rate.** Excessive movement may interfere with heart rate readings. If the pulse sensor is not used correctly, your heart rate will not be shown.
- Do not hold the metal contacts too tightly; doing so may interfere with heart rate readings.
- For the most accurate heart rate reading, wait for about 15 seconds.
- For optimal performance of the pulse sensor, keep the metal contacts clean. The contacts can be cleaned with a soft cloth—never use alcohol, abrasives, or chemicals.

HOW TO FOLD AND MOVE THE TREADMILL

HOW TO FOLD THE TREADMILL FOR STORAGE

Before folding the treadmill, adjust the incline to the lowest position. If this is not done, the treadmill may be permanently damaged. Next, unplug the power cord. CAUTION: You must be able to safely lift 45 pounds (20 kg) in order to raise, lower, or move the treadmill.

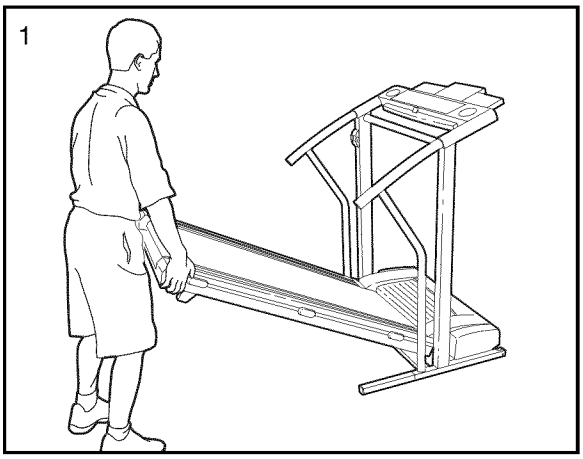

1. Hold the treadmill with your hands in the locations shown at the right. **CAUTION: To decrease the possibility of injury, bend your legs and keep your back straight. As you raise the treadmill, make sure to lift with your legs rather than your back.** Raise the treadmill about halfway to the vertical position.

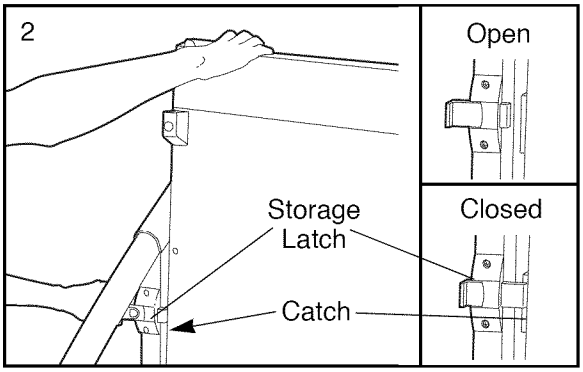

2. Move your right hand to the position shown and hold the treadmill firmly. Using your left thumb, slide the storage latch to the left and hold it. Raise the treadmill until the storage latch closes over the catch. **Make sure that the storage latch is fully closed over the catch.**

   To protect the floor or carpet from damage, place a mat under the treadmill. Keep the treadmill out of direct sunlight. Do not leave the treadmill in the storage position in temperatures above 85° Fahrenheit.

HOW TO MOVE THE TREADMILL

Before moving the treadmill, convert the treadmill to the storage position as described above. **Make sure that the storage latch is closed fully over the catch.**

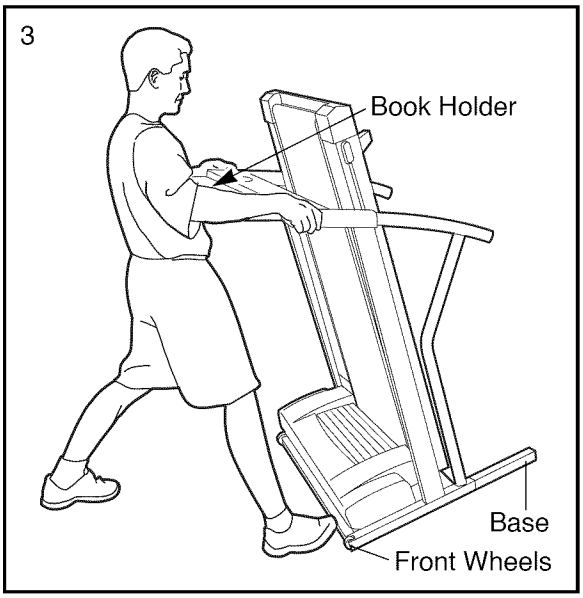

1. Hold the handrails as shown and place one foot against a wheel. **Do not hold or push on the book holder or the book holder may be damaged.**

2. Tilt the treadmill back until it rolls freely on the front wheels. Carefully move the treadmill to the desired location. **Never move the treadmill without tipping it back. To reduce the risk of injury, use extreme caution while moving the treadmill. Do not attempt to move the treadmill over an uneven surface.**

3. Place one foot on the base, and carefully lower the treadmill until it is resting in the storage position.

HOW TO LOWER THE TREADMILL FOR USE

1. Refer to drawing 2 above. Hold the upper end of the treadmill with your right hand as shown. Using your left thumb, slide the storage latch to the left and hold it. Pivot the treadmill down until the frame is past the storage latch.

2. Refer to drawing 1 above. Hold the treadmill firmly with both hands, and lower the treadmill to the floor. **CAUTION: To decrease the possibility of injury, bend your legs and keep your back straight.**

MAINTENANCE AND TROUBLE-SHOOTING

Most treadmill problems can be solved by following the simple steps below. Find the symptom that applies, and follow the steps listed. If further assistance is needed, call our toll-free HELPLINE at 1-800-736-6879, Monday through Saturday, 7 a.m. until 7 p.m. Central Time (excluding holidays).

1. SYMPTOM: THE POWER DOES NOT TURN ON

a. Make sure that the power cord is plugged into a surge suppressor, and that the surge suppressor is plugged into a properly grounded outlet (see page 9). Use only a single-outlet surge suppressor that is UL 1449 listed as a transient voltage surge suppressor (TVSS). The surge suppressor must have a UL suppressed voltage rating of 400 volts or less and a minimum surge dissipation of 450 joules. The surge suppressor must be electrically rated for 120 volts AC and 15 amps.

b. After the power cord has been plugged in, make sure that the key is inserted into the console as far as it will go. See step 1 on page 10.

c. Check the circuit breaker located on the treadmill near the power cord. If the switch protrudes as shown, the circuit breaker has tripped. To reset the circuit breaker, wait for five minutes and then press the switch back in.

d. Check the on/off switch located on the treadmill near the power cord. The switch must be in the on position.

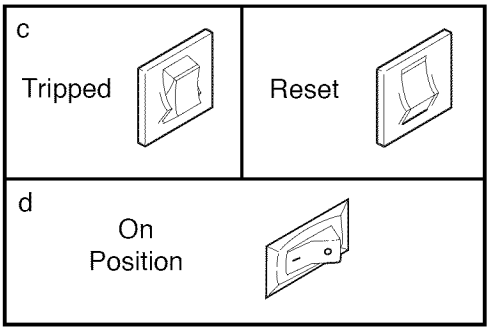

2. SYMPTOM: THE POWER TURNS OFF DURING USE

a. Check the circuit breaker located on the treadmill frame near the power cord (see 1. c. above). If the circuit breaker has tripped, wait for five minutes and then press the switch back in.

b. Make sure that the power cord is plugged in.

c. Remove the key from the console. Reinsert the key fully into the console. See step 1 on page 10.

d. Make sure that the on/off switch is in the on position.

e. If the treadmill still will not run, please call our toll-free HELPLINE.

3. SYMPTOM: THE DISPLAYS OF THE CONSOLE DO NOT FUNCTION PROPERLY

a. Remove the six screws from the hood. Carefully remove the hood. Locate the Reed Switch (21) and the Magnet (43) on the left side of the Pulley (42). Turn the Pulley until the Magnet is aligned with the Reed Switch. **Make sure that the gap between the Magnet and the Reed Switch is about 1/8".** If necessary, loosen the Reed Switch Screw (76) and move the Reed Switch slightly. Retighten the Screw. Re-attach the hood, and run the treadmill for a few minutes to check for a correct speed reading.

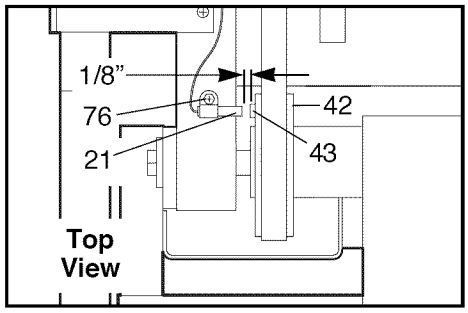

4. SYMPTOM: The walking belt slows when walked on

a. Use only a UL-listed surge protector, rated at 15 amps, with a 14-gauge cord of five feet or less in length.

b. If the walking belt is overtightened, treadmill performance may decrease and the walking belt may be permanently damaged. Remove the key and **UNPLUG THE POWER CORD**. Using the allen wrench, turn both rear roller adjustment bolts counterclockwise, 1/4 of a turn. When the walking belt is properly tightened, you should be able to lift each side of the walking belt 3 to 4 inches off the walking platform. Be careful to keep the walking belt centered. Plug in the power cord, insert the key and run the treadmill for a few minutes. Repeat until the walking belt is properly tightened.

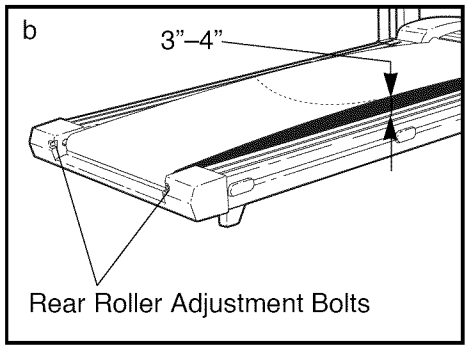

c. If the walking belt still slows when walked on, please call our toll-free HELPLINE.

5. SYMPTOM: The walking belt is off-center

a. If the walking belt has shifted to the left, first remove the key and **UNPLUG THE POWER CORD**. Using the allen wrench, turn the left rear roller adjustment bolt clockwise, and the right bolt counterclockwise, 1/4 of a turn each. Be careful not to overtighten the walking belt. Plug in the power cord, insert the key and run the treadmill for a few minutes. Repeat until the walking belt is centered.

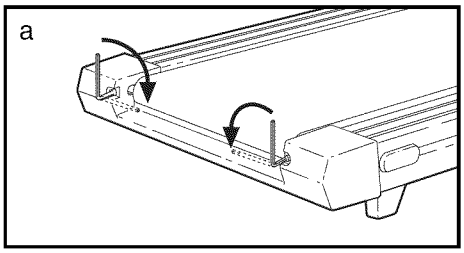

b. If the walking belt has shifted to the right, first remove the key and **UNPLUG THE POWER CORD**. Using the allen wrench, turn the left rear roller adjustment bolt counterclockwise, and the right bolt clockwise, 1/4 of a turn each. Be careful not to overtighten the walking belt. Plug in the power cord, insert the key and run the treadmill for a few minutes. Repeat until the walking belt is centered.

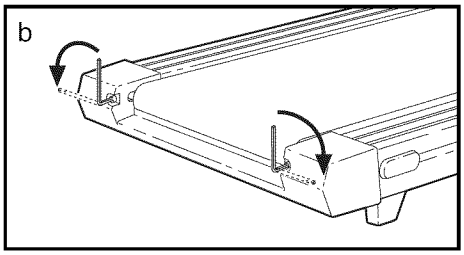

6. SYMPTOM: The walking belt slips when walked on

a. If the walking belt slips when walked on, first remove the key and **UNPLUG THE POWER CORD**. Using the allen wrench, turn both rear roller adjustment bolts clockwise, 1/4 of a turn. When the walking belt is correctly tightened, you should be able to lift each side of the walking belt 3 to 4 inches off the walking platform. Be careful to keep the walking belt centered. Plug in the power cord, insert the key and carefully walk on the treadmill for a few minutes. Repeat until the walking belt is properly tightened.

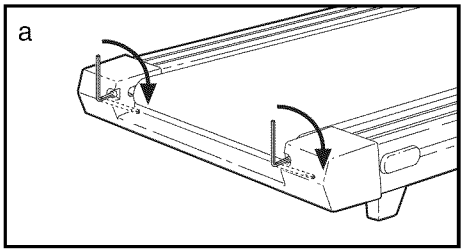

CONDITIONING GUIDELINES

⚠WARNING: Before beginning this or any exercise program, consult your physician. This is especially important for individuals over the age of 35 or individuals with pre-existing health problems.

The pulse sensor is not a medical device. Various factors, including your movement, may affect the accuracy of heart rate readings. The sensor is intended only as an exercise aid in determining heart rate trends in general.

The following guidelines will help you to plan your exercise program. Remember—these are general guidelines only. For more detailed exercise information, obtain a reputable book or consult your physician.

EXERCISE INTENSITY

Whether your goal is to burn fat or to strengthen your cardiovascular system, the key to achieving the desired results is to exercise with the proper intensity. The proper intensity level can be found by using your heart rate as a guide. The chart below shows recommended heart rates for fat burning and aerobic exercise.

HEART RATE TRAINING ZONES

AEROBIC	165	155	145	140	130	125	115
MAX FAT BURN	145	138	130	125	118	110	103
FAT BURN	125	120	115	110	105	95	90
Age	20	30	40	50	60	70	80

To find the proper heart rate for you, first find your age near the bottom of the chart (ages are rounded off to the nearest ten years). Next, find the three numbers above your age. The three numbers define your "training zone." The lower two numbers are recommended heart rates for fat burning; the higher number is the recommended heart rate for aerobic exercise.

To measure your heart rate during exercise, use the pulse sensor on the console. If your heart rate is too high or too low, adjust the speed and incline of the treadmill.

Fat Burning

To burn fat effectively, you must exercise at a relatively low intensity level for a sustained period of time. During the first few minutes of exercise, your body uses easily accessible carbohydrate calories for energy. Only after the first few minutes does your body begin to use stored fat calories for energy. If your goal is to burn fat, adjust the speed and incline of the treadmill until your heart rate is near the lowest number in your training zone. It may also be helpful to use one of the console's FAT BURN programs (see pages 10 to 13).

For maximum fat burning, adjust the speed and incline of the treadmill until your heart rate is near the middle number in your training zone.

Aerobic Exercise

If your goal is to strengthen your cardiovascular system, your exercise must be "aerobic." Aerobic exercise is activity that requires large amounts of oxygen for prolonged periods of time. This increases the demand on the heart to pump blood to the muscles, and on the lungs to oxygenate the blood. For aerobic exercise, adjust the speed and incline of the treadmill until your heart rate is near the highest number in your training zone. It may also be helpful to use one of the console's AEROBIC programs (see pages 10 to 13).

WORKOUT GUIDELINES

Each workout should include the following three parts:

A Warm-up—Start each workout with 5 to 10 minutes of stretching and light exercise. A proper warm-up increases your body temperature, heart rate and circulation in preparation for exercise.

Training Zone Exercise—After warming up, increase the intensity of your exercise until your pulse is in your training zone for 20 to 60 minutes. (During the first few weeks of your exercise program, do not keep your pulse in your training zone for longer than 20 minutes.) Breathe regularly and deeply as you exercise—never hold your breath.

A Cool-down—Finish each workout with 5 to 10 minutes of stretching to cool down. This will increase the flexibility of your muscles and will help prevent post-exercise problems.

Exercise Frequency

To maintain or improve your condition, complete three workouts each week, with at least one day of rest between workouts. After a few months, you may complete up to five workouts each week if desired. The key to success is to make exercise a regular and enjoyable part of your everyday life.

SUGGESTED STRETCHES

The correct form for several basic stretches is shown at the right. Move slowly as you stretch—never bounce.

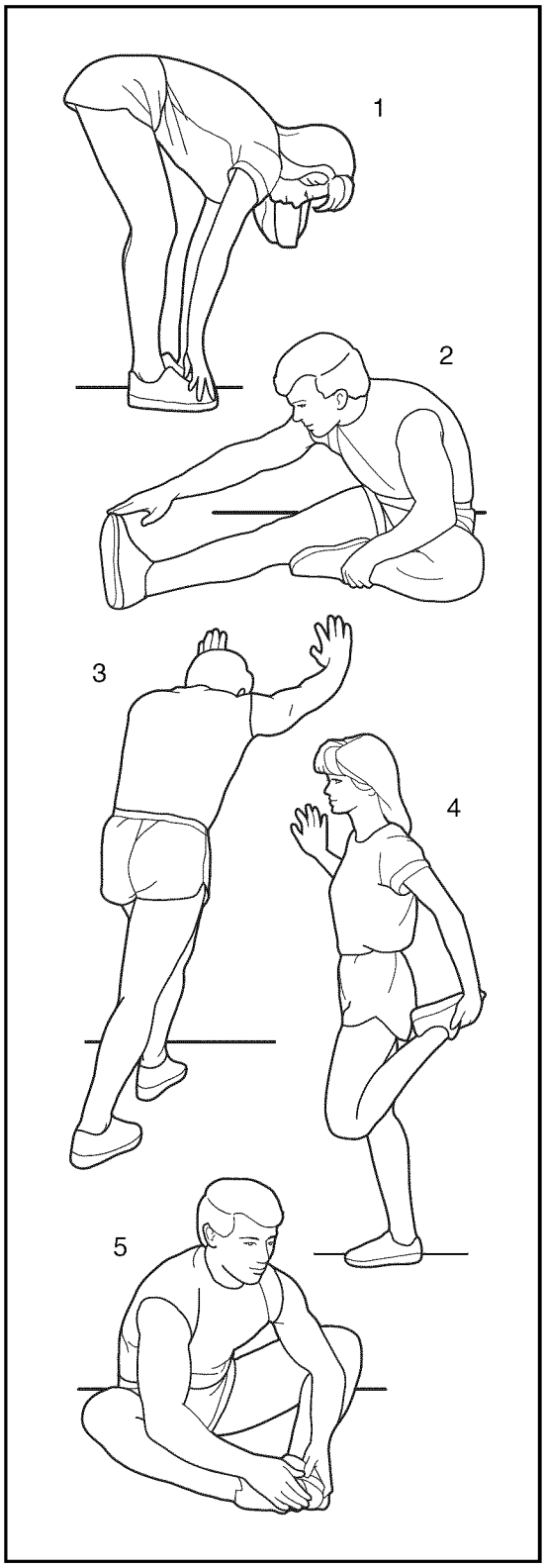

1. Toe Touch Stretch

Stand with your knees bent slightly and slowly bend forward from your hips. Allow your back and shoulders to relax as you reach down toward your toes as far as possible. Hold for 15 counts, then relax. Repeat 3 times. Stretches: Hamstrings, back of knees and back.

2. Hamstring Stretch

Sit with one leg extended. Bring the sole of the opposite foot toward you and rest it against the inner thigh of your extended leg. Reach toward your toes as far as possible. Hold for 15 counts, then relax. Repeat 3 times for each leg. Stretches: Hamstrings, lower back and groin.

3. Calf/Achilles Stretch

With one leg in front of the other, reach forward and place your hands against a wall. Keep your back leg straight and your back foot flat on the floor. Bend your front leg, lean forward and move your hips toward the wall. Hold for 15 counts, then relax. Repeat 3 times for each leg. To cause further stretching of the achilles tendons, bend your back leg as well. Stretches: Calves, achilles tendons and ankles.

4. Quadriceps Stretch

With one hand against a wall for balance, reach back and grasp one foot with your other hand. Bring your heel as close to your buttocks as possible. Hold for 15 counts, then relax. Repeat 3 times for each leg. Stretches: Quadriceps and hip muscles.

5. Inner Thigh Stretch

Sit with the soles of your feet together and your knees outward. Pull your feet toward your groin area as far as possible. Hold for 15 counts, then relax. Repeat 3 times. Stretches: Quadriceps and hip muscles.

PART LIST—Model No. 831.297791

R0199A

Key No.	Qty.	Description
1	1	Motor Belt
2	1	Pulley/Flywheel/Fan
3	4	Motor Nut
4*	1	Motor/Pulley/Fly./Fan
5	3	Incline Motor Bolt
6	1	Incline Motor Spacer
7	1	Incline Motor
8	1	Stop Bracket
9	1	Small Nut
10	2	Star Washer
11	1	Optic Switch
12	1	Frame
13	1	Small Bolt
14	1	Incline Optic Disk
15	8	Incline Motor Nut
16	16	Screw
17	4	Plastic Stand-Off
18	2	Hood Bracket (short)
19	2	Hood Bracket (long)
20	2	Warning Decal
21	1	Reed Switch
22	1	Reed Switch Clip
23	1	Motor/Controller Wire
24	1	Controller
25	1	Electronics Bracket
26	1	Circuit Breaker
27	1	Power Cord
28	1	Power Cord Grommet
29	1	On/Off Switch
30	1	Inlet Bracket
31	1	Incline Leg
32	2	Frame Pivot Bolt
33	2	Frame Pivot Spacer
34	1	Upright Wire Harness
35	1	Front Roller Adj. Bolt
36	7	Washer
37	1	Choke
38	4	Motor Bolt
39	4	Cap Screw
40	1	Left Foot Rail Cap
41	2	Foot Rail
42	1	Front Roller/Pulley
43	1	Magnet
44	6	Platform Screw
45	4	Isolator
46	4	Isolator Screw
47	17	Belly Pan Fastener
48	1	Console Wire Harness
49	2	Belt Guide
50	1	Console Cover
51	1	Front Belly Pan
52	1	Power Supply
53	2	Cable Tie Clamp
54	1	Cable Tie
55	1	Walking Belt
56	2	Roller Guard
57	1	Rear Roller
58	2	Rear Isolator
59	2	Rear Foot
60	11	Rear Foot Screw
61	1	Ground Wire
62	3	Ground Wire Screw
63	1	Belly Pan
64	1	Rear Endcap
65	2	Rear Roller Bolt
66	1	Motor
67	1	Latch Decal
68	2	Rear Platform Screw
69	1	Access Plate
70	1	Latch Catch
71	1	Walking Platform
72	5	8” cable Tie
73	4	4” cable Tie
74	1	Left Handrail
75	2	Handrail Endcap
76	7	Reed Switch Screw
77	1	Storage Latch
78	4	Handrail Bolt
79	2	Small Upright Plug
80	4	Cage Nut
81	4	Motor Star Washer
82	1	Upright
83	2	Incline Pivot Bolt
84	2	Incline Pivot Washer
85	1	Right Handrail
86	2	Wheel Bolt
87	1	Console Base
88	1	Console
89	4	Pulse Sensor Plate
90	1	Key/Clip
91	1	Incline Motor Plate
92	2	Pulse Bar Bolt
93	4	Hood Screw
94	1	Motor Hood
95	2	Front Wheel
96	1	Pulse Bar
97	4	Base Pad
98	8	Console Screw
99	1	Wrench Clip
100	1	Allen Wrench
101	8	Short Screw
102	1	Front Roller Adj. Nut
103	2	Extension Leg
104	2	Extension Leg Cap
105	1	Shock
106	1	Incline Spacer
107	1	Incline Motor Shield
108	1	Book Holder
109	1	Right Foot Rail Cap
110	1	Plastic Shield
111	2	Foot Rail Insert
112	1	Motor Tension Nut
113	1	Motor Tension Bolt
114	4	Long Screw
#	1	8” Blue Wire, 2 F
#	1	4” Blue Wire, 2 F
#	1	10” White Wire, 2 F
#	1	4” White Wire, M/F
#	1	9” Wire Harness
#	1	4” Black Wire, 2 F
#	1	4” Green Wire
#	1	8” Green/Yellow Wire
#	1	User's Manual

* Includes all parts shown in the box
# These parts are not illustrated

EXPLODED DRAWING—Model No. 831.297791

R0199A

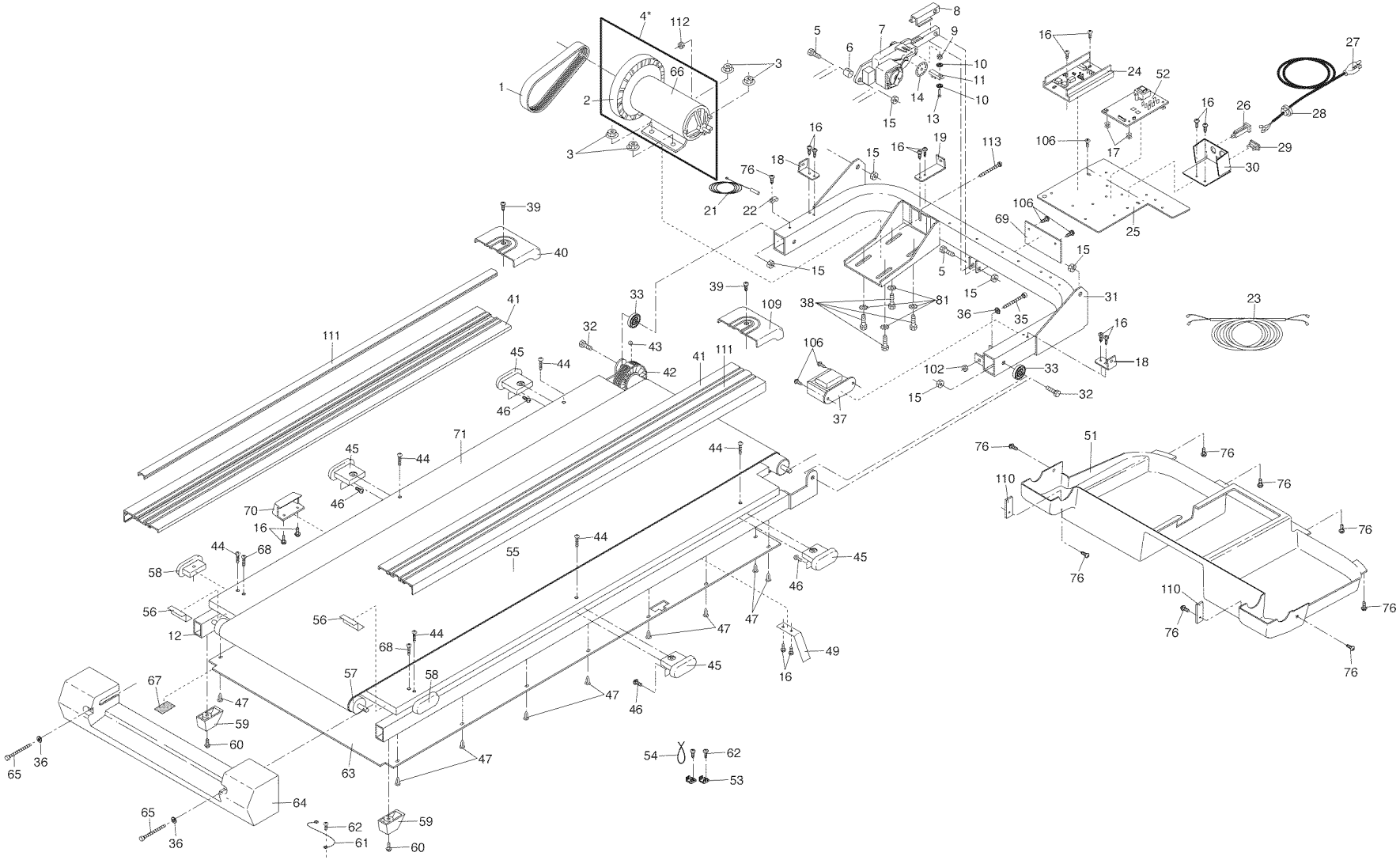

EXPLODED DRAWING—Model No. 831.297791

R0199A

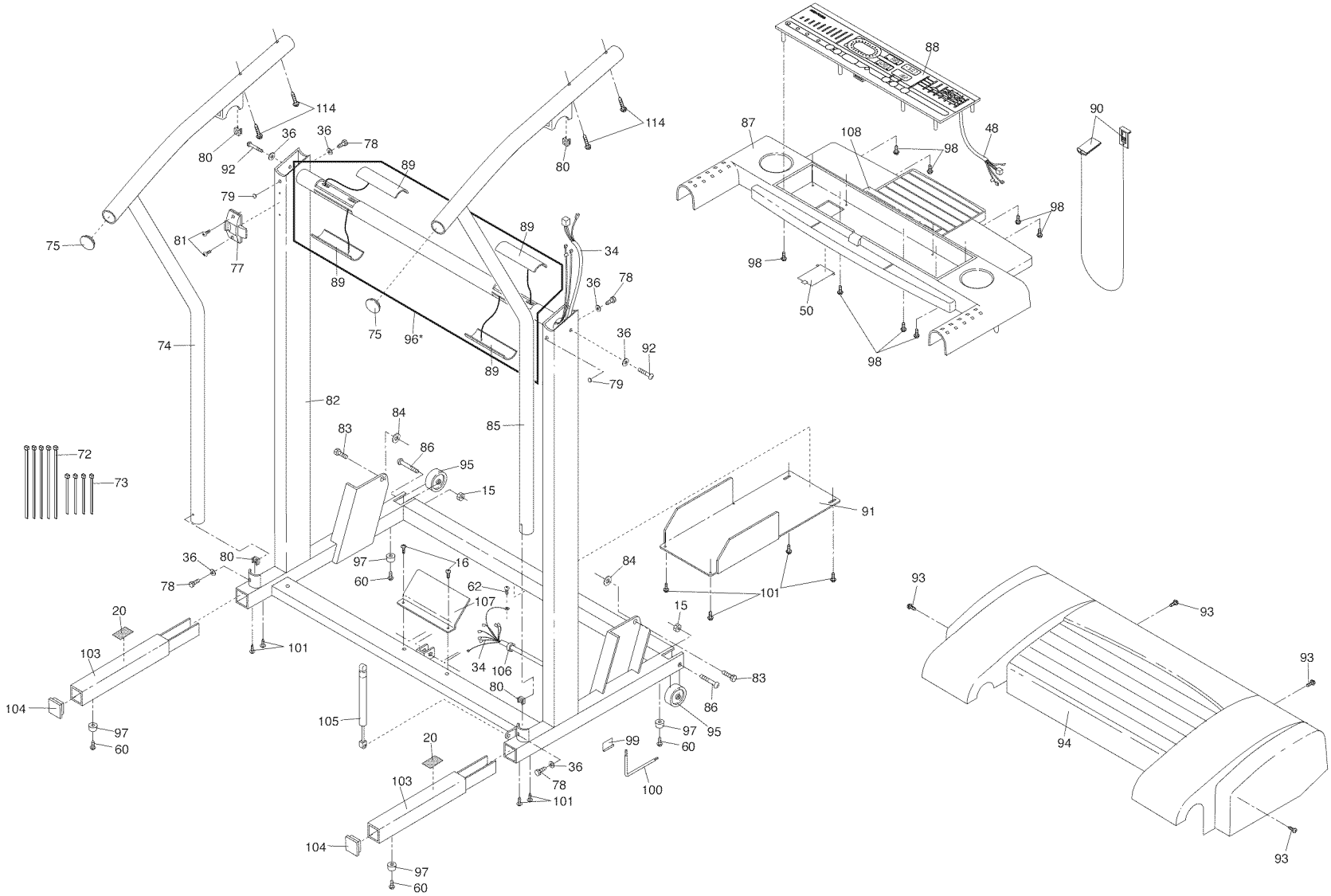

SEARS

Model No. 831.297791

QUESTIONS?

If you find that:

- **you need help assembling or operating the PROFORM J6si treadmill**
- **a part is missing**
- **or you need to schedule repair service**

call our toll-free HELPLINE

1-800-736-6879

Monday–Saturday, 7 am–7 pm Central Time (excluding holidays)

REPLACEMENT PARTS

If parts become worn and need to be replaced, call the following toll-free number

1-800-FON-PART (1-800-366-7278)

The model number and serial number of your PROFORM® J6si treadmill are listed on a decal attached to the frame. See the front cover of this manual to find the location of the decal.

All replacement parts are available for immediate purchase or special order when you visit your nearest SEARS Service Center. To request service or to order parts by telephone, call the toll-free numbers listed at the left.

When requesting help or service, or ordering parts, please be prepared to provide the following information:

- The NAME OF THE PRODUCT (PROFORM® J6si treadmill)
- The MODEL NUMBER OF THE PRODUCT (831.297791)
- The KEY NUMBER AND DESCRIPTION OF THE PART (see the EXPLODED DRAWING and PART LIST included in this manual)

FULL 90 DAY WARRANTY

For 90 days from the date of purchase, if failure occurs due to defect in material or workmanship in this SEARS TREADMILL EXERCISER, contact the nearest SEARS Service Center throughout the United States and SEARS will repair or replace the TREADMILL EXERCISER, free of charge.

This warranty does not apply when the TREADMILL EXERCISER is used commercially or for rental purposes.

This warranty gives you specific legal rights, and you may also have other rights which vary from state to state.

SEARS, ROEBUCK AND CO., DEPT. 817WA, HOFFMAN ESTATES, IL 60179

Part No. 151453 J00031-C R0199A

Printed in USA © 1999 Sears, Roebuck and Co.