PRO-FORM® 415 CROSSWALK

Model No. 831.24723.3
Serial No. _____

Write the serial number in the space above for future reference.

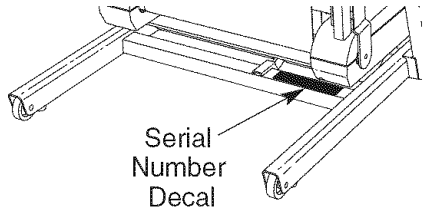

TREADMILL EXERCISER

User's Manual

- Assembly
- Operation
- Maintenance
- Part List and Drawing

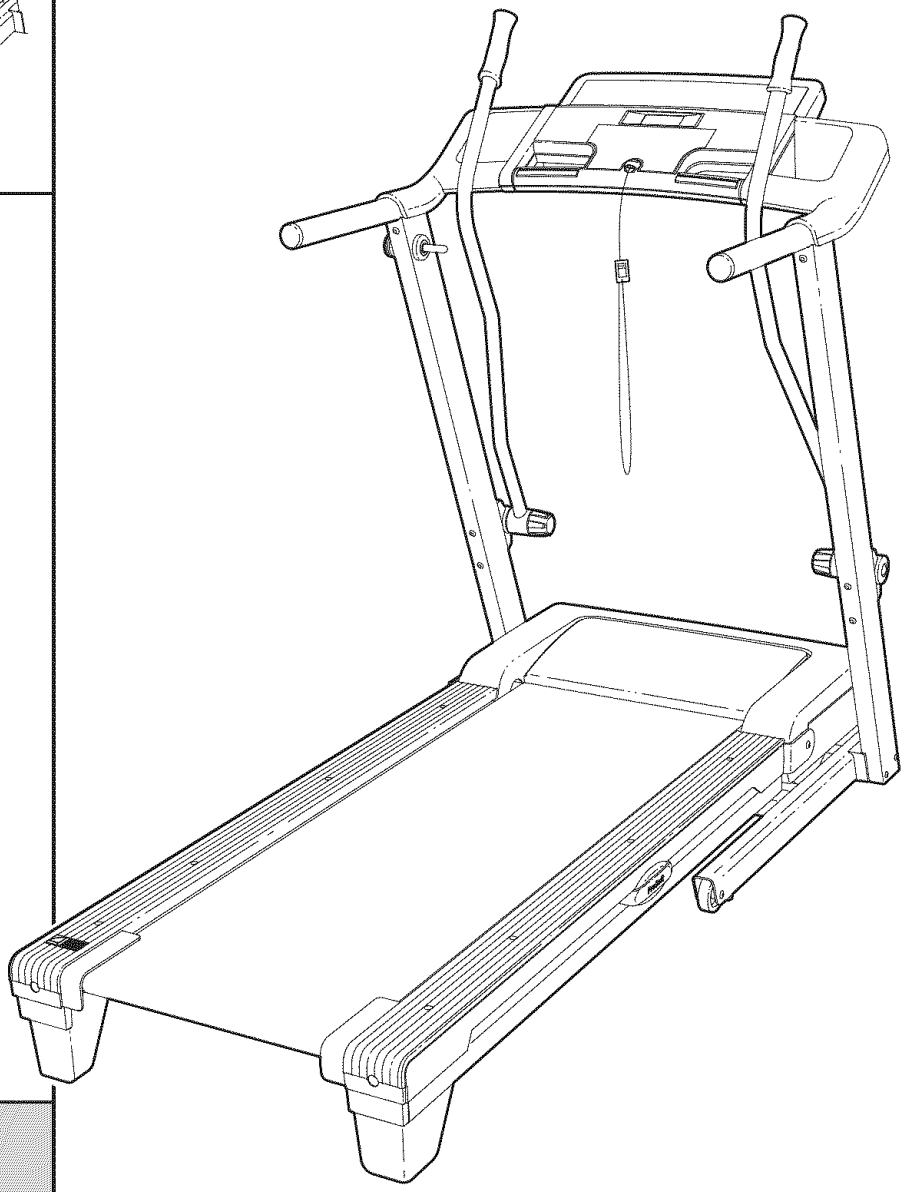

⚠ CAUTION

Read all precautions and instructions in this manual before using this equipment. Save this manual for future reference.

Sears, Roebuck and Co., Hoffman Estates, IL 60179

TABLE OF CONTENTS

WARNING DECAL PLACEMENT 2
IMPORTANT PRECAUTIONS 3
BEFORE YOU BEGIN 5
ASSEMBLY 6
OPERATION AND ADJUSTMENT 11
HOW TO FOLD AND MOVE THE TREADMILL 17
TROUBLESHOOTING 18
EXERCISE GUIDELINES 21
PART LIST 22
EXPLODED DRAWING 24
ORDERING REPLACEMENT PARTS . . . . . Back Cover
90 DAY FULL WARRANTY . . . . . Back Cover

WARNING DECAL PLACEMENT

The decals shown here have been applied in the locations shown. **If a decal is missing or illegible, call 1-888-533-1333 and request a free replacement decal. Apply the decal in the location shown.** Note: The decals may not be shown at actual size.

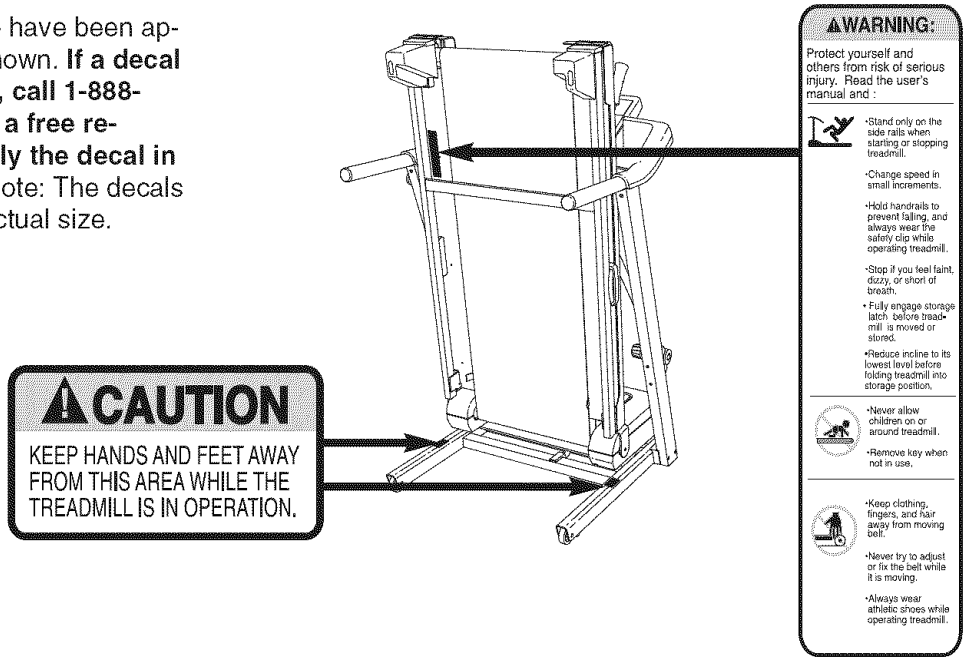

IMPORTANT PRECAUTIONS

⚠ WARNING: To reduce the risk of serious injury, read all important precautions and instructions in this manual and all warnings on your treadmill before using your treadmill. Sears assumes no responsibility for personal injury or property damage sustained by or through the use of this product.

1. Before beginning any exercise program, consult your physician. This is especially important for persons over the age of 35 or persons with pre-existing health problems.
2. It is the responsibility of the owner to ensure that all users of this treadmill are adequately informed of all warnings and precautions.
3. Use the treadmill only as described.
4. Place the treadmill on a level surface, with at least 8 ft. (2.4 m) of clearance behind it and 2 ft. (0.6 m) on each side. Do not place the treadmill on any surface that blocks air openings. To protect the floor or carpet from damage, place a mat under the treadmill.
5. Keep the treadmill indoors, away from moisture and dust. Do not put the treadmill in a garage or covered patio, or near water.
6. Do not operate the treadmill where aerosol products are used or where oxygen is being administered.
7. Keep children under the age of 12 and pets away from the treadmill at all times.
8. The treadmill should be used only by persons weighing 250 lbs. (113 kg) or less.
9. Never allow more than one person on the treadmill at a time.
10. Wear appropriate exercise clothes when using the treadmill. Do not wear loose clothes that could become caught in the treadmill. Athletic support clothes are recommended for both men and women. *Always wear athletic shoes. Never use the treadmill with bare feet, wearing only stockings, or in sandals.*
11. When connecting the power cord (see page 11), plug the power cord into a surge suppressor (not included) and plug the surge suppressor into a grounded circuit capable of carrying 15 or more amps. No other appliance should be on the same circuit. Do not use an extension cord.
12. Use only a single-outlet surge suppressor that meets all of the specifications described on page 11. To purchase a surge suppressor, see your local Sears store or call the telephone number on the back cover of this manual and order part number 146148, or see your local electronics store.
13. Failure to use a properly functioning surge suppressor could result in damage to the control system of the treadmill. If the control system is damaged, the walking belt may change speed, accelerate, or stop unexpectedly, which may result in a fall and serious injury.
14. Keep the power cord and the surge suppressor away from heated surfaces.
15. Never move the walking belt while the power is turned off. Do not operate the treadmill if the power cord or plug is damaged, or if the treadmill is not working properly. (See TROUBLESHOOTING on page 18 if the treadmill is not working properly.)
16. Read, understand, and test the emergency stop procedure before using the treadmill (see HOW TO TURN ON THE POWER on page 13).
17. Never start the treadmill while you are standing on the walking belt. Always hold the handrails or crosswalk arms while using the treadmill.
18. The treadmill is capable of high speeds. Adjust the speed in small increments to avoid sudden jumps in speed.
19. The pulse sensor is not a medical device. Various factors, including the user's movement, may affect the accuracy of heart rate readings. The pulse sensor is intended only as an exercise aid in determining heart rate trends in general.

20. Never leave the treadmill unattended while it is running. Always remove the key, unplug the power cord, and switch the reset/off circuit breaker to the off position when the treadmill is not in use. (See the drawing on page 5 for the location of the circuit breaker.)

21. Do not attempt to raise, lower, or move the treadmill until it is properly assembled. (See ASSEMBLY on page 6, and HOW TO FOLD AND MOVE THE TREADMILL on page 17.) You must be able to safely lift 45 lbs. (20 kg) to raise, lower, or move the treadmill.

22. When folding or moving the treadmill, make sure that the storage latch is fully closed.

23. Never insert any object into any opening on the treadmill.

24. Inspect and properly tighten all parts of the treadmill regularly.

25. **DANGER:** Always unplug the power cord immediately after use, before cleaning the treadmill, and before performing the maintenance and adjustment procedures described in this manual. Never remove the motor hood unless instructed to do so by an authorized service representative. Servicing other than the procedures in this manual should be performed by an authorized service representative only.

26. This treadmill is intended for in-home use only. Do not use this treadmill in a commercial, rental, or institutional setting.

SAVE THESE INSTRUCTIONS

BEFORE YOU BEGIN

Thank you for selecting the revolutionary PROFORM® CROSSWALK 415 treadmill. The CROSSWALK 415 treadmill offers an impressive array of features designed to make your workouts at home more enjoyable and effective. And when you're not exercising, the unique CROSSWALK 415 treadmill can be folded up, requiring less than half the floor space of other treadmills.

For your benefit, read this manual carefully before using the treadmill. If you have questions after reading this manual, please see the front cover of this manual. To help us assist you, note the product model number and serial number before contacting us. The model number and the location of the serial number decal are shown on the front cover of this manual.

Before reading further, please review the drawing below and familiarize yourself with the labeled parts.

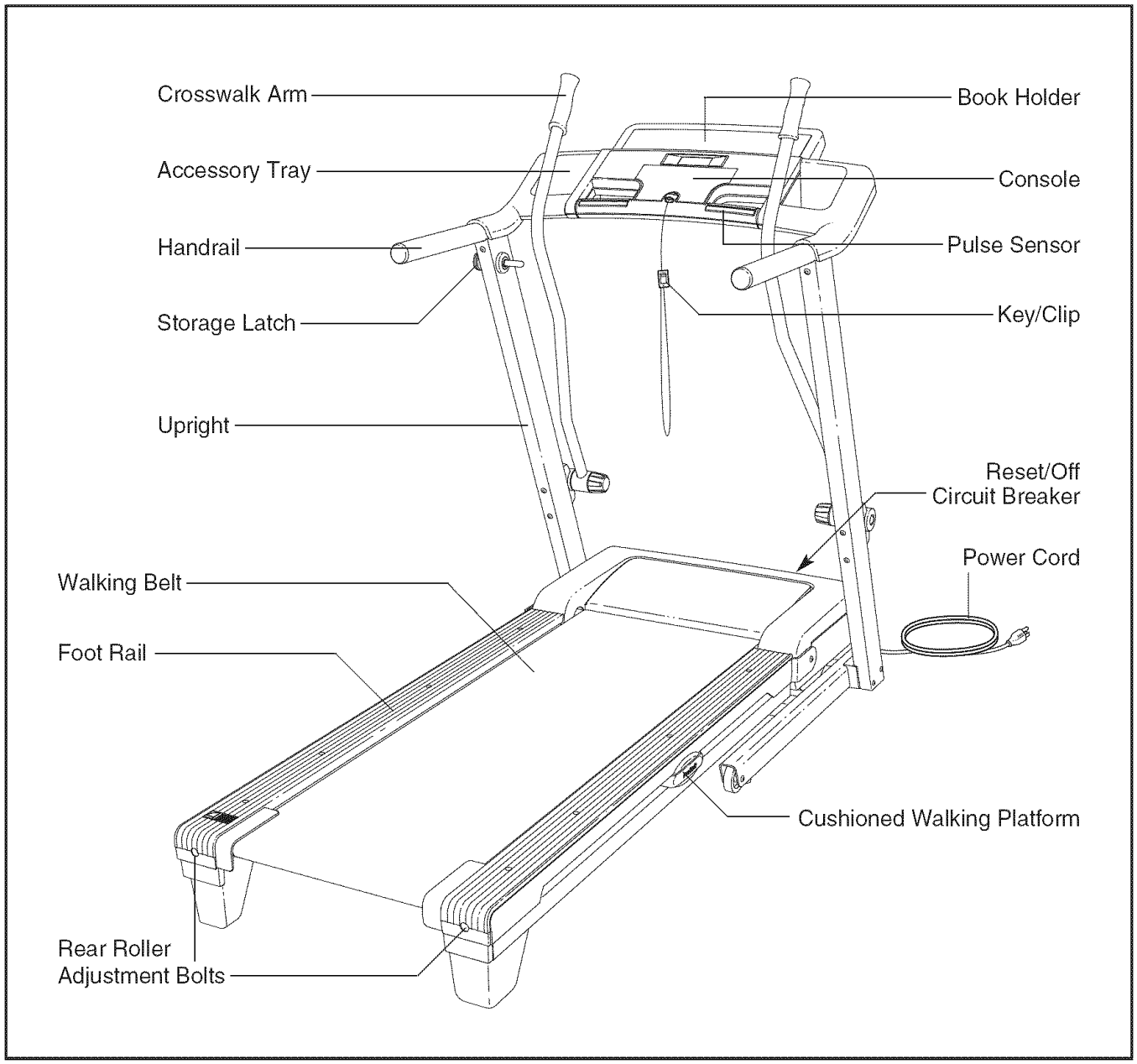

ASSEMBLY

Assembly requires two persons. Set the treadmill in a cleared area and remove all packing materials. Do not dispose of the packing materials until assembly is completed. Note: The underside of the treadmill walking belt is coated with high-performance lubricant. During shipping, a small amount of lubricant may be transferred to the top of the walking belt or the shipping carton. This is a normal condition and does not affect treadmill performance. If there is lubricant on top of the walking belt, simply wipe off the lubricant with a soft cloth and a mild, non-abrasive cleaner.

Assembly requires the included hex keys and your own Phillips screwdriver and adjustable wrench .

Use the drawings below to identify the assembly hardware. The number in parentheses below each drawing is the key number of the part, from the PART LIST near the end of this manual. The number after the parentheses is the quantity needed for assembly. **Note: If a part is not in the parts bag, check to see if it is preattached to one of the parts to be assembled. Extra hardware may be included. If a part is missing, call 1-888-533-1333. To avoid damaging plastic parts, do not use power tools for assembly.**

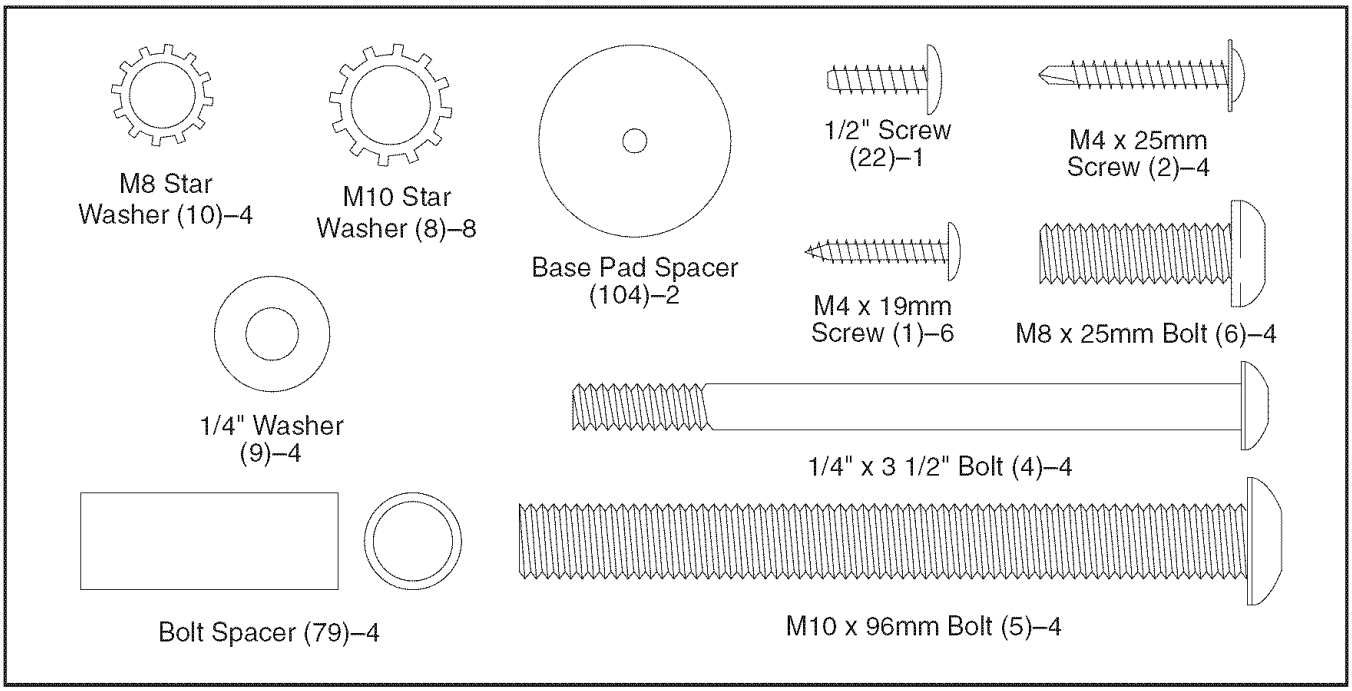

1. **Make sure that the power cord is unplugged.** With the help of a second person, carefully tip the treadmill onto its left side. Partially fold the Frame (48) so that the treadmill is more stable; **do not fully fold the Frame yet.**

   Remove and discard the two indicated bolts (A) and the shipping bracket (B).

   Cut the tie securing the Upright Wire (77) to the Base (85). Locate the tie in the indicated hole in the Base, and use the tie to pull the Upright Wire out of the hole.

   Attach a Base Pad (81) to the Base (85) in the location shown with a Base Pad Spacer (104) and an M4 x 25mm Screw (2). Then, attach another Base Pad (81) with only a Screw (2).

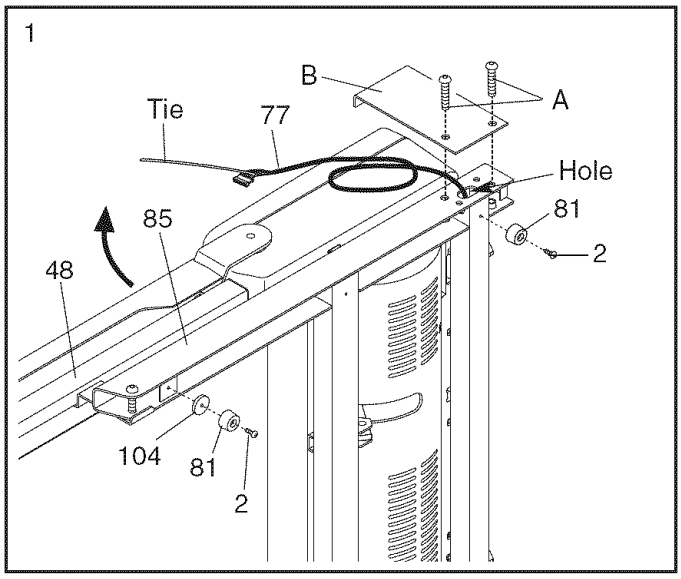

2. Remove the M10 Nut (33), the M10 x 50mm Bolt (27), and the shipping bracket (C) from the Base (85). Attach a Wheel (86) with the Bolt and the Nut that you just removed. **Do not overtighten the Nut; the Wheel must turn freely.** Discard the shipping bracket.

   Cut the tie off the Upright Wire (77).

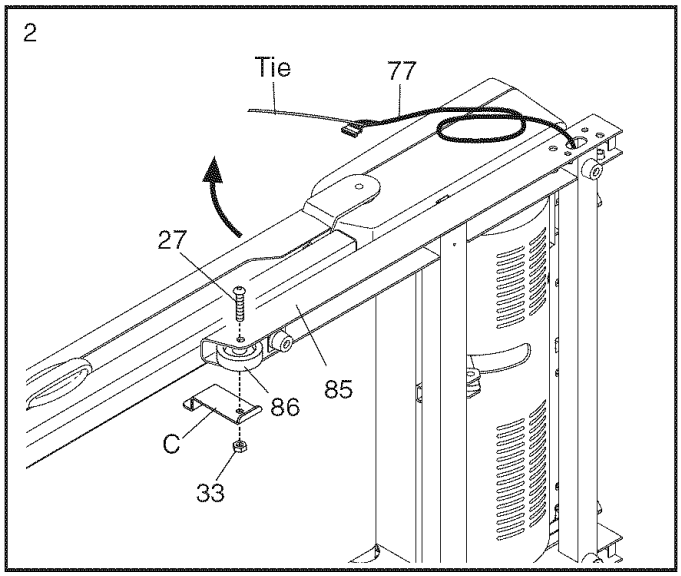

3. Identify the Right Upright (78) and the Right Upright Spacer (80), which are marked with stickers. Insert the Upright Wire (77) through the Right Upright Spacer as shown.

   See the inset drawing. Tie the wire tie in the Right Upright (78) securely around the end of the Upright Wire (77). With the help of a second person, hold the Right Upright near the Base (85). Then, pull the other end of the wire tie until the Upright Wire is routed completely through the Right Upright.

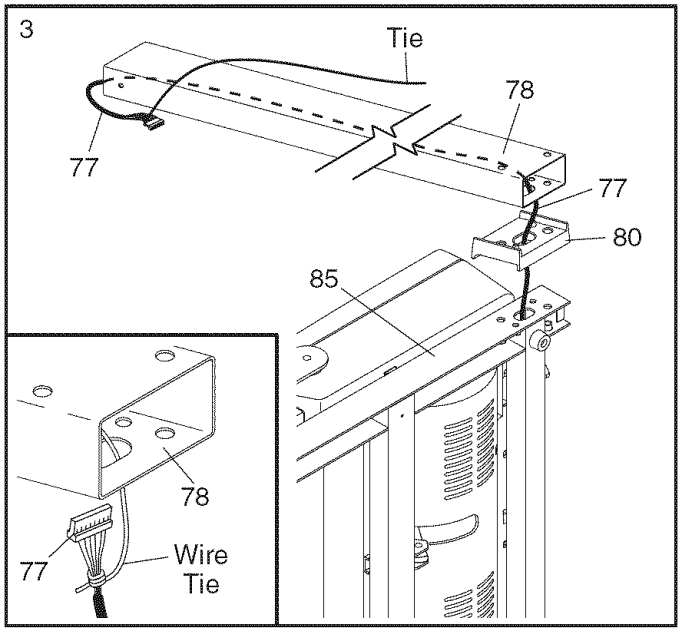

4. Hold a Bolt Spacer (79) inside the lower end of the Right Upright (78). Insert a M10 x 96mm Bolt (5) with a M10 Star Washer (8) into the Right Upright and the Bolt Spacer. **Repeat this step with a second Bolt Spacer (79), Bolt (5), and Star Washer (8).**

   Hold the Right Upright Spacer (80) and the Right Upright (78) against the Base (85). **Be careful not to pinch the Upright Wire (77).** Finger tighten the M10 x 96mm Bolts (5); **do not fully tighten the Bolts yet.**

   Press a Base Endcap (82) into the Base (85).

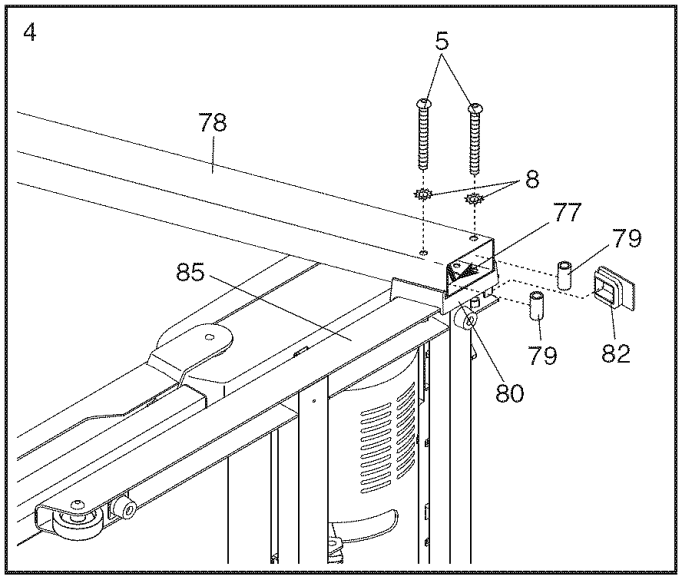

5. With the help of a second person, carefully tip the treadmill onto its right side. Partially fold the Frame (48) so the treadmill is more stable; **do not fully fold the Frame yet.**

   Remove and discard the two indicated bolts (A) and the shipping bracket (B).

   Attach a Base Pad (81) to the Base (85) in the location shown with a Base Pad Spacer (104) and an M4 x 25mm Screw (2). Then, attach another Base Pad (81) with only a Screw (2).

   Remove the M10 Nut (33), the M10 x 50mm Bolt (27), and the shipping bracket (C) from the Base (85). Attach a Wheel (86) with the Bolt and the Nut that you just removed. **Do not overtighten the Nut; the Wheel must turn freely.** Discard the shipping bracket.

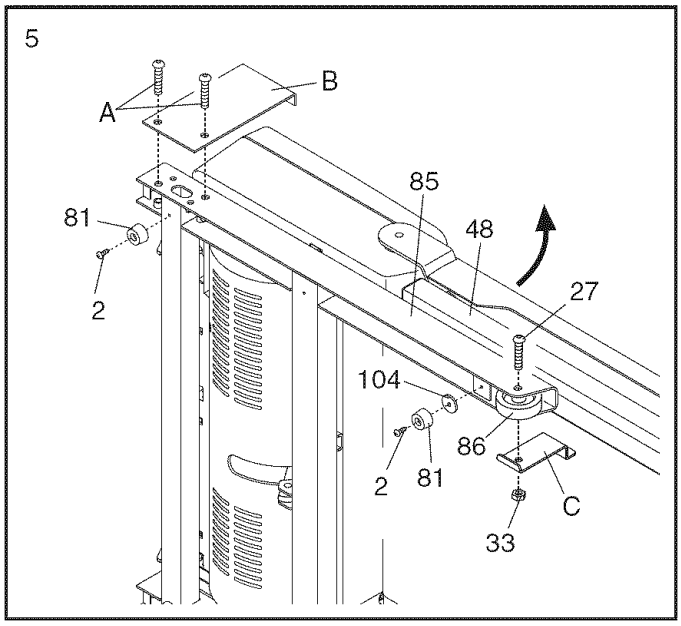

6. With the help of a second person, hold a Bolt Spacer (79) inside the lower end of the Left Upright (73). Insert a M10 x 96mm Bolt (5) with a M10 Star Washer (8) into the Left Upright and the Bolt Spacer. Repeat this step with a second Bolt Spacer (79), Bolt (5), and Star Washer (8).

   Orient the Left Upright (73) and the Left Upright Spacer (83) as shown. Hold the Left Upright Spacer and the Left Upright against the Base (85). Finger tighten the M10 x 96mm Bolts (5); **do not fully tighten the Bolts yet.**

   Press a Base Endcap (82) into the Base (85).

   With the help of a second person, tip the treadmill so that the Base (85) is flat on the floor.

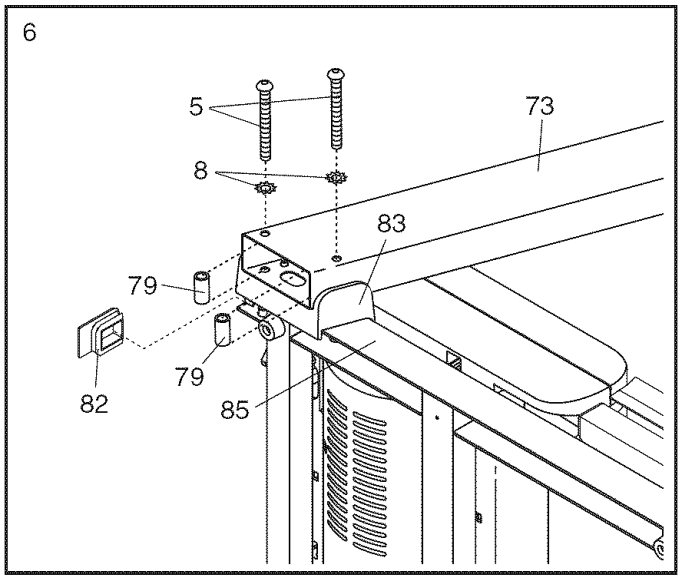

7. Set the Console (87) face down on a soft surface to avoid scratching the Console. Identify the Right Handrail (90), which has a large hole in the location shown. Hold the Right Handrail near the Console. Attach the console ground wire to the Right Handrail with an 1/2" Screw (3).

   Next, insert the console wire into the large hole in the Right Handrail (90) and out of the top as shown. Attach the Right Handrail with three M4 x 19mm Screws (1). **Make sure that no wires are pinched. Start all three Screws before tightening any of them; do not overtighten the Screws.**

   Attach the Left Handrail (not shown) to the Console (87) in the same way. Note: There are no wires on the left side of the Console.

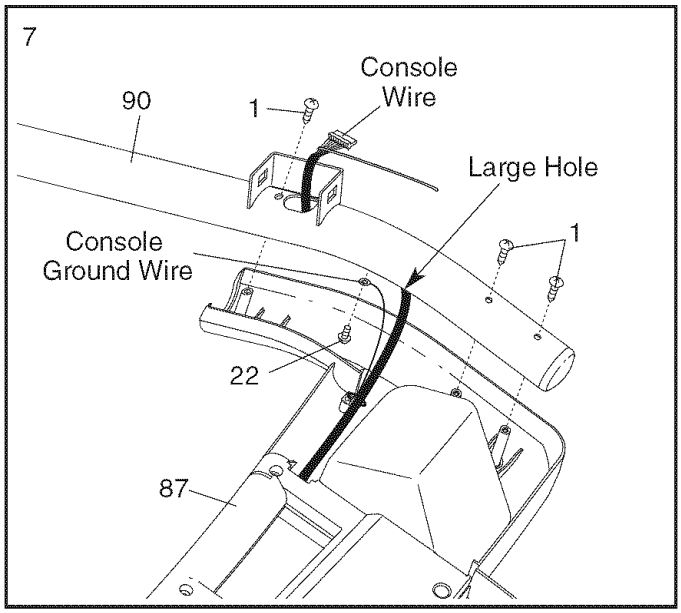

8. Have a second person hold the console assembly near the Right Upright (78). Remove the wire tie from the Upright Wire (77) and console wire. Cut the plastic ties from the brackets on the Right Handrail (90) and Left Handrail (not shown).

   Connect the Upright Wire (77) to the console wire. **See the inset drawing. The connectors should slide together easily and snap into place.** If they do not, turn one connector and try again. **IF THE CONNECTORS ARE NOT CONNECTED PROPERLY, THE CONSOLE MAY BE DAMAGED WHEN THE POWER IS TURNED ON.** Then, insert the connectors into the Right Upright (78).

   Set the console assembly on the Right Upright (78) and the Left Upright (not shown). Make sure that no wires are pinched.

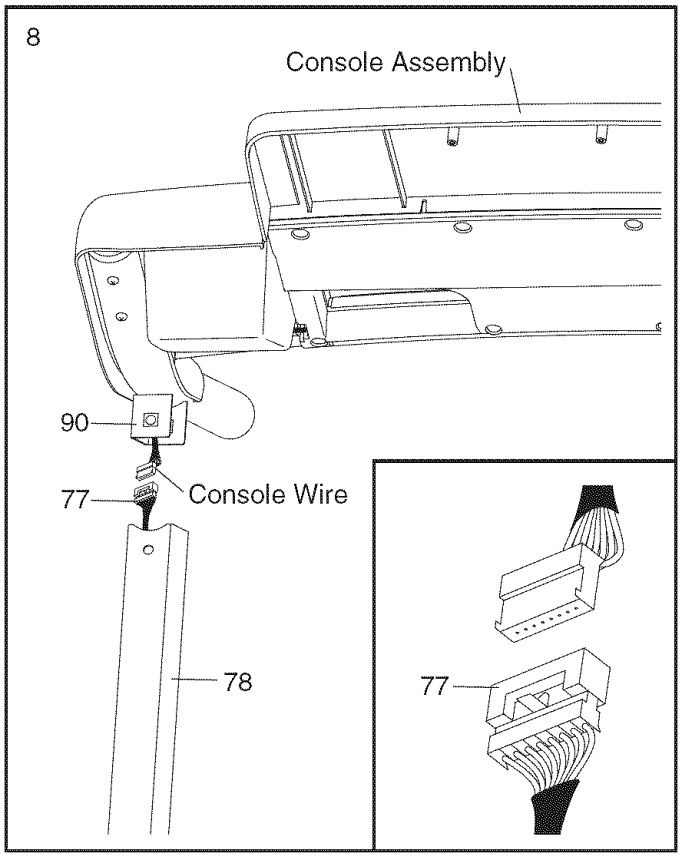

9. Finger tighten two M8 x 25mm Bolts (6) with two M8 Star Washers (10) into the Left Upright (73) and the Left Handrail (89).

   Next, finger tighten two M8 x 25mm Bolts (6) with two M8 Star Washers (10) into the Right Upright (78) and the Right Handrail (90). **Then, tighten all four Handrail Bolts.**

   See steps 4 and 6. Tighten the four M10 x 96mm Bolts (5) (not shown).

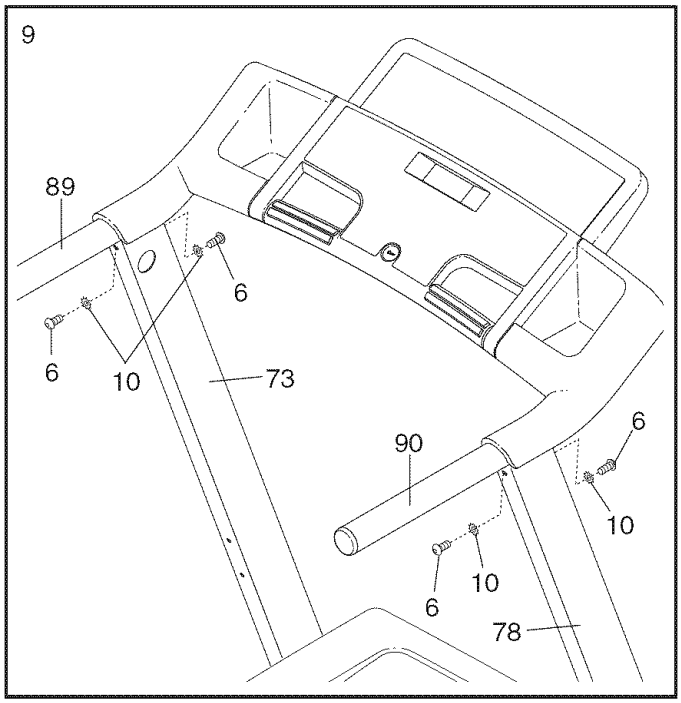

10. Press the Latch Insert (70) into the Left Upright (73).

    Remove the knob from the pin. Make sure that the collar and the spring are on the pin. Insert the pin into the Latch Insert (70), and tighten the knob back onto the pin.

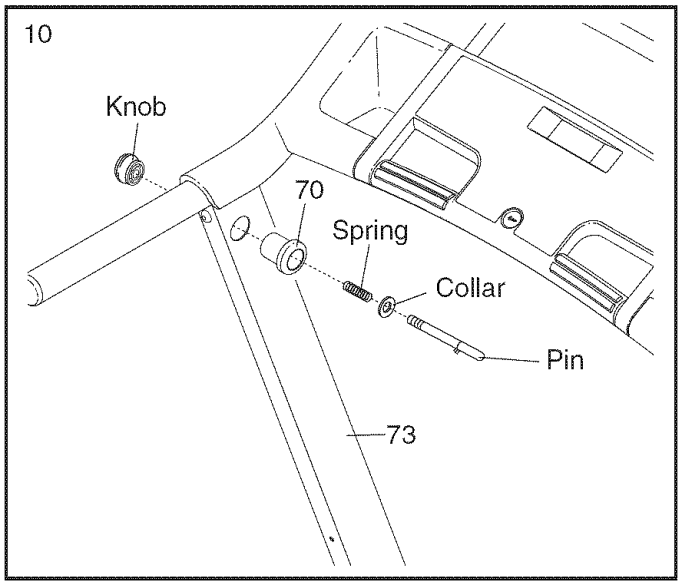

11. Attach the Left Crosswalk Arm (71) to the Left Upright (73) with two M10 Star Washers (8), two 1/4" Washers (9), and two 1/4" x 3 1/2" Bolts (4). **Make sure that the Left Crosswalk Arm is on the side of the Console (87) shown.**

    Attach the Right Crosswalk Arm (not shown) in the same way.

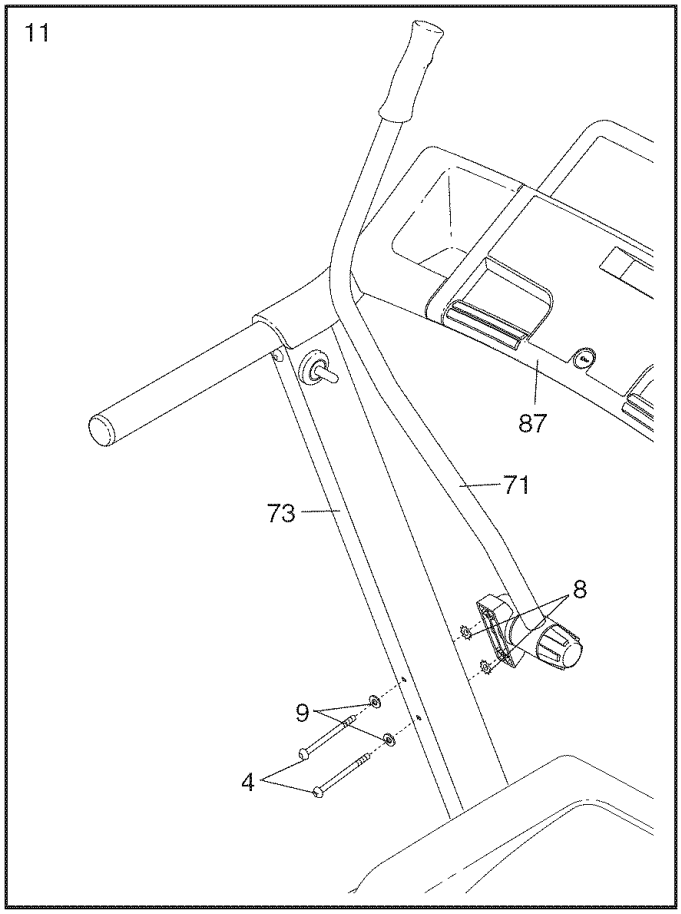

12. **Make sure that all parts are properly tightened before you use the treadmill.** If there are sheets of clear plastic on the treadmill decals, remove the plastic. To protect the floor or carpet, place a mat under the treadmill. Keep the included hex keys in a secure place; the large hex key is used to adjust the walking belt (see pages 19 and 20).

OPERATION AND ADJUSTMENT

THE PRE-LUBRICATED WALKING BELT

Your treadmill features a walking belt coated with high-performance lubricant. **IMPORTANT: Never apply silicone spray or other substances to the walking belt or the walking platform. Such substances will deteriorate the walking belt and cause excessive wear.**

HOW TO PLUG IN THE POWER CORD

⚠DANGER: Improper connection of the equipment-grounding conductor can result in an increased risk of electric shock. Check with a qualified electrician or serviceman if you are in doubt as to whether the product is properly grounded. Do not modify the plug provided with the product—if it will not fit the outlet, have a proper outlet installed by a qualified electrician.

Your treadmill, like any other type of sophisticated electronic equipment, can be seriously damaged by sudden voltage changes in your home's power. Voltage surges, spikes, and noise interference can result from weather conditions or from other appliances being turned on or off. **To decrease the possibility of your treadmill being damaged, always use a surge suppressor with your treadmill (see drawing 1 at the right). To purchase a surge suppressor, see your local Sears store or call the telephone number on the back cover of this manual and order part number 146148, or see your local electronics store.**

Use only a single-outlet surge suppressor that is UL 1449 listed as a transient voltage surge suppressor (TVSS). The surge suppressor must have a UL suppressed voltage rating of 400 volts or less and a minimum surge dissipation of 450 joules. The surge suppressor must be electrically rated for 120 volts AC and 15 amps. There must be a monitoring light on the surge suppressor to indicate whether it is functioning properly. Failure to use a properly functioning surge suppressor could result in damage to the control system of the treadmill. If the control system is damaged, the walking belt may change speed, accelerate, or stop unexpectedly, which may result in a fall and serious injury.

This product must be grounded. If it should malfunction or break down, grounding provides a path of least resistance for electric current to reduce the risk of electric shock. This product is equipped with a cord having an equipment-grounding conductor and a grounding plug. **Plug the power cord into a surge suppressor, and plug the surge suppressor into an appropriate outlet that is properly installed and grounded in accordance with all local codes and ordinances. Important: The treadmill is not compatible with GFCI-equipped outlets.**

This product is for use on a nominal 120-volt circuit, and has a grounding plug that looks like the plug illustrated in drawing 1 below. A temporary adapter that looks like the adapter illustrated in drawing 2 may be used to connect the surge suppressor to a 2-pole receptacle as shown in drawing 2 if a properly grounded outlet is not available.

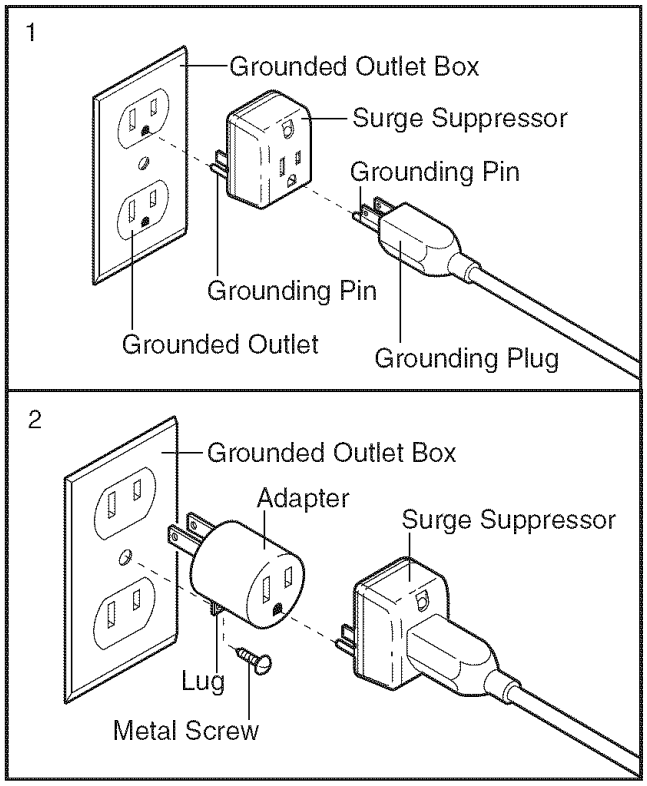

The temporary adapter should be used only until a properly grounded outlet (drawing 1) can be installed by a qualified electrician.

The green-colored rigid ear, lug, or the like extending from the adapter must be connected to a permanent ground such as a properly grounded outlet box cover. Whenever the adapter is used it must be held in place by a metal screw. **Some 2-pole receptacle outlet box covers are not grounded. Contact a qualified electrician to determine if the outlet box cover is grounded before using an adapter.**

CONSOLE DIAGRAM

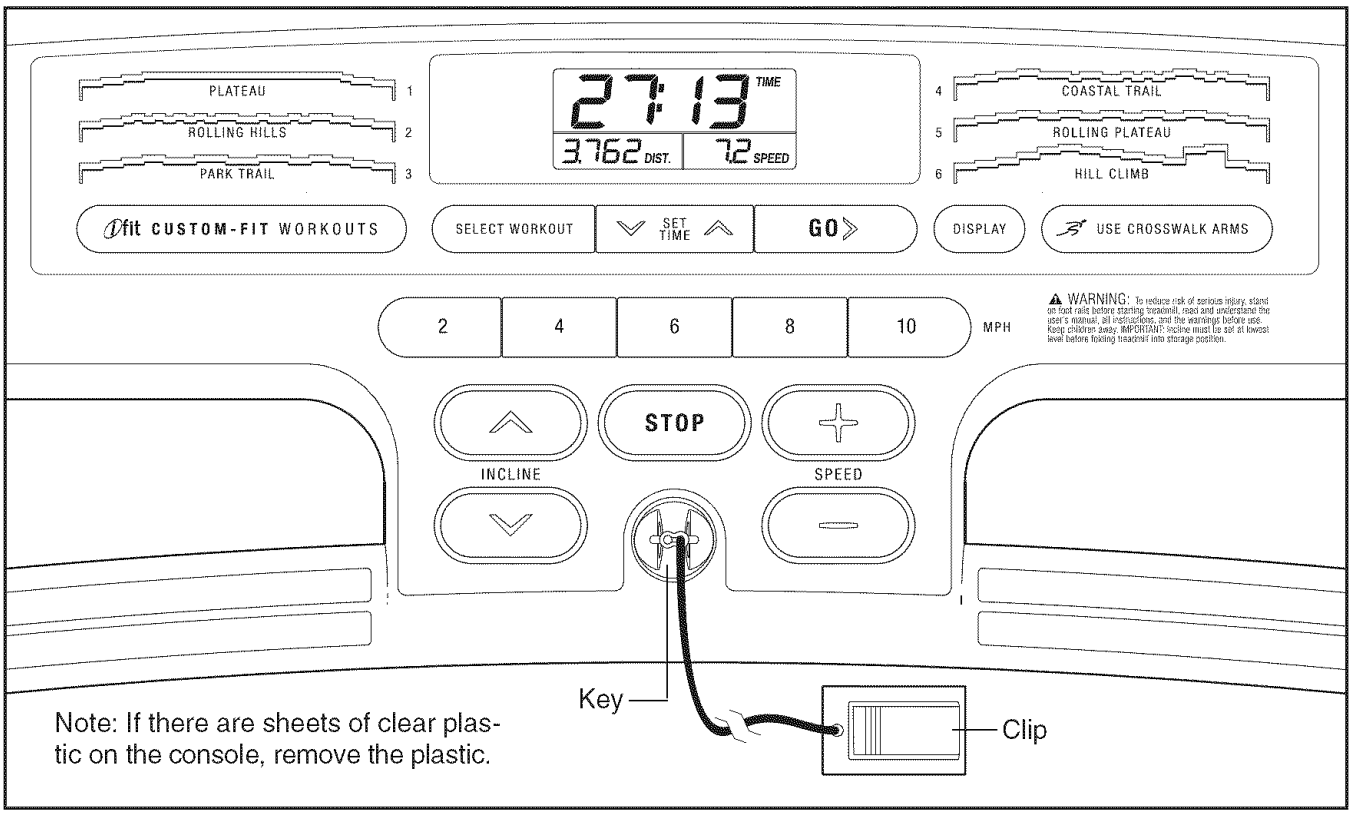

Note: If there are sheets of clear plastic on the console, remove the plastic.

FEATURES OF THE CONSOLE

The treadmill console offers an impressive array of features designed to make your workouts more effective and enjoyable.

When you use the manual mode, you can change the speed and incline of the treadmill with the touch of a button. As you exercise, the console will display instant exercise feedback. You can even measure your heart rate using the handgrip pulse sensor.

In addition, the console offers six iFit custom-fit preset workouts, three of these use the crosswalk arms. Each workout automatically controls the speed and incline of the treadmill as it guides you through an effective exercise session.

To use the manual mode of the console, follow the steps beginning on page 13. **To use a preset workout,** see page 15.

IMPORTANT: If there is a sheet of clear plastic on the console, remove the plastic. To prevent damage to the walking platform, wear clean athletic shoes while using the treadmill. The first time you use the treadmill, observe the alignment of the walking belt, and center the walking belt if necessary (see pages 19 and 20).

Note: The console can display speed and distance in either miles or kilometers. To find out which unit of measurement is selected or to change the unit of measurement, see THE INFORMATION MODE on page 16. Note: For simplicity, all instructions in this section refer to miles.

HOW TO TURN ON THE POWER

IMPORTANT: If the treadmill has been exposed to cold temperatures, allow it to warm to room temperature before turning on the power. If you do not do this, the console displays or other electrical components may become damaged.

Plug in the power cord (see page 11). Next, locate the reset/off circuit breaker on the treadmill frame near the power cord. Switch the circuit breaker to the reset position.

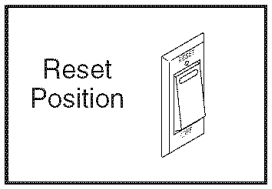

IMPORTANT: The console features a display demo mode, designed to be used if the treadmill is displayed in a store. If the displays light as soon as you plug in the power cord and switch the circuit breaker to the reset position, the demo mode is turned on. To turn off the demo mode, hold down the Stop button for a few seconds. If the displays remain lit, see THE INFORMATION MODE on page 16 to turn off the demo mode.

Next, stand on the foot rails of the treadmill. Find the clip attached to the key (see the drawing on page 12) and slide the clip onto the waistband of your clothes. Then, insert the key into the console. After a moment, the displays will light. **IMPORTANT: In an emergency situation, the key can be pulled from the console, causing the walking belt to slow to a stop. Test the clip by carefully taking a few steps backward; if the key is not pulled from the console, adjust the position of the clip.**

HOW TO USE THE MANUAL MODE

1. **Insert the key into the console.**

   See HOW TO TURN ON THE POWER to the left.

2. **Select the manual mode.**

   When the key is inserted, the manual mode will be selected. If a preset workout has been selected, remove the key and then reinsert it.

3. **Start the walking belt.**

   To start the walking belt, press the Go button, the Speed increase button, or one of the speed buttons numbered 2 through 10.

   If you press the Go button or the Speed increase button, the walking belt will begin to move at 1 mph. As you exercise, change the speed of the walking belt as desired by pressing the Speed increase and decrease buttons. Each time you press a button, the speed setting will change by 0.1 mph; if you hold down a button, the speed setting will change in increments of 0.5 mph. Note: After you press a button, it may take a moment for the walking belt to reach the selected speed setting.

   If you press one of the numbered speed buttons, the walking belt will gradually increase in speed until it reaches the selected speed setting.

   To stop the walking belt, press the Stop button. The time will begin to flash in the display. To restart the walking belt, press the Go button or the Speed increase button.

4. **Change the incline of the treadmill as desired.**

   To change the incline of the treadmill, press the Incline increase or decrease buttons. Each time you press the Incline increase or decrease button, the incline will change by 0.5%. Note: After you press a button, it may take a moment for the treadmill to reach the selected incline setting.

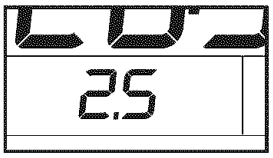

5. **Follow your progress with the displays.**

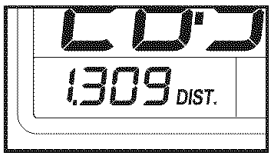

The lower left display—As you exercise, the lower left display can show the elapsed time and the distance that you have walked or run. The lower left display will also show the incline of the treadmill each time the incline level changes.

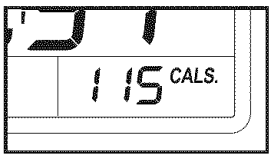

The lower right display—The lower right display can show the approximate number of calories that you have burned and the speed of the walking belt. The display also shows your heart rate when you use the handgrip pulse sensor (see step 6).

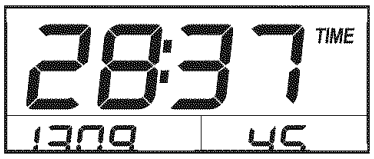

The upper display—The upper display can show the elapsed time, the distance that you have walked or run, the approximate number of calories that you have burned, or the speed of the walking belt. Press the Display button repeatedly until the upper display shows the information that you are most interested in viewing. Note: While information is shown in the upper display, the same information will not be shown in the lower displays.

To reset the displays, press the Stop button, remove the key, and then reinsert the key.

6. **Measure your heart rate if desired.**

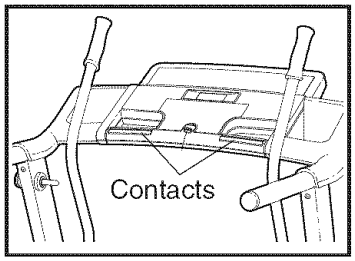

Before using the handgrip pulse sensor, remove the sheets of clear plastic from the metal contacts on the pulse bar. In addition, make sure that your hands are clean.

To measure your heart rate, **stand on the foot rails** and hold the pulse bar with your palms on the metal contacts. **Avoid moving your hands**. When your pulse is detected, a heart symbol in the lower right display will flash each time your heart beats, one or two dashes will appear, and then your heart rate will be shown. **For the most accurate heart rate reading, continue to hold the contacts for about 15 seconds.**

7. **When you are finished exercising, remove the key from the console.**

Step onto the foot rails, press the Stop button, and **adjust the incline of the treadmill to the lowest setting. The incline must be at the lowest setting or you may damage the treadmill when you fold it to the storage position.** Next, remove the key from the console and put it in a secure place.

When you are finished using the treadmill, switch the reset/off circuit breaker to the "off" position and unplug the power cord. **IMPORTANT: If you do not do this, the treadmill's electrical components may wear prematurely.**

HOW TO USE A PRESET WORKOUT

1. **Insert the key into the console.**

   See HOW TO TURN ON THE POWER on page 13.

2. **Select a preset workout.**

   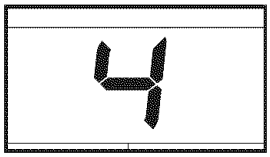

   To select a preset workout, press the Select Workout button repeatedly until the number of the desired workout appears in the upper display. Note: The name, number, and profile of each workout is listed on the console.

   When you select a preset workout, the incline level of the workout will flash in the lower left display, the speed setting will flash in the upper display, and then the workout length will appear in the lower left display.

3. **Select length of workout if desired.**

   If you have selected workout 1, 2, or 3, you can set the length of the workout to a time between 15 and 45 minutes, in increments of 5 minutes. To set the length of the workout press the Set Time increase or decrease button until the desired time is selected. The new workout settings will appear in the displays.

4. **Press the Go button or the Speed increase button to start the workout.**

   A moment after you press the button, the treadmill will automatically adjust to the first speed and incline settings of the workout. Hold the handrails and begin walking.

   Each workout is divided into 30 one-minute segments, unless you have changed the length of the workout (see step 3). One speed setting and one incline setting are programmed for each segment. Note: The same speed setting and/or incline setting may be programmed for two or more consecutive segments.

   Tones will sound at the end of each segment. Three seconds before the speed and/or incline of the treadmill is about to change, the Speed display and/or Incline display will flash and a series of tones will sound to alert you. The treadmill will then automatically adjust to the speed and/or incline settings for the next segment.

   If you have selected workout 4, 5 or 6, you will be prompted to use the crosswalk arms. When the crosswalk indicator lights up, move the crosswalk arms forward and backward as you walk on the treadmill. This action exercises your arms, shoulders, and back for a total body workout.

   The workout will continue in this way until the last segment ends. The walking belt will then slow to a stop.

   If the speed or incline setting is too high or too low at any time during the workout, you can manually override the setting by pressing the speed or incline buttons. **Note: When the next segment of the workout begins, the treadmill will automatically adjust to the speed and incline settings for the next segment.**

   To stop the workout at any time, press the Stop button. To restart the workout, press the Go button. The walking belt will begin to move at 1 mph. When the next segment of the workout begins, the treadmill will automatically adjust to the speed and incline settings for the next segment.

5. **Follow your progress with the displays.**

   See step 5 on page 14.

6. **Measure your heart rate if desired.**

   See step 6 on page 14.

7. **When you are finished exercising, remove the key from the console.**

   See step 7 on page 14.

THE INFORMATION MODE

The console features an information mode that keeps track of the total distance that the walking belt has moved and the total number of hours that the treadmill has been used. The information mode also allows you to select a measurement system of miles or kilometers, and turn on and off the display demo mode.

To select the information mode, hold down the Stop button while inserting the key into the console and then release the Stop button. When the information mode is selected, the following information will be shown:

An "E" for English miles or an "M" for metric kilometers will appear in the lower right display. Press the Speed increase button to change the unit of measurement if desired.

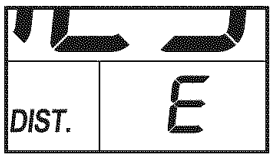

The lower left display will show the total number of miles (or kilometers) that the walking belt has moved.

The upper display will show the total number of hours the treadmill has been used.

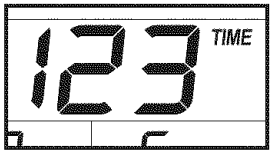

Note: The console features a display demo mode, designed to be used if the treadmill is displayed in a store. While the demo mode is turned on, the console will function normally when you plug in the power cord, switch the circuit breaker to the reset position, and insert the key into the console. However, when you remove the key, the displays will remain lit, although the buttons will not function. If the demo mode is turned on, a "d" will appear in the lower right display while the information mode is selected. To turn on or off the demo mode, press the Speed decrease button.

To exit the information mode, remove the key from the console.

HOW TO USE THE CROSSWALK ARMS

As you walk on the treadmill, you can hold the handrails or use the crosswalk arms. To exercise your arms, shoulders, and back for a total body workout, move the crosswalk arms forward and back as you walk on the treadmill.

To vary the intensity of your upper body exercise, the resistance of the crosswalk arms can be adjusted. To increase the resistance, turn the resistance knobs clockwise; to decrease the resistance, turn the knobs counterclockwise.

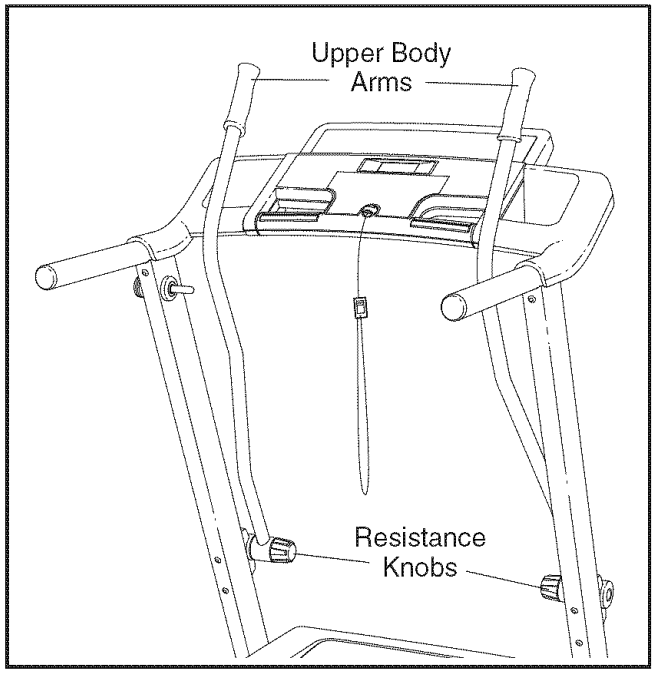

HOW TO FOLD AND MOVE THE TREADMILL

HOW TO FOLD THE TREADMILL FOR STORAGE

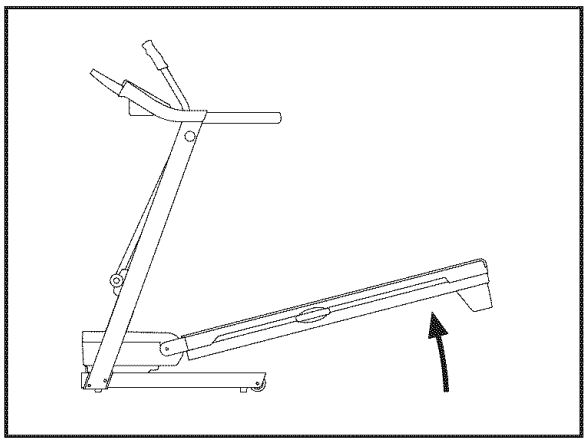

Before folding the treadmill, adjust the incline to the lowest position. If you do not do this, you may damage the treadmill when you fold it. Remove the key and unplug the power cord. CAUTION: You must be able to safely lift 45 lbs. (20 kg) to raise, lower, or move the treadmill.

1. **Hold the metal frame firmly in the location shown by the arrow at the right. CAUTION: To decrease the possibility of injury, do not lift the frame by the plastic foot rails. Make sure to bend your legs and keep your back straight as you raise the frame.** Raise the frame about halfway to the vertical position.

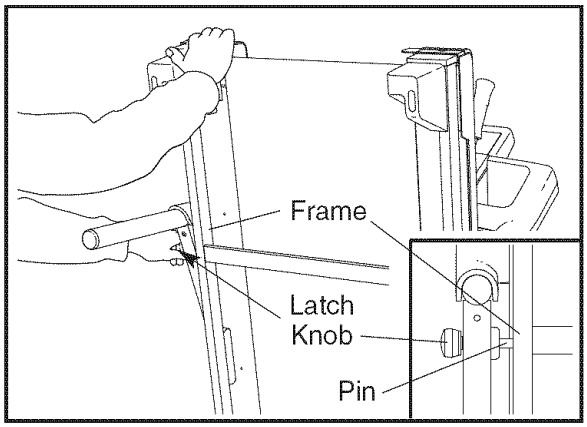

2. Move your right hand to the position shown and hold the treadmill firmly. Using your left hand, pull the latch knob to the left and hold it. Raise the frame until the pin is aligned with the gap between the frame and platform, and then slowly release the latch knob. **Make sure that the latch pin is fully inserted into the gap.**

   To protect the floor or carpet from damage, place a mat under the treadmill. Keep the treadmill out of direct sunlight. Do not leave the treadmill in the storage position in temperatures above 85° F (30° C).

HOW TO MOVE THE TREADMILL

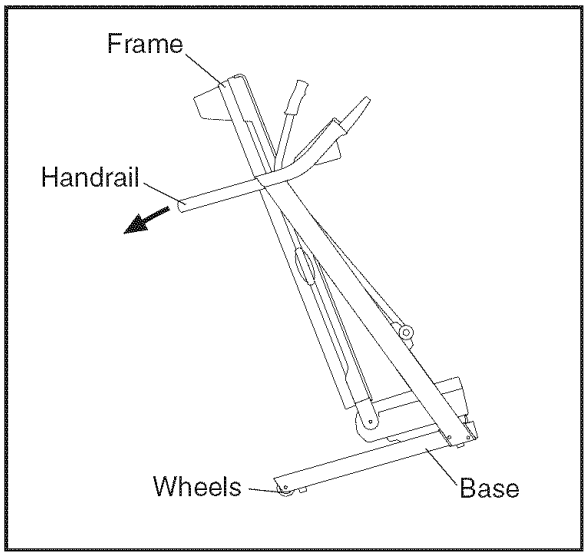

Before moving the treadmill, convert it to the storage position as described above. **Make sure that the frame is held securely by the latch pin.**

1. Hold a handrail and the frame and place one foot against one of the wheels.

2. Tilt the treadmill back until it rolls freely on the wheels. Carefully move the treadmill to the desired location. **Never move the treadmill without tipping it back. To reduce the risk of injury, use extreme caution while moving the treadmill. Do not attempt to move the treadmill over an uneven surface.**

3. Place one foot against a wheel, and carefully lower the treadmill until it is resting in the storage position.

HOW TO LOWER THE TREADMILL FOR USE

1. Hold the upper end of the treadmill with your right hand. Pull the latch knob to the left. It may be necessary to push the frame forward as you pull the knob to the left. Pivot the frame downward and release the latch knob.

2. **Hold the metal frame firmly with both hands and lower it to the floor. CAUTION: Do not grip only the plastic foot rails or drop the frame to the floor. Bend your legs and keep your back straight.**

TROUBLESHOOTING

Most treadmill problems can be solved by following the simple steps below. Find the symptom that applies, and follow the steps listed. If further assistance is needed, call the telephone number listed on the back cover of this manual.

PROBLEM: The power does not turn on

SOLUTION: a. Make sure that the power cord is plugged into a surge suppressor, and that the surge suppressor is plugged into a properly grounded outlet (see page 11). Use only a single-outlet surge suppressor that meets all of the specifications described on page 11. Important: The treadmill is not compatible with GFCI-equipped outlets.

b. After the power cord has been plugged in, make sure that the key is inserted into the console.

c. Check the reset/off circuit breaker located on the treadmill frame near the power cord. If the switch protrudes as shown, the circuit breaker has tripped. To reset the circuit breaker, wait for five minutes and then press the switch back in.

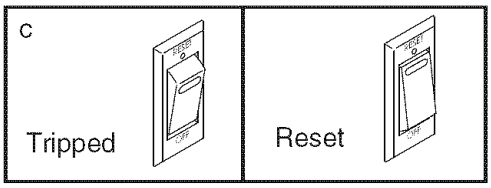

PROBLEM: The power turns off during use

SOLUTION: a. Check the reset/off circuit breaker (see the drawing above). If the circuit breaker has tripped, wait for five minutes and then press the switch back in.

b. Make sure that the power cord is plugged in. If the power cord is plugged in, unplug it, wait for five minutes, and then plug it back in.

c. Remove the key from the console. Reinsert the key into the console.

d. If the treadmill still will not run, please see the back cover of this manual.

PROBLEM: The incline of the treadmill does not change correctly

SOLUTION: a. With the key in the console, press one of the Incline buttons. **While the incline is changing, remove the key.** After a few seconds, re-insert the key. The treadmill will automatically rise to the maximum incline level and then return to the minimum level. This will recalibrate the incline system.

PROBLEM: The displays of the console do not function properly

SOLUTION: a. Remove the key from the console and **UNPLUG THE POWER CORD.** Remove the three M4 x 19mm Washer Head Screws (13) and carefully pivot the Hood (53) off.

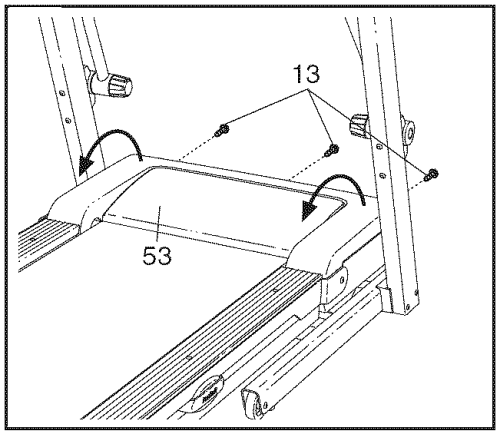

Locate the Reed Switch (54) and the Magnet (42) on the left side of the Pulley (44). Turn the Pulley until the Magnet is aligned with the Reed Switch. **Make sure that the gap between the Magnet and the Reed Switch is about 1/8 in. (3 mm).** If necessary, loosen the M4 x 19mm Screw (1), move the Reed Switch slightly, and then retighten the Screw. Reattach the Hood (not shown), and run the treadmill for a few minutes to check for a correct speed reading.

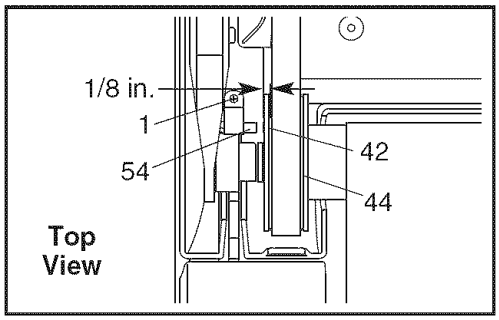

PROBLEM: The console displays remain lit when you remove the key from the console

SOLUTION: a. The console features a display demo mode, designed to be used if the treadmill is displayed in a store. If the displays remain lit when you remove the key, the demo mode is turned on. To turn off the demo mode, hold down the Stop button for a few seconds. If the displays are still lit, see THE INFORMATION MODE on page 16 to turn off the demo mode.

PROBLEM: The walking belt slows when walked on

SOLUTION: a. Use only a single-outlet surge suppressor that meets all of the specifications described on page 11.

b. If the walking belt is overtightened, treadmill performance may decrease and the walking belt may become damaged. Remove the key and **UNPLUG THE POWER CORD**. Using the hex key, turn both rear roller bolts counterclockwise, 1/4 of a turn. When the walking belt is properly tightened, you should be able to lift each edge of the walking belt 2 to 3 in. (5 to 7 cm) off the walking platform. Be careful to keep the walking belt centered. Then, plug in the power cord, insert the key, and run the treadmill for a few minutes. Repeat until the walking belt is properly tightened.

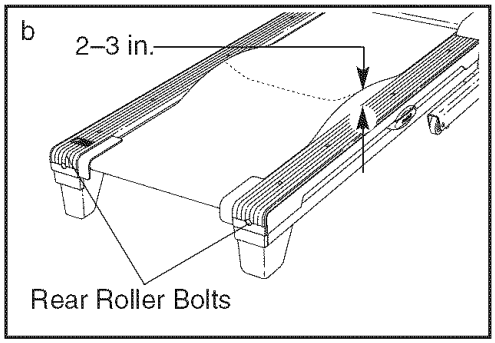

c. If the walking belt still slows when walked on, see the back cover of this manual.

PROBLEM: The walking belt is off-center or slips when walked on

SOLUTION: a. **If the walking belt is off-center,** first remove the key and **UNPLUG THE POWER CORD**. **If the walking belt has shifted to the left,** use the hex key to turn the left rear roller bolt clockwise 1/2 of a turn; **if the walking belt has shifted to the right,** turn the bolt counterclockwise 1/2 of a turn. Be careful not to overtighten the walking belt. Then, plug in the power cord, insert the key, and run the treadmill for a few minutes. Repeat until the walking belt is centered.

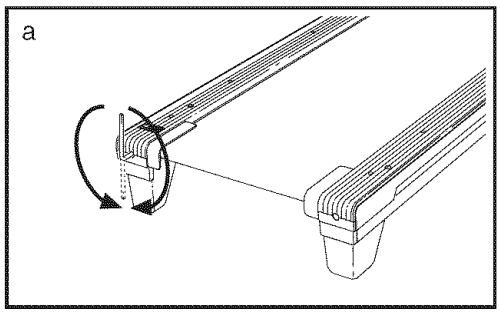

b. **If the walking belt slips when walked on,** first remove the key and **UNPLUG THE POWER CORD**. Using the hex key, turn both rear roller bolts clockwise, 1/4 of a turn. When the walking belt is correctly tightened, you should be able to lift each side of the walking belt 2 to 3 in. (5 to 7 cm) off the walking platform. Be careful to keep the walking belt centered. Then, plug in the power cord, insert the key, and carefully walk on the treadmill for a few minutes. Repeat until the walking belt is properly tightened.

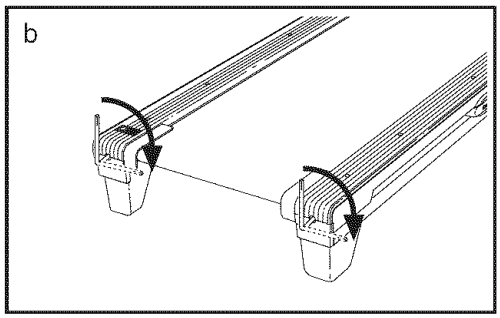

PROBLEM: The crosswalk arms squeak during use

SOLUTION: a. (Note: Correcting this problem requires a small amount of white marine grease, available at hardware stores.) Turn the Resistance Knob (A) counterclockwise and remove it. Next, remove the Resistance Cone (B) and the Crosswalk Arm (76), along with the Resistance Plate (C), Washers (D), Spring Washer (E), Thrust Washers (F), and Thrust Bearing (G). (Note: If the Resistance Plate [C] comes out of the Resistance Cone [B], press it back in.) Apply a **thin layer** of white marine grease to the outer surface of the Resistance Cone (B). Then, reattach all parts in the order shown at the right.

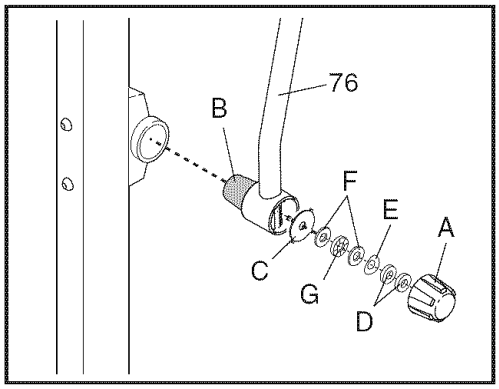

EXERCISE GUIDELINES

⚠ WARNING: Before beginning this or any exercise program, consult your physician. This is especially important for persons over the age of 35 or persons with pre-existing health problems.

The pulse sensor is not a medical device. Various factors may affect the accuracy of heart rate readings. The pulse sensor is intended only as an exercise aid in determining heart rate trends in general.

These guidelines will help you to plan your exercise program. For detailed exercise information, obtain a reputable book or consult your physician. Remember, proper nutrition and adequate rest are essential for successful results.

EXERCISE INTENSITY

Whether your goal is to burn fat or to strengthen your cardiovascular system, exercising at the proper intensity is the key to achieving results. You can use your heart rate as a guide to find the proper intensity level. The chart below shows recommended heart rates for fat burning and aerobic exercise.

165	*155*	*145*	*140*	*130*	*125*	*115*	♥
145	*138*	*130*	*125*	*118*	*110*	*103*	♥
125	*120*	*115*	*110*	*105*	*95*	*90*	♥
20	*30*	*40*	*50*	*60*	*70*	*80*	

To find the proper intensity level, find your age at the bottom of the chart (ages are rounded off to the nearest ten years). The three numbers listed above your age define your "training zone." The lowest number is the heart rate for fat burning, the middle number is the heart rate for maximum fat burning, and the highest number is the heart rate for aerobic exercise.

Burning Fat—To burn fat effectively, you must exercise at a low intensity level for a sustained period of time. During the first few minutes of exercise, your body uses *carbohydrate calories* for energy. Only after the first few minutes of exercise does your body begin to use stored *fat calories* for energy. If your goal is to burn fat, adjust the intensity of your exercise until your heart rate is near the lowest number in your training zone. For maximum fat burning, exercise with your heart rate near the middle number in your training zone.

Aerobic Exercise—If your goal is to strengthen your cardiovascular system, you must perform aerobic exercise, which is activity that requires large amounts of oxygen for prolonged periods of time. For aerobic exercise, adjust the intensity of your exercise until your heart rate is near the highest number in your training zone.

WORKOUT GUIDELINES

Warming up—Start with 5 to 10 minutes of stretching and light exercise. A warm-up increases your body temperature, heart rate, and circulation in preparation for exercise.

Training Zone Exercise—Exercise for 20 to 30 minutes with your heart rate in your training zone. (During the first few weeks of your exercise program, do not keep your heart rate in your training zone for longer than 20 minutes.) Breathe regularly and deeply as you exercise–never hold your breath.

Cooling down—Finish with 5 to 10 minutes of stretching. Stretching increases the flexibility of your muscles and helps to prevent post-exercise problems.

EXERCISE FREQUENCY

To maintain or improve your condition, complete three workouts each week, with at least one day of rest between workouts. After a few months of regular exercise, you may complete up to five workouts each week, if desired. Remember, the key to success is to make exercise a regular and enjoyable part of your everyday life.

PART LIST—Model No. 831.24723.3

R0707A

To locate the parts listed below, see the EXPLODED DRAWING near the end of this manual.

Key No.	Qty.	Description
1	15	M4 x 19mm Screw
2	4	M4 x 25mm Screw
3	1	M4 x 13mm Lift Frame Screw
4	4	1/4" x 3 1/2" Bolt
5	4	M10 x 96mm Bolt
6	4	M8 x 25mm Bolt
7	1	3/8" Star Washer
8	8	M10 Star Washer
9	4	1/4" Washer
10	4	M8 Star Washer
11	5	M4 x 13mm Washer Head Screw
12	12	M4 x 16mm Screw
13	3	M4 x 19mm Washer Head Screw
14	2	M8 x 35mm Screw
15	2	M8 x 90mm Screw
16	1	M10 x 34mm Bolt
17	2	M6 x 70mm Bolt
18	1	3/8" x 1 3/4" Bolt
19	1	3/8" x 1 1/2" Bolt
20	2	3/8" x 1" Bolt
21	1	M6 x 45mm Bolt
22	7	1/2" Screw
23	8	M5 x 25mm Screw
24	2	1/4" x 3/8" Bolt
25	2	3/8" x 3/4" Bolt
26	1	3/8" x 4" Bolt
27	2	M10 x 50mm Bolt
28	4	M4 x 13mm Screw
29	2	M6 Lock Washer
30	2	M6 Washer
31	3	3/8" Nut
32	2	3/8" Motor Nut
33	4	M10 Nut
34	1	Motor Washer
35	2	M8 Flange Nut
36	2	3/8" Lock Nut
37	3	Hood Clip
38	4	Cage Nut
39	1	Left Foot Rail
40	2	Walking Platform Cushion
41	2	Belt Guide
42	1	Magnet
43	1	Motor Belt
44	1	Front Roller/Pulley
45	1	Walking Belt
46	1	Walking Platform
47	1	Right Foot Rail
48	1	Frame
49	1	Warning Decal
50	2	Rear Roller Bracket Plate
51	1	Left Foot
52	1	Right Foot
53	1	Hood
54	1	Reed Switch
55	1	Reed Switch Clip
56	2	Frame Spacer
57	1	Lift Frame/Roller Ground Wire
58	1	Incline Motor
59	2	Rear Roller Bracket
60	1	Motor
61	1	Motor Bracket
62	3	Lift Frame Cable Tie
63	1	Lift Frame
64	1	Filter Wire
65	1	Power Cord
66	1	Controller
67	1	Grommet
68	1	Reset/Off Circut Breaker
69	1	Belly Pan
70	1	Latch Insert
71	1	Left Crosswalk Arm
72	1	Latch Pin Assembly
73	1	Left Upright
74	2	Insert Screw
75	2	Crosswalk Arm Insert
76	1	Right Crosswalk Arm
77	1	Upright Wire
78	1	Right Upright
79	4	Bolt Spacer
80	1	Right Upright Spacer
81	4	Base Pad
82	2	Base Endcap
83	1	Left Upright Spacer
84	2	Caution Decal
85	1	Base
86	2	Wheel
87	1	Console
88	1	Console Base
89	1	Left Handrail
90	1	Right Handrail
91	4	Handrail Endcap
92	2	Cable Tie
93	1	Key/Clip
94	2	Releasable Tie
95	7	8" Cable Tie
96	2	Resistance Assembly
97	2	Hand Grip
98	1	M10 x 30mm Screw
99	1	Lift Motor Spacer
100	1	Rear Roller

Key No.	Qty.	Description
101	1	Hex Key
102	1	Lift Frame/Base Ground Wire
103	2	Frame Endcap
104	2	Base Pad Spacer
105	1	4mm Hex Key
106	1	5mm Hex Key
107	1	6mm Hex Key
108	3	15 1/2" Cable Tie
*	–	8" Blue Wire, 2F
*	–	6" Blue Wire, 2F

Key No.	Qty.	Description
*	–	6" Blue Wire, M/F
*	–	6" Red Wire, M/F
*	–	6" Black Wire, M/F
*	–	8" Green Wire, F/Ring
*	–	User's Manual

*These parts are not illustrated.
Specifications are subject to change without notice.

If a part is missing, call 1-888-533-1333.

EXPLODED DRAWING A—Model No. 831.24723.3

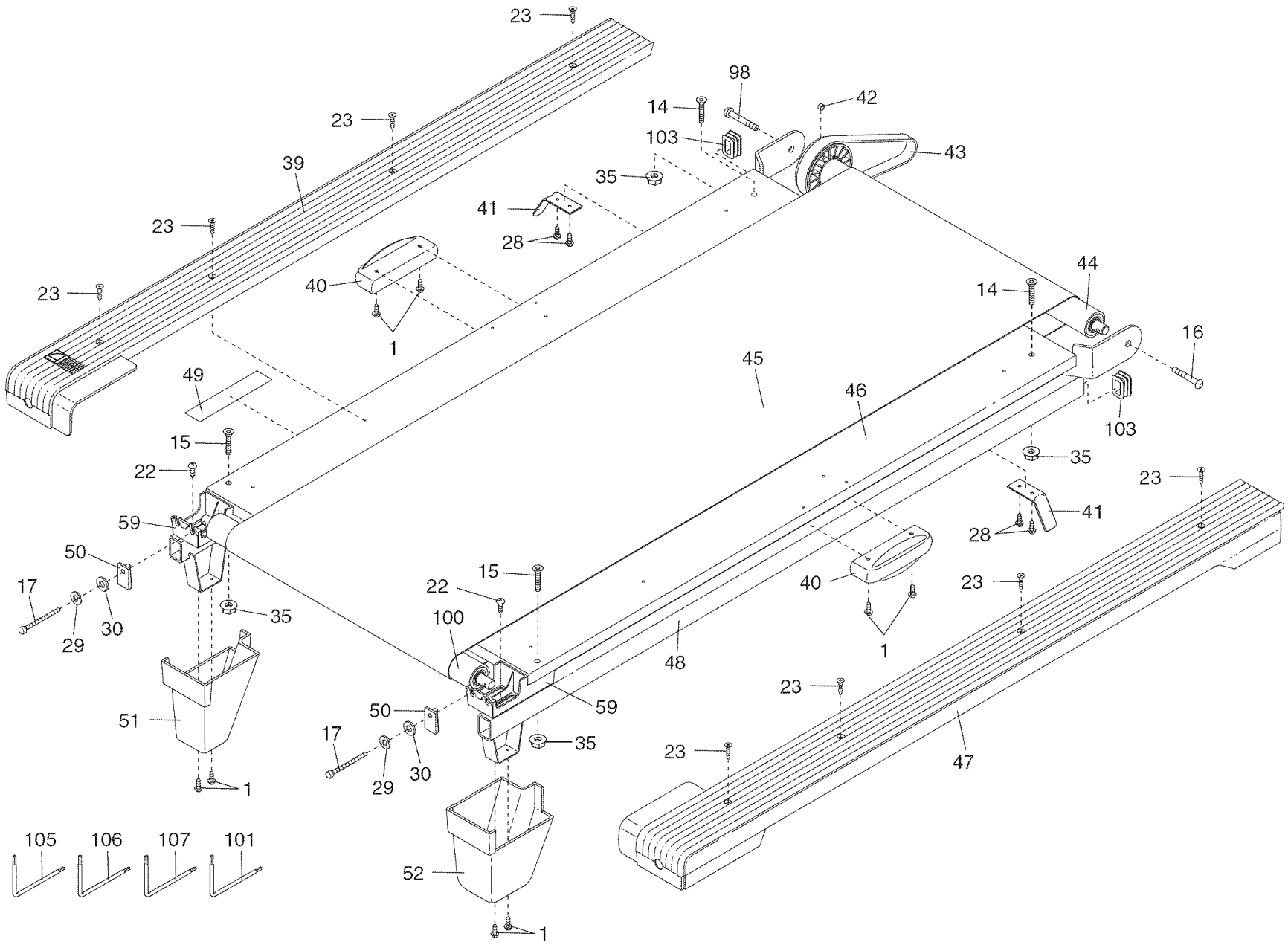

EXPLODED DRAWING B—Model No. 831.24723.3

R0707A

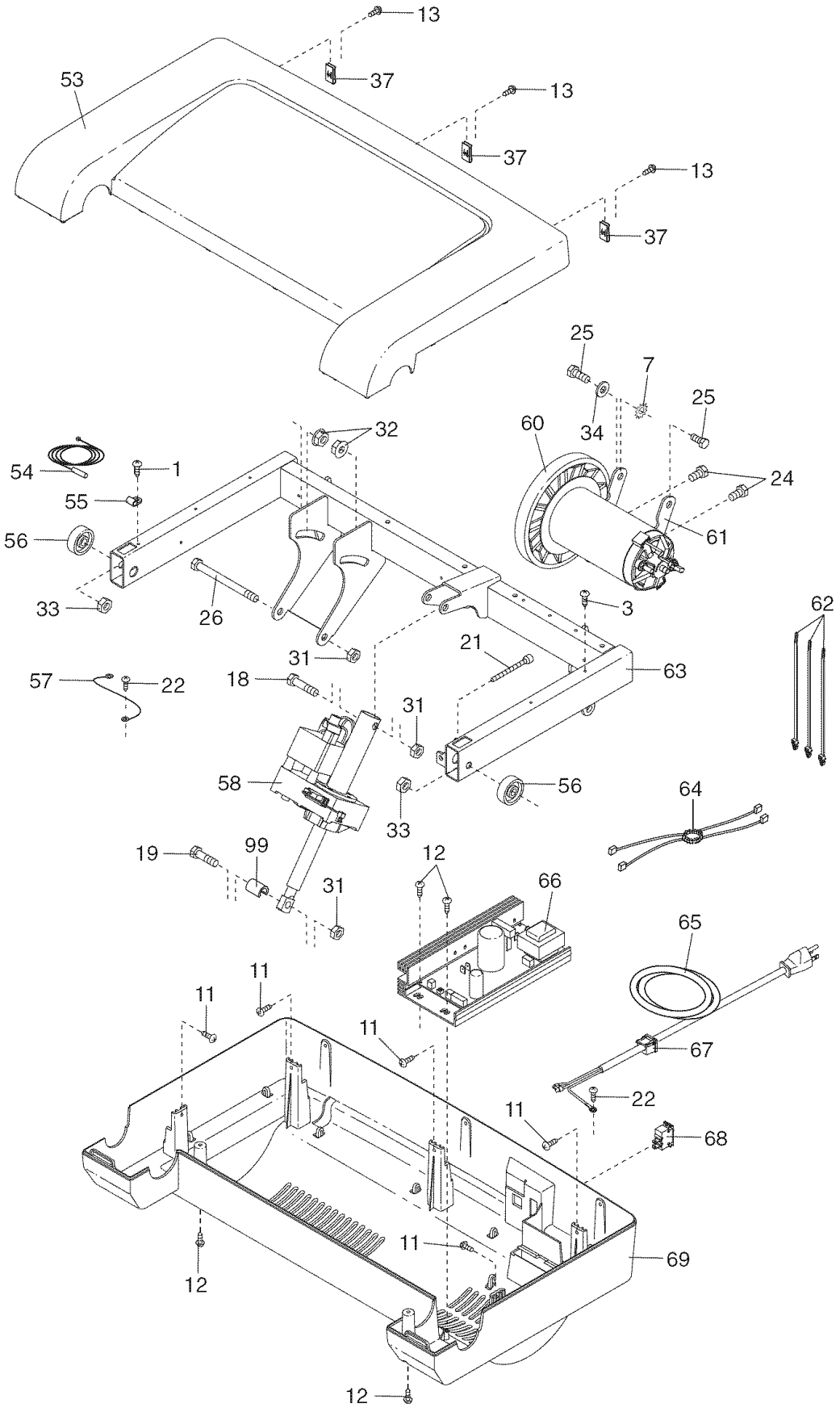

EXPLODED DRAWING C—Model No. 831.24723.3

R0707A

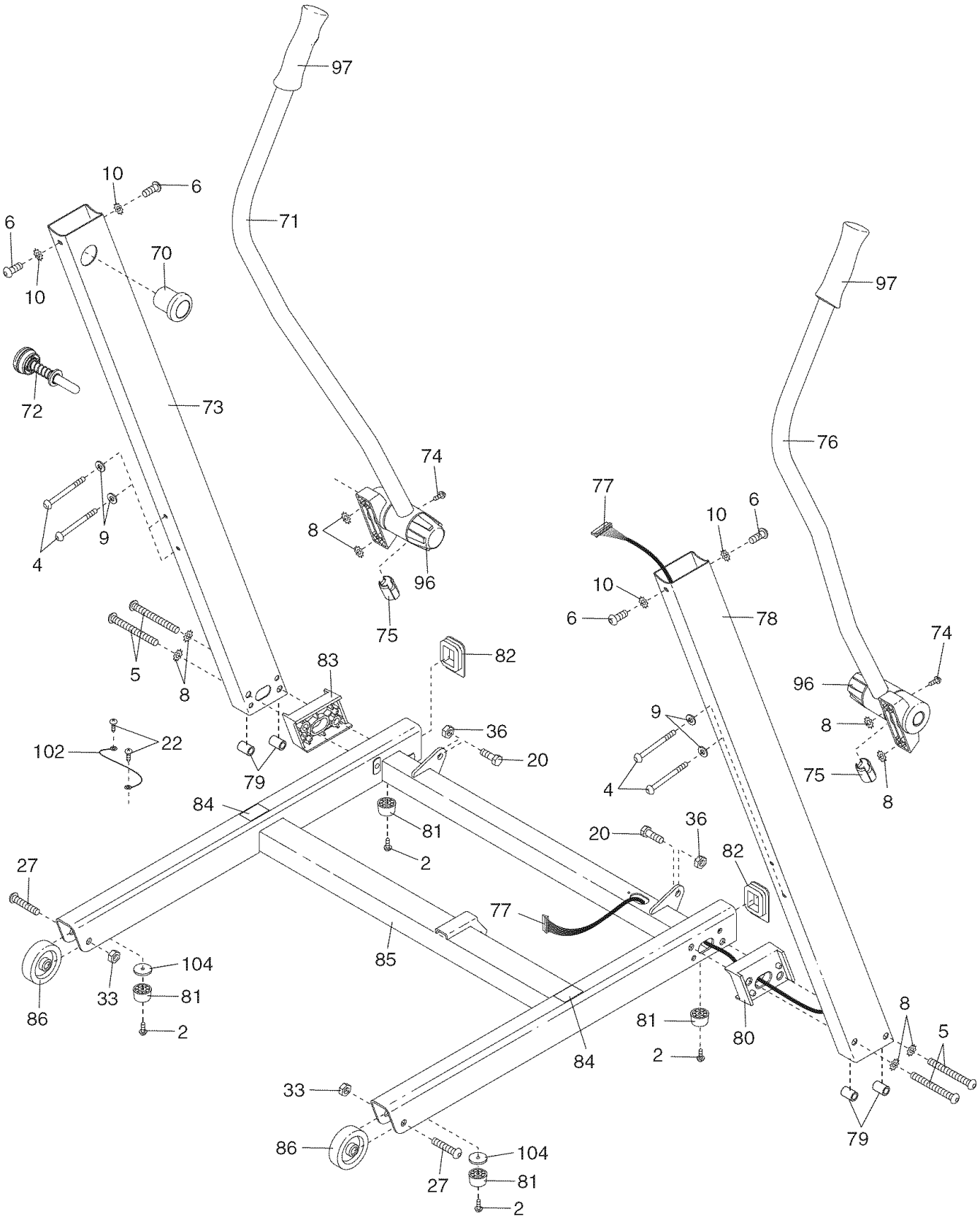

EXPLODED DRAWING D—Model No. 831.24723.3

R0707A

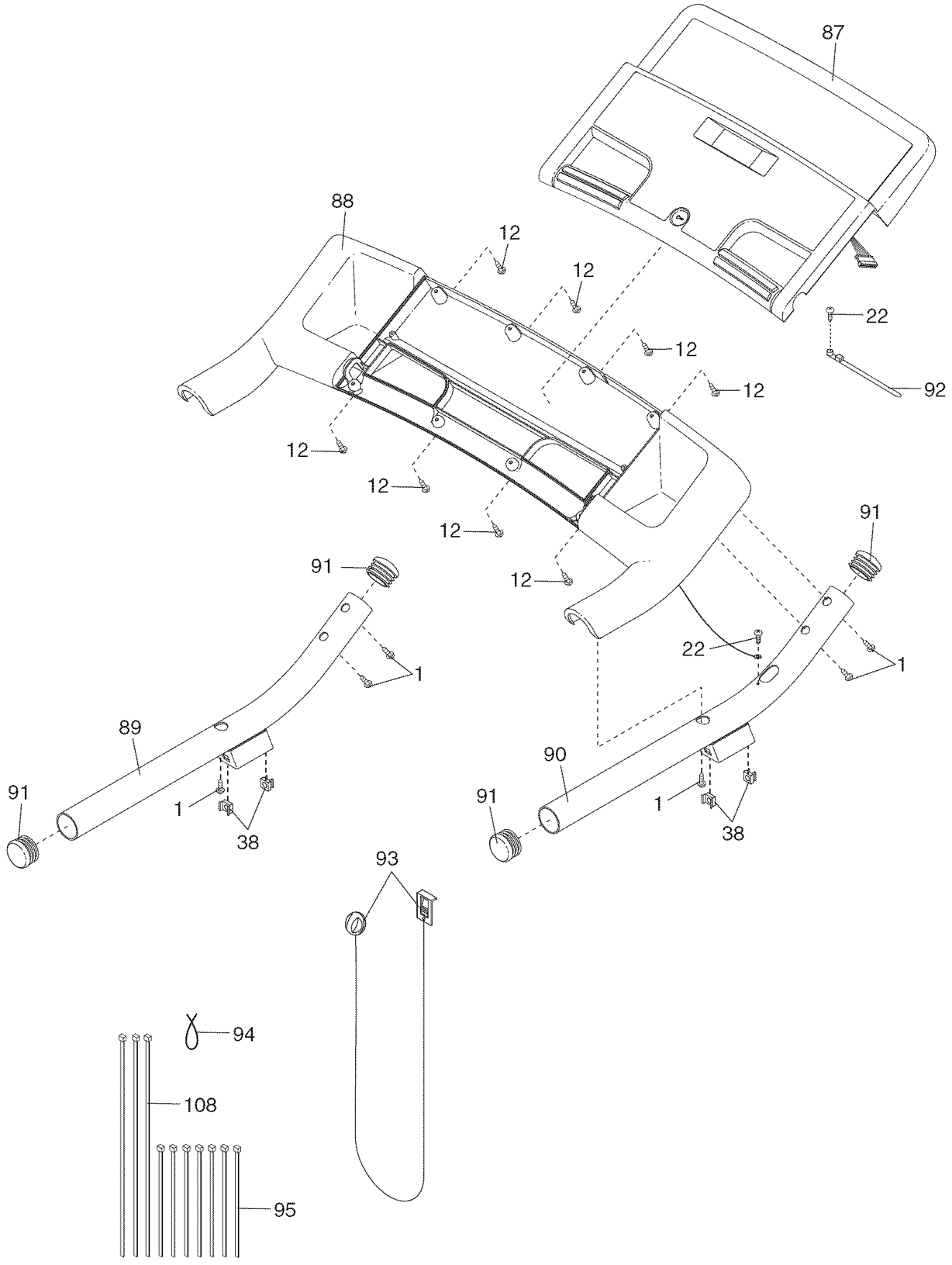

Get it fixed, at your home or ours!

Your Home

For repair—**in your home**—of **all** major brand appliances, lawn and garden equipment, or heating and cooling systems, **no matter who made it, no matter who sold it!**

For the replacement parts, accessories, and user's manuals that you need to do-it-yourself.

For Sears professional installation of home appliances and items like garage door openers and water heaters.

1-800-4-MY-HOME® (1-800-469-4663)
Call anytime, day or night (U.S.A. and Canada)
www.sears.com **www.sears.ca**

Our Home

For repair of carry-in items like vacuums, lawn equipment, and electronics, call or go on-line for the location of your nearest **Sears Parts & Repair Center.**

1-800-488-1222 Call anytime, day or night (U.S.A. only)
www.sears.com

To purchase a protection agreement (U.S.A.) or maintenance agreement (Canada) on a product serviced by Sears:

1-800-827-6655 (U.S.A.) **1-800-361-6665** (Canada)

Para pedir servicio de reparación a domicilio, y para ordenar piezas:

1-888-SU-HOGAR® (1-888-784-6427)

Sears

® Registered Trademark / ™ Trademark / SM Service Mark of Sears Brands, LLC
® Marca Registrada / ™ Marca de Fábrica / SM Marca de Servicio de Sears Brands, LLC

90 DAY FULL WARRANTY

If this Sears Treadmill Exerciser fails due to a defect in material or workmanship within 90 days of the date of purchase, call 1-800-4-MY-HOME® (1-800-469-4663) to arrange for free repair (or replacement if repair proves impossible). The incline motor is warranted for 90 days from the date of purchase; the drive motor is warranted for 5 years from the date of purchase.

This warranty does not apply when the Treadmill Exerciser is used commercially or for rental purposes.

This warranty gives you specific legal rights, and you may also have other rights which vary from state to state.

Sears, Roebuck and Co., Hoffman Estates, IL 60179

Part No. 257976 R0707A

Printed in USA © 2007 ICON IP, Inc.