SONY

3-063-379-**11** (1)

Digital Video Camera Recorder

Mini DV Digital Video Cassette

Operating Instructions

Before operating the unit, please read this manual thoroughly, and retain it for future reference.

Owner's Record

The model and serial numbers are located on the bottom. Record the serial number in the space provided below. Refer to these numbers whenever you call upon your Sony dealer regarding this product.

Model No. **DCR-PC110** Model No. **AC-**_____

Serial No. _____ Serial No. _____

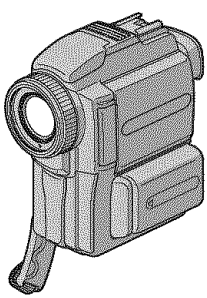

Digital Handycam

InfoLITHIUM™ M SERIES

CM Cassette Memory

MEMORY STICK™

DCR-PC110

©2000 Sony Corporation

Welcome!

Congratulations on your purchase of this Sony Digital Handycam camcorder. With your Digital Handycam, you can capture life's precious moments with superior picture and sound quality. Your Digital Handycam is loaded with advanced features, but at the same time it is very easy to use. You will soon be producing home video that you can enjoy for years to come.

WARNING

To prevent fire or shock hazard, do not expose the unit to rain or moisture.

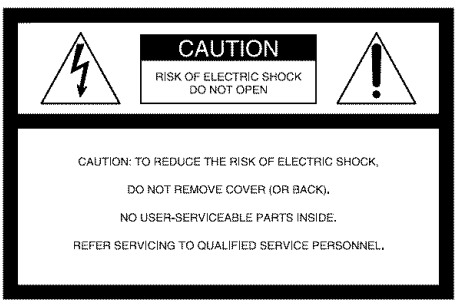

This symbol is intended to alert the user to the presence of uninsulated "dangerous voltage" within the product's enclosure that may be of sufficient magnitude to constitute a risk of electric shock to persons.

This symbol is intended to alert the user to the presence of important operating and maintenance (servicing) instructions in the literature accompanying the appliance.

Never expose the battery pack to temperatures above 140°F (60°C) such as in a car parked in the sun or under direct sunlight.

For customers in the U.S.A. and CANADA

DISPOSAL OF LITHIUM ION BATTERY.

LITHIUM ION BATTERY.
DISPOSE OF PROPERLY.

You can return your unwanted lithium ion batteries to your nearest Sony Service Center or Factory Service Center.

Note: In some areas the disposal of lithium ion batteries in household or business trash may be prohibited.

For the Sony Service Center nearest you call 1-800-222-SONY (United States only).
For the Sony Factory Service Center nearest you call 416-499-SONY (Canada only).

Caution: Do not handle damaged or leaking lithium ion battery.

For the customers in the U.S.A.

If you have any questions about this product, you may call:
Sony Customer Information Center 1-800-222-SONY (7669) or write to:
Sony Customer Information Center 1 Sony Drive, Mail Drop #T1-11, Park Ridge, NJ, 07656.

Declaration of Conformity

Trade Name:	SONY
Model No.:	DCR-PC110
Responsible Party:	Sony Electronics Inc.
Address:	1 Sony Drive, Park Ridge, NJ, 07656 USA
Telephone No.:	201-930-6972

This device complies with Part 15 of the FCC Rules. Operation is subject to the following two conditions: (1) This device may not cause harmful interference, and (2)this device must accept any interference received, including interference that may cause undesired operation.

CAUTION

You are cautioned that any changes or modifications not expressly approved in this manual could void your authority to operate this equipment.

"Memory Stick"

This device complies with Part 15 of the FCC Rules. Operation is subject to the following two conditions: (1) This device may not cause harmful interference, and (2) this device must accept any interference received, including interference that may cause undesired operation.

Note:
This equipment has been tested and found to comply with the limits for a Class B digital device, pursuant to Part 15 of the FCC Rules. These limits are designed to provide reasonable protection against harmful interference in a residential installation. This equipment generates, uses, and can radiate radio frequency energy and, if not installed and used in accordance with the instructions, may cause harmful interference to radio communications. However, there is no guarantee that interference will not occur in a particular installation. If this equipment does cause harmful interference to radio or television reception, which can be determined by turning the equipment off and on, the user is encouraged to try to correct the interference by one or more of the following measures:

— Reorient or relocate the receiving antenna.
— Increase the separation between the equipment and receiver.
— Connect the equipment into an outlet on a circuit different from that to which the receiver is connected.
— Consult the dealer or an experienced radio/TV technician for help.

The shielded interface cable supplied with this equipment must be used with this equipment in order to comply with the limits for a digital device pursuant to Subpart B of Part 15 of FCC Rules.

For customers in CANADA

CAUTION
TO PREVENT ELECTRIC SHOCK, MATCH WIDE BLADE OF PLUG TO WIDE SLOT, FULLY INSERT.

"Memory Stick"
This Class B digital apparatus complies with Canadian ICES-003.

Table of contents

Checking supplied accessories 5

Quick Start Guide 6

Getting started

Using this manual 8
Step 1 Preparing the power supply 10
Installing the battery pack 10
Charging the battery pack 11
Connecting to a wall outlet 13
Step 2 Inserting a cassette 14

Recording – Basics

Recording a picture 15
Shooting backlit subjects – BACK LIGHT 20
Shooting in the dark – NightShot/ Super NightShot 21
Self-timer recording 22
END SEARCH 23

Playback – Basics

Playing back a tape 24
Viewing the recording on TV 27

Advanced Recording Operations

Recording a still image on a tape – Tape Photo recording 29
Adjusting the white balance manually .. 34
Using the wide mode 35
Using the fader function 36
Using special effects – Picture effect 38
Using special effects – Digital effect 39
Using the PROGRAM AE function 42
Adjusting the exposure manually 44
Focusing manually 45

Advanced Playback Operations

Playing back a tape with picture effects 47
Playing back a tape with digital effects 48
Enlarging images recorded on tapes – Tape PB ZOOM 49
Quickly locating a scene using the zero set memory function 50
Searching the boundaries of recorded tape by title – Title search 51
Searching a recording by date – Date search 52
Searching for a photo – Photo search/Photo scan 54

Editing

Dubbing a tape 56
Dubbing only desired scenes – Digital program editing 58
Using with analog video unit and personal computer – Signal convert function ... 68
Recording video or TV programs 69
Inserting a scene from a VCR – Insert editing 71
Audio dubbing 73
Superimposing a title 77
Making your own titles 80
Labeling a cassette 82

Customizing Your Camcorder

Changing the menu settings 84
Resetting the date and time 92

"Memory Stick" Operations

Using a "Memory Stick" – introduction 93
Recording still images on "Memory Stick"s – Memory Photo recording 102
Recording an image from a mini DV tape as a still image 108
Recording moving pictures on "Memory Stick"s – MPEG movie recording ... 111
Recording a picture from a mini DV tape as a moving picture 112
Superimposing a still image in a "Memory Stick" on a moving picture – MEMORY MIX 115
Copying still images from a mini DV tape – Photo save 118
Viewing a still image – Memory photo playback 120
Viewing a moving picture – MPEG movie playback 123
Viewing images using a personal computer 125
Copying the image recorded on "Memory Stick"s to mini DV tapes 130
Enlarging still images recorded on "Memory Stick"s – Memory PB ZOOM 132
Playing back images in a continuous loop – SLIDE SHOW 133
Preventing accidental erasure – Image protection 134
Deleting images 135
Writing a print mark – PRINT MARK ... 137

Additional Information

Usable cassettes 138
About i.LINK 140
Troubleshooting 142
Self-diagnosis display 148
Warning indicators and messages 149
Using your camcorder abroad 151
Maintenance information and precautions 152
Specifications 156

Quick Reference

Identifying the parts and controls 158
Quick Function Guide 166
Index 167

Checking supplied accessories

Make sure that the following accessories are supplied with your camcorder.

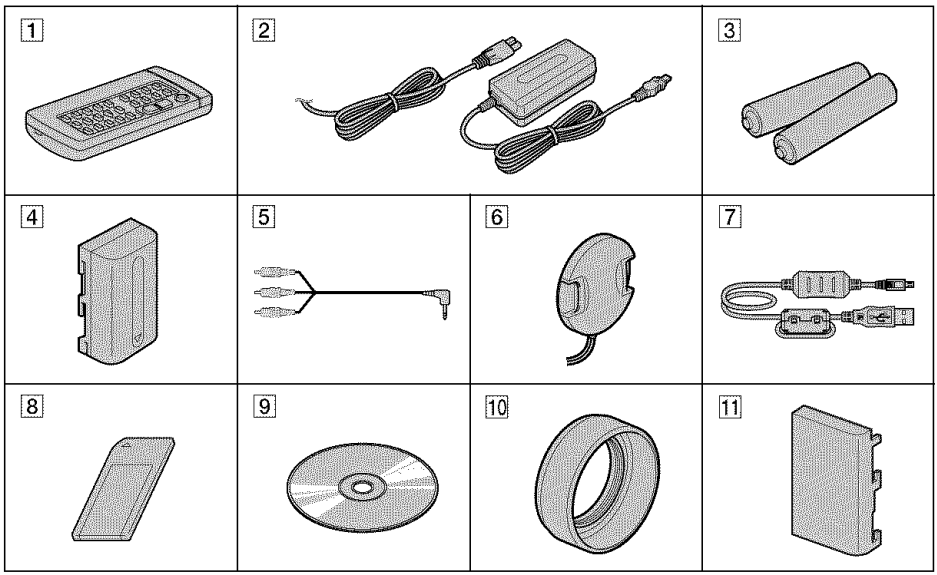

1 **Wireless Remote Commander** (1) (p. 164)

2 **AC-L10A/L10B/L10C AC power adaptor** (1), **Power cord** (1) (p. 11)

3 **Size AA (R6) battery for Remote Commander** (2) (p. 164)

4 **NP-FM50 battery pack** (1) (p. 10, 11)

5 **A/V connecting cable** (1) (p. 27, 56)

6 **Lens cap** (1) (p. 15)

7 **USB cable** (1) (p. 126)

8 **"Memory Stick"** (1) (p. 93)

9 **CD-ROM (SPVD-002 USB Driver)** (1) (p. 126)

10 **Lens hood** (1) (p. 18)

11 **Battery terminal cover** (1) (p. 10)

Contents of the recording cannot be compensated if recording or playback is not made due to a malfunction of the camcorder, storage media, etc.

Quick Start Guide

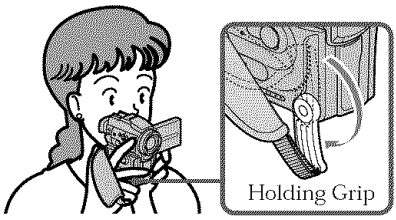

This chapter introduces you to the basic features of your camcorder. See the page in parentheses "( )" for more information.
Pull down the Holding Grip to hold your camcorder as illustrated.

1 Connecting the power cord (p. 13)

Use the battery pack when using your camcorder outdoors (p. 10).

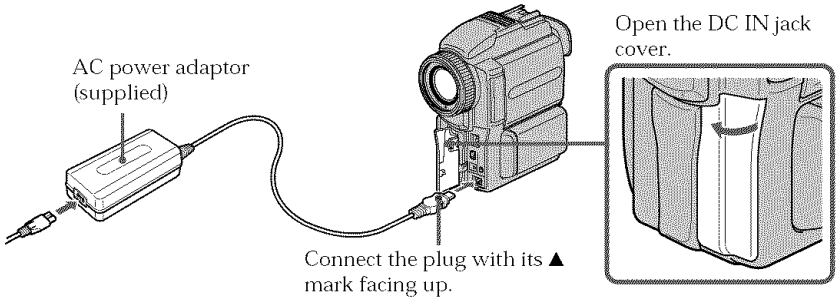

2 Inserting a cassette (p. 14)

❶ Slide OPEN/⏏ EJECT in the direction of the arrow and open the lid.

❷ Push the middle portion of the back of the cassette to insert. Insert the cassette in a straight line deeply into the cassette compartment with the window facing out.

❸ Close the cassette compartment by pressing the PUSH mark on the cassette compartment.
After the cassette compartment goes down completely, close the lid until it clicks.

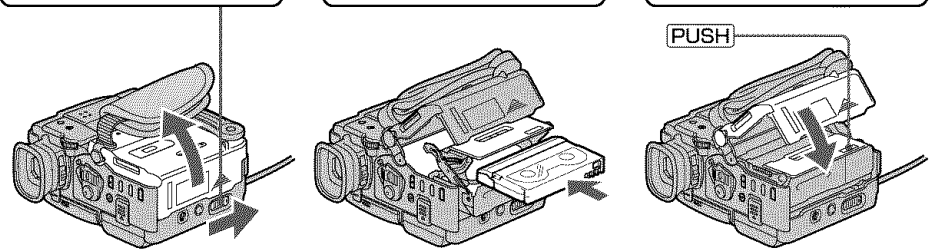

3 Recording a picture (p. 15)

1. Remove the lens cap.

Viewfinder
When the LCD panel is closed, use the viewfinder placing your eye against its eyecup.

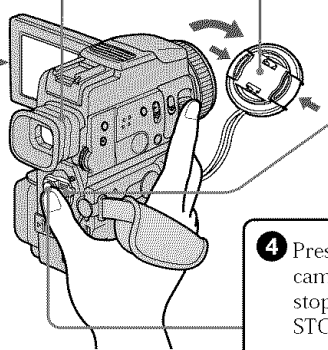

2. Set the POWER switch to CAMERA while pressing the small green button.

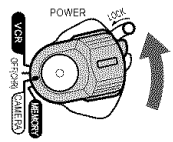

3. Press OPEN to open the LCD panel.
The picture appears on the LCD screen.

4. Press START/STOP. Your camcorder starts recording. To stop recording, press START/STOP again.

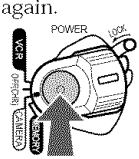

4 Monitoring the playback picture on the LCD screen (p. 24)

1. Set the POWER switch to VCR while pressing the small green button.

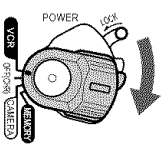

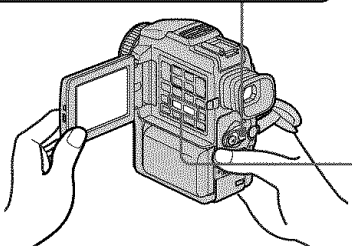

2. Press ◄◄ to rewind the tape.

3. Press ► to start playback.

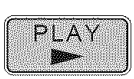

NOTE
Do not pick up your camcorder by holding the viewfinder, the flash, the LCD panel or the battery pack.

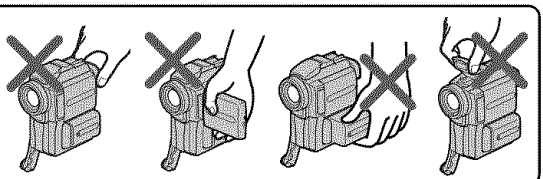

Using this manual

As you read through this manual, buttons and settings on your camcorder are shown in capital letters.
e.g. Set the POWER switch to CAMERA.
When you carry out an operation, you can hear a beep sound to indicate that the operation is being carried out.

Note on Cassette Memory

Your camcorder is based on the DV format. You can only use mini DV cassettes with your camcorder. We recommend that you use a tape with cassette memory CM.

The functions which require different operations depending on whether the tape has the cassette memory or not are:
- End search (p. 23, 26)
- Date search (p. 52)
- Photo search (p. 54).

The functions you can operate only with the cassette memory are:
- Title search (p. 51)
- Superimposing a title (p. 77)
- Making your own titles (p. 80)
- Labeling a cassette (p. 82).

For details, see page 138.

CM only You see this mark in the introduction of the features that are operated only with cassette memory.

Tapes with cassette memory are marked by CM (Cassette Memory).

Note on TV color systems

TV color systems differ from country to country. To view your recordings on a TV, you need an NTSC system-based TV.

Copyright precautions

Television programs, films, video tapes, and other materials may be copyrighted. Unauthorized recording of such materials may be contrary to the provision of the copyright laws.

Precautions on camcorder care

- **The LCD screen and the viewfinder are manufactured using high-precision technology. However, there may be some tiny black points and/or bright points (red, blue, green, or white) that constantly appear on the LCD screen and in the viewfinder. These points occur normally in the manufacturing process and do not affect the recorded picture in any way. Effective ratio of pixels and/or screen are 99.99% or more.**
- Do not let your camcorder get wet. Keep your camcorder away from rain and sea water. Letting your camcorder get wet may cause your camcorder to malfunction. Sometimes this malfunction cannot be repaired **[a]**.
- Never leave your camcorder exposed to temperatures above 140°F (60°C), such as in a car parked in the sun or under direct sunlight **[b]**.
- Do not place your camcorder so as to point the viewfinder, the LCD screen or lens toward the sun. The inside of the viewfinder, LCD screen or lens may be damaged **[c]**.

[a]

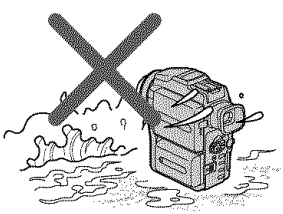

[b]

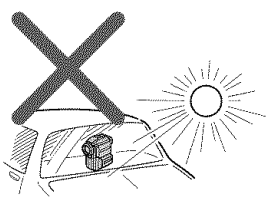

[c]

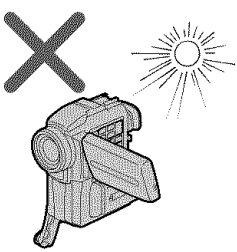

Step 1 Preparing the power supply

Installing the battery pack

Install the battery pack to use your camcorder outdoors.

(1) While sliding BATTERY RELEASE in the direction of the arrow ❶, slide the battery terminal cover in the direction of the arrow ❷.

(2) Insert the battery pack in the direction of the arrow.

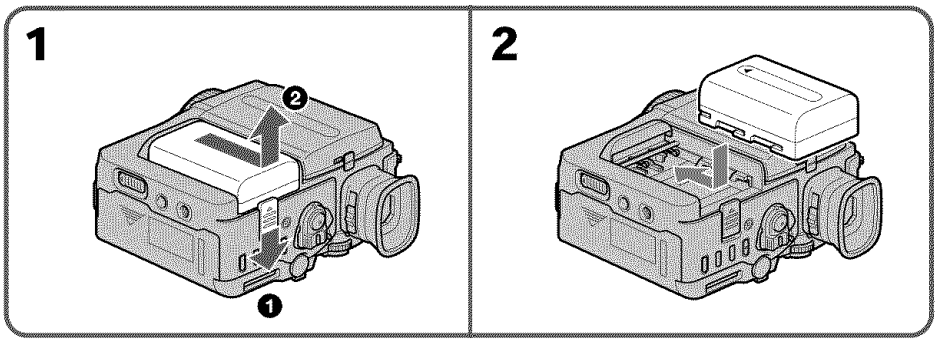

To remove the battery pack

The battery pack is removed in the same way as the battery terminal cover.

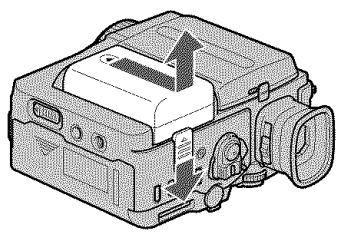

Note on the battery terminal cover

To protect the battery terminals, install the battery terminal cover after the battery pack is removed.

Charging the battery pack

Use the battery pack after charging it for your camcorder.
Your camcorder operates only with the "InfoLITHIUM" battery pack (M series).

(1) Open the DC IN jack cover and connect the AC power adaptor supplied with your camcorder to the DC IN jack with the plug's ▲ mark facing up.
(2) Connect the power cord to the AC power adaptor.
(3) Connect the power cord to a wall outlet.
(4) Set the POWER switch to OFF (CHG). The CHARGE lamp (orange) lights up. Charging begins.

When the CHARGE lamp goes out, **normal charge** is completed. For **full charge**, which allows you to use the battery longer than usual, leave the battery pack in place for approximately one hour after the CHARGE lamp goes out.

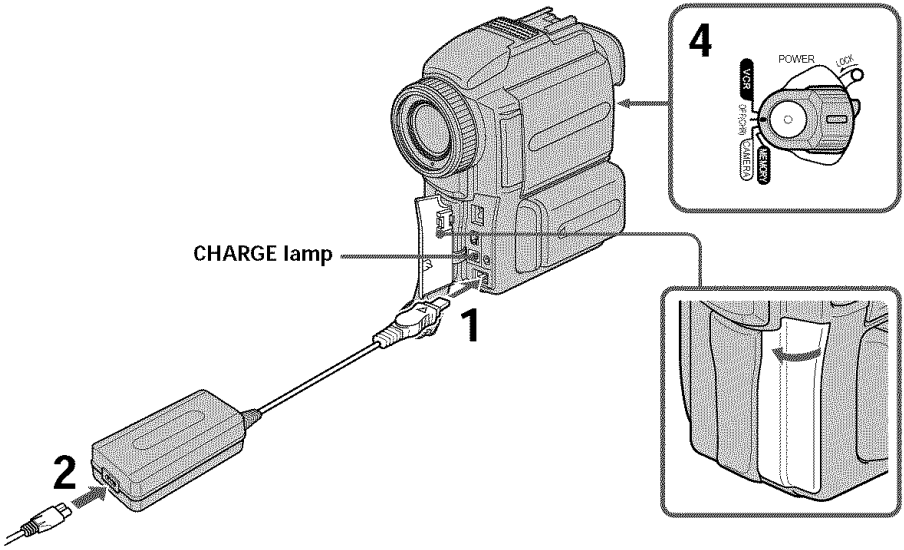

After charging the battery pack

Disconnect the AC power adaptor from the DC IN jack on your camcorder.

Notes

- Prevent metallic objects from coming into contact with the metal parts of the DC plug of the AC power adaptor. This may cause a short-circuit, damaging the AC power adaptor.
- Keep the battery pack dry.
- When the battery pack is not to be used for a long time, charge the battery pack once fully and then use it until it fully discharges again. Keep the battery pack in a cool place.

Charging time

Battery pack	Full charge (Normal charge)
NP-FM50 (supplied)	150 (90)
NP-FM70	240 (180)
NP-FM90	330 (270)
NP-FM91	360 (300)

Approximate minutes to charge an empty battery pack

Recording time

Battery pack	Recording with the viewfinder		Recording with the LCD screen	
	Continuous*	Typical**	Continuous*	Typical**
NP-FM50 (supplied)	135 (120)	80 (70)	115 (105)	65 (60)
NP-FM70	285 (255)	170 (150)	245 (220)	145 (130)
NP-FM90	435 (390)	260 (230)	370 (335)	220 (200)
NP-FM91	505 (455)	300 (270)	430 (390)	255 (230)

Approximate minutes when you use a fully charged battery

Numbers in parentheses "( )" indicate the time using a normally charged battery.

* Approximate continuous recording time at 77°F (25°C). The battery life will be shorter if you use your camcorder in a cold environment.

** Approximate number of minutes when recording while you repeat recording start/stop, zooming and turning the power on/off. The actual battery life may be shorter.

Playing time

Battery pack	Playing time on LCD screen	Playing time with LCD closed
NP-FM50 (supplied)	140 (125)	170 (155)
NP-FM70	295 (265)	355 (320)
NP-FM90	450 (400)	540 (485)
NP-FM91	520 (465)	625 (560)

Approximate minutes when you use a fully charged battery

Numbers in parentheses "( )" indicate the time using a normally charged battery. The battery life will be shorter if you use your camcorder in a cold environment.

What is "InfoLITHIUM"?

The "InfoLITHIUM" is a lithium ion battery pack which can exchange data such as battery consumption with compatible electronic equipment. This unit is compatible with the "InfoLITHIUM" battery pack (M series). Your camcorder operates only with the "InfoLITHIUM" battery. "InfoLITHIUM" M series battery packs have the InfoLITHIUM M SERIES mark.

"InfoLITHIUM" is a trademark of Sony Corporation.

If the power may go off although the battery remaining indicator indicates that the battery pack has enough power to operate

Charge the battery pack fully again so that the indication on the battery remaining indicator is correct.

Connecting to a wall outlet

When you use your camcorder for a long time, we recommend that you power it from a wall outlet using the AC power adaptor.

(1) Open the DC IN jack cover, pulling the cover out a little. Connect the AC power adaptor supplied with your camcorder to the DC IN jack on your camcorder with the plug's ▲ mark facing up.

(2) Connect the power cord to the AC power adaptor.

(3) Connect the power cord to a wall outlet.

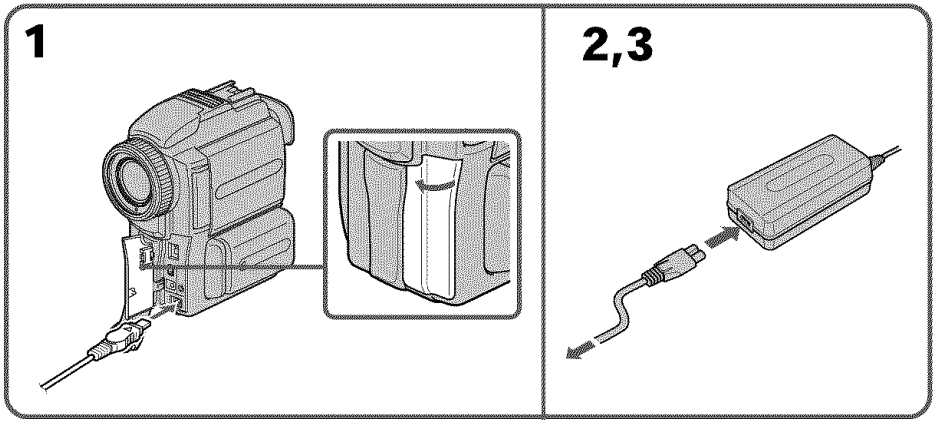

PRECAUTION

The set is not disconnected from the AC power source (house current) as long as it is connected to the wall outlet, even if the set itself has been turned off.

Notes

- The AC power adaptor can supply power even if the battery pack is attached to your camcorder.
- The DC IN jack has "source priority." This means that the battery pack cannot supply any power if the power cord is connected to the DC IN jack, even when the power cord is not plugged into a wall outlet.

Using a car battery

Use Sony DC Adaptor/Charger (not supplied).

Step 2 Inserting a cassette

(1) Install the power source.
(2) Slide OPEN/⏏EJECT in the direction of the arrow and open the lid.
The cassette compartment automatically lifts up and opens.
(3) Push the middle portion of the back of the cassette to insert.
Insert the cassette in a straight line deeply into the cassette compartment with the window facing out.
(4) Close the cassette compartment by pressing the PUSH mark on the cassette compartment. The cassette compartment automatically goes down.
(5) After the cassette compartment going down completely, close the lid until it clicks.

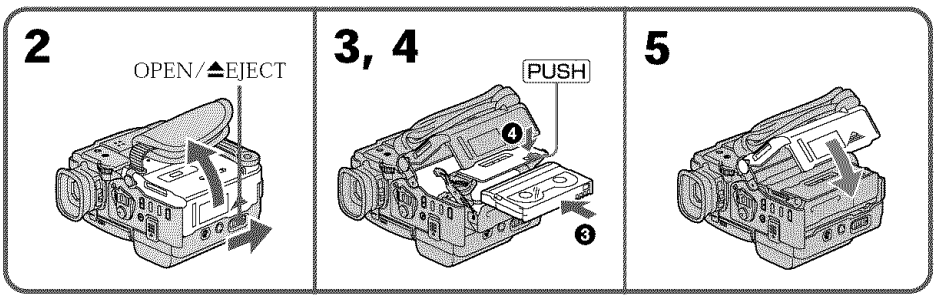

To eject a cassette

Follow the procedure above, and take out the cassette in step 3.

Notes

- Do not press the cassette compartment down forcibly. Doing so may cause malfunction.
- The cassette compartment may not be closed when you press any part of the lid other than the PUSH mark.

When you use mini DV cassette with cassette memory

Read the instruction about cassette memory to use this function properly (p. 138).

To prevent accidental erasure

Slide the write-protect tab on the cassette to expose the red mark.

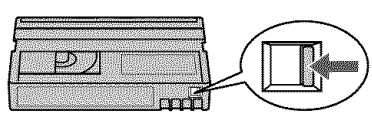

Recording a picture

Your camcorder automatically focuses for you.

(1) Remove the lens cap and pull the lens cap string to fix it.

(2) Install the power source and insert a cassette. See "Step 1" and "Step 2" for more information (p. 10 to p. 14).

(3) Pull down the Holding Grip.
Hold your camcorder firmly as illustrated.

(4) Set the POWER switch to CAMERA while pressing the small green button.
Your camcorder is set to the standby mode.

(5) Press OPEN to open the LCD panel.

(6) Press START/STOP. Your camcorder starts recording. The REC indicator appears. The camera recording lamp located on the front of your camcorder lights up. To stop recording, press START/STOP again.

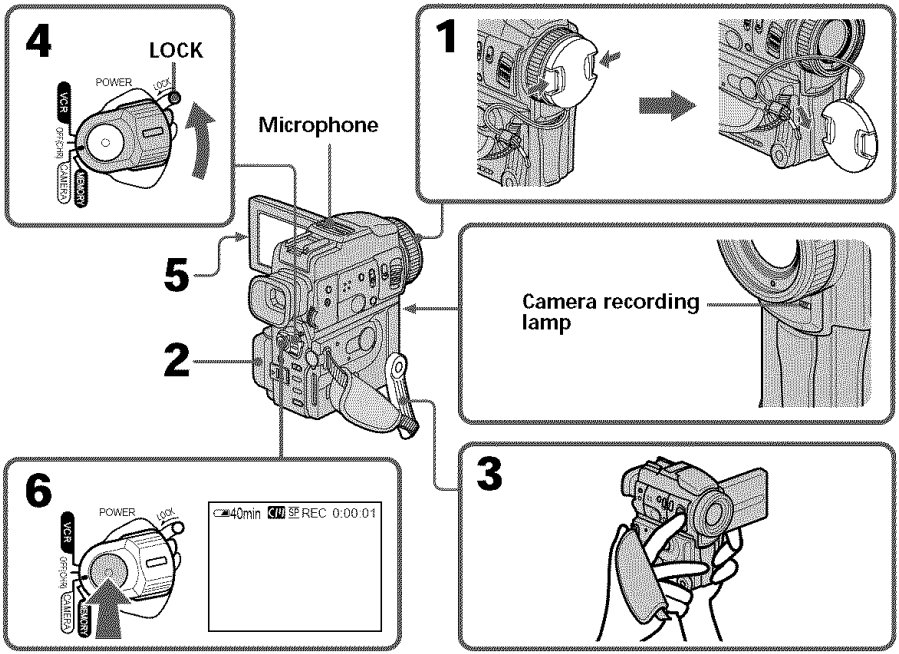

Notes

- Fasten the grip strap firmly.
- Do not touch the built-in microphone during recording

Note on Recording mode

Your camcorder records and plays back in the SP (standard play) mode and in the LP (long play) mode. Select SP or LP in the menu settings. In the LP mode, you can record 1.5 times as long as in the SP mode.
When you record a tape in the LP mode on your camcorder, we recommend playing the tape on your camcorder.

Note on the LOCK switch

When you slide the LOCK switch to the left, the POWER switch can no longer be set to MEMORY accidentally. LOCK switch is set to the right as a default setting.

To enable smooth transition

Transition between the last scene you recorded and the next scene is smooth as long as you do not eject the cassette even if you turn off your camcorder.
However, check the following:
- Do not mix recordings in the SP mode and ones in the LP mode on one tape.
- When you change the battery pack, set the POWER switch to OFF (CHG).
- When you use a tape with cassette memory, however, you can make the transition smooth even after ejecting the cassette if you use the END SEARCH function (p. 23).

If you leave your camcorder in the standby mode for 5 minutes while the cassette is inserted

Your camcorder automatically turns off. This is to save battery power and to prevent battery and tape wear. To resume the standby mode, set the POWER switch to OFF (CHG), and to CAMERA again.

When you record in the SP and LP modes on one tape or you record some scenes in the LP mode

The playback picture may be distorted or the time code may not be written properly between scenes.

Recording date and time

The recording date and time are not displayed while recording. However, they are recorded automatically onto the tape. To display the recording date and time, press DATA CODE on the Remote Commander during playback.

After recording

(1) Set the POWER switch to OFF (CHG).
(2) Close the LCD panel.
(3) Set the Holding Grip back to the original position.
(4) Eject the cassette.
(5) Remove the battery pack.
(6) Attach the battery terminal cover.

Adjusting the LCD screen

The LCD panel moves about 90 degrees to the viewfinder side and about 180 degrees to the lens side.
If you turn the LCD panel over so that it faces the other way, the ☺ indicator appears on the LCD screen and in the viewfinder **(Mirror mode)**.

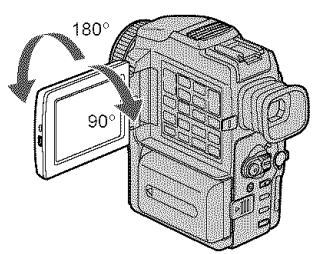

When closing the LCD panel, set it vertically, and swing it into the camcorder body.

Note
When using the LCD screen except in the mirror mode, the viewfinder automatically turns off.

When you use the LCD screen outdoors in direct sunlight
The LCD screen may be difficult to see. If this happens, we recommend that you use the viewfinder.

When you adjust angles of the LCD panel
Make sure if the LCD panel is opened up to 90 degrees.

Picture in the mirror mode
The picture on the LCD screen is a mirror-image. However, the picture will be normal when recorded.

During recording in the mirror mode
ZERO SET MEMORY on the Remote Commander does not work.

Indicators in the mirror mode
The STBY indicator appears as ❚❚● and REC as ●. Some of the other indicators appear mirror-reversed and others are not displayed.

When recording with the LCD panel opened
Recording time becomes shorter a little compared with when recording with the LCD panel closed.

LCD screen backlight
You can adjust the brightness of the backlight. Select LCD B.L. in the menu settings (p. 84).

Even if you adjust the LCD screen backlight or brightness of the LCD screen
The recorded picture will not be affected.

Adjusting the viewfinder

If you record pictures with the LCD panel closed, check the picture with the viewfinder. Adjust the viewfinder lens to your eyesight so that the indicators in the viewfinder come into sharp focus.

Move the viewfinder lens adjustment lever.

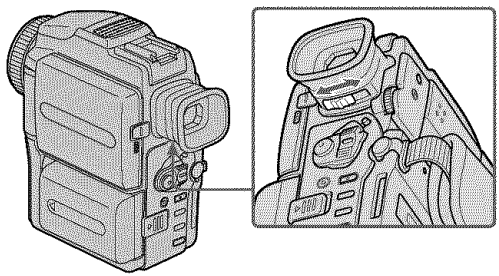

Attaching the supplied lens hood

To record fine pictures under strong light, we recommend attaching the lens hood. Also the lens cap can be attached even with the lens hood on.

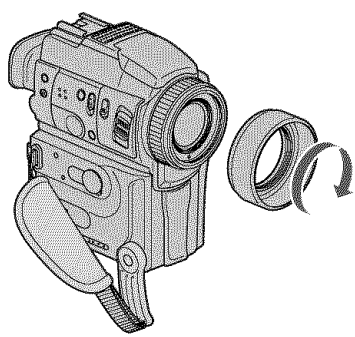

Notes

- When you use the Remote Commander and the lens hood, the Remote Commander may not function properly because the lens hood blocks the infrared rays from the Remote Commander. In such case, remove the lens hood from your camcorder.
- You cannot attach filters or other objects onto the lens hood.

When you use the filter (not supplied)

The shadow of the lens hood may appear in the corners of LCD screen or viewfinder.

Using the zoom feature

Move the power zoom lever a little for a slower zoom. Move it further for a faster zoom. Using the zoom function sparingly results in better-looking recordings.
"T" side: for telephoto (subject appears closer)
"W" side: for wide-angle (subject appears farther away)

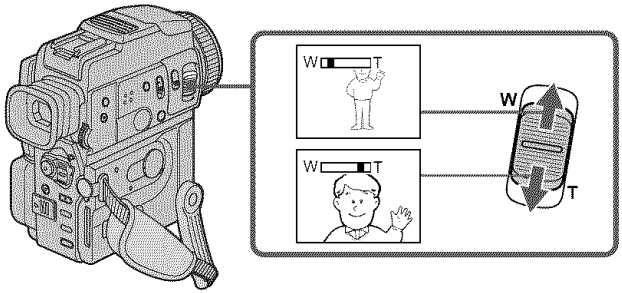

To use zoom greater than 10×

Zoom greater than 10× is performed digitally, if you set D ZOOM to 20× or 120× in the menu settings. The digital zoom function is set to OFF as a default setting (p. 84).

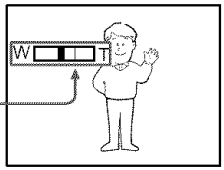

The right side of the bar shows the digital zooming zone.
The digital zooming zone appears when you set D ZOOM to 20× or 120×.

When you shoot close to a subject

If you cannot get a sharp focus, move the power zoom lever to the "W" side until the focus is sharp. You can shoot a subject that is at least about 2 feet 5/8 inch (about 80 cm) away from the lens surface in the telephoto position, or about 1/2 inch (about 1 cm) away in the wide-angle position.

Notes on digital zoom

- Digital zoom starts to function when zoom exceeds 10×.
- The picture quality deteriorates as you move the power zoom lever toward the "T" side.
- You cannot use the digital zoom when the POWER switch is set to MEMORY.

Indicators displayed in the recording mode

The indicators are not recorded on tapes.

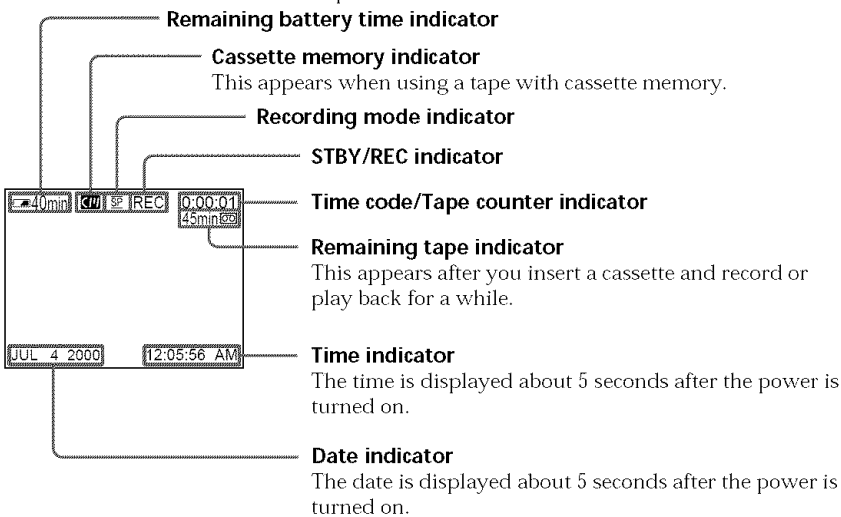

Remaining battery time indicator
The remaining battery time indicator roughly indicates the recording time. The indicator may not be correct, depending on the conditions in which you are recording. When you close the LCD panel and open it again, it takes about one minute for the correct remaining battery time in minutes to be displayed.

Time code
The time code indicates the recording or playback time, "0:00:00" (hours : minutes : seconds) in CAMERA mode and "0:00:00:00" (hours : minutes : seconds : frames) in VCR mode. You cannot rewrite only the time code.

Remaining tape indicator
The indicator may not be displayed accurately depending on the tape.

Shooting backlit subjects – BACK LIGHT

When you shoot a subject with the light source behind the subject or a subject with a light background, use the backlight function.

In CAMERA or MEMORY mode, press BACK LIGHT.
The ◪ indicator appears in the viewfinder or on the LCD screen.
To cancel, press BACK LIGHT again.

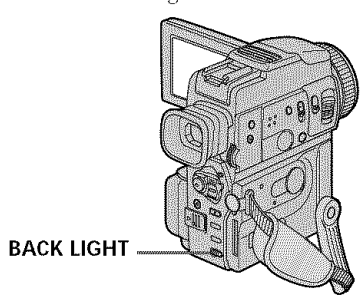

If you press EXPOSURE when shooting backlit subjects
The backlight function will be canceled.

Shooting in the dark – NightShot/Super NightShot

The NightShot function enables you to shoot a subject in a dark place. For example, you can satisfactorily record the environment of nocturnal animals for observation when you use this function.

In CAMERA or MEMORY mode, slide NIGHTSHOT to ON.
◉ and "NIGHTSHOT" indicators flash on the LCD screen or in the viewfinder. To cancel the NightShot function, slide NIGHTSHOT to OFF.

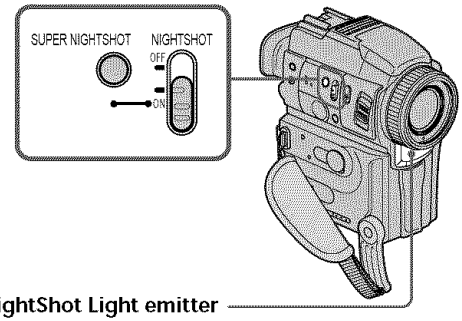

Using Super NightShot

The Super NightShot mode makes subjects more than 16 times brighter than those recorded in the NightShot mode

(1) Slide NIGHTSHOT to ON in CAMERA mode. ◉ and "NIGHTSHOT" indicators flash on the LCD screen or in the viewfinder.
(2) Press SUPER NIGHTSHOT. S◉ and "SUPER NIGHTSHOT" indicators flash on the LCD screen or in the viewfinder.
To cancel the Super NightShot mode, press SUPER NIGHTSHOT again.

Using the NightShot Light

The picture will be clearer with the NightShot Light on. To enable NightShot Light, set N.S. LIGHT to ON in the menu settings (p. 84).

Notes

- Do not use the NightShot function in bright places (ex. the outdoors in the daytime). This may cause your camcorder to malfunction.
- When you keep NIGHTSHOT set to ON in normal recording, the picture may be recorded in incorrect or unnatural colors.
- If focusing is difficult with the autofocus mode when using the NightShot function, focus manually.
- Do not cover the NightShot Light emitter when using the NightShot function.
- Detach the lens hood when you shoot with the NightShot Light since the lens hood may block the NightShot Light.

While using the NightShot function, you cannot use the following functions:
– Exposure
– PROGRAM AE
– White balance

While using the Super NightShot function
The shutter speed is automatically adjusted depending on the brightness. At that time, the moving picture may be slow down.

While using the Super NightShot function, you cannot use the following functions:
- Fader
- Digital effect
- PROGRAM AE
- Exposure
- White balance
- Recording with the flash

In MEMORY mode
You cannot use the Super NightShot function.

NightShot Light
NightShot Light rays are infrared and so are invisible. The maximum shooting distance using the NightShot Light is about 10 feet (3 m).

Self-timer recording

Recording with the self-timer starts in 10 seconds automatically. This mode is useful when you want to record yourself. You can also use the Remote Commander for this operation.

(1) Press ⏲ (self-timer) in the standby mode. The ⏲ (self-timer) indicator appears on the LCD screen or in the viewfinder.
(2) Press START/STOP.
Self-timer starts counting down from 10 with a beep sound. In the last 2 seconds of the countdown, the beep sound gets faster, then recording starts automatically.

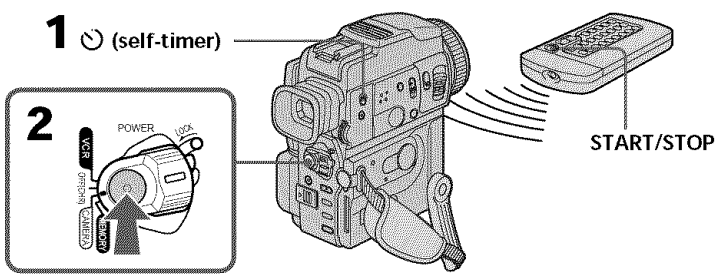

To stop the self-timer before recording
Press START/STOP again.
Use the Remote Commander for convenience.

To record still images on tapes using the self-timer
Press PHOTO in step 2 (p. 32).

To cancel self-timer recording
Press ⏲ (self-timer) so that the ⏲ indicator disappears from on the LCD screen or in the viewfinder while your camcorder is in the standby mode.

Note
The self-timer recording mode is automatically canceled when:
- Self-timer recording is finished.
- The POWER switch is set to OFF (CHG) or VCR.

Self-timer memory photo recording
You can also record still images on "Memory Stick"s with the self-timer. (p. 107)

END SEARCH

You can go to the end of the recorded portion after you record.

In the standby mode, press END SEARCH.
The last 5 seconds of the recorded portion are played back and your camcorder returns to the standby mode. You can monitor the sound from the speaker or headphones.

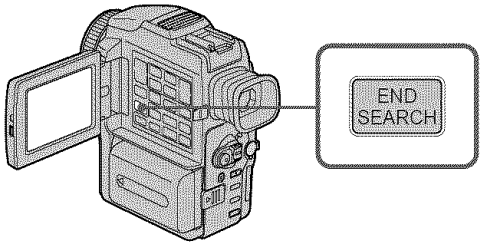

To stop searching

Press END SEARCH again.

If you use a tape without cassette memory

The end search function does not work once you eject the cassette after you have recorded on the tape. If you use a tape with cassette memory, the end search function works even once you eject the cassette.
If there is a blank portion at the beginning or between the recorded portions, the end search function may not work correctly (p. 138).

Playing back a tape

You can monitor the playback picture on the LCD screen. If you close the LCD panel, you can monitor the playback picture in the viewfinder. You can control playback using the Remote Commander supplied with your camcorder.

(1) Install the power source and insert the recorded tape.
(2) Set the POWER switch to VCR while pressing the small green button.
(3) Open the LCD panel while pressing OPEN.
(4) Press ◀◀ to rewind the tape.
(5) Press ▶ to start playback.
(6) To adjust the volume, press either of the two buttons on VOLUME.

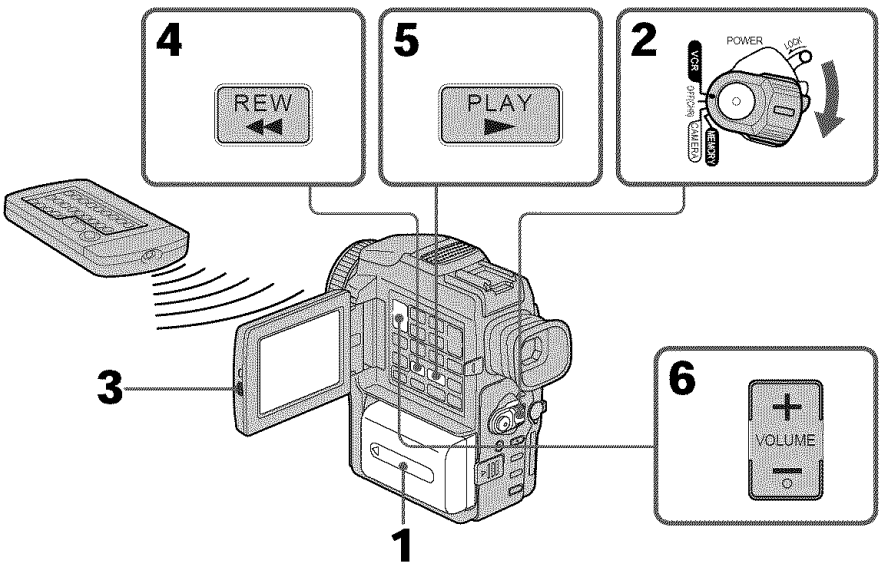

To stop playback

Press ■.

When monitoring on the LCD screen

You can turn the LCD panel over and move it back to the camcorder body with the LCD screen facing out.

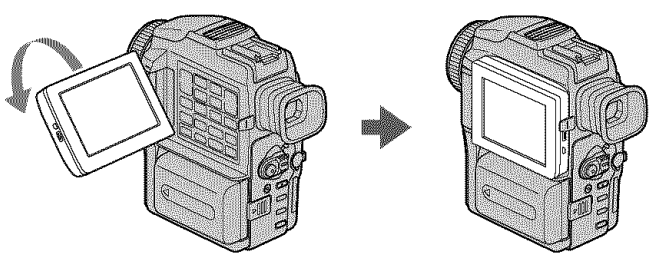

If you leave the power on for a long time

Your camcorder becomes warm. This is not a malfunction.

When you open or close the LCD panel

Make sure that the LCD panel is set vertically.

To display the screen indicators – Display function

Press DISPLAY on your camcorder or the Remote Commander supplied with your camcorder. The indicators appear on the LCD screen. To make the indicators disappear, press DISPLAY again.

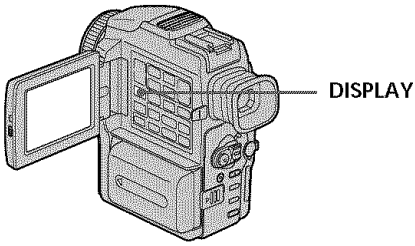

Using the data code function

Your camcorder automatically records not only images on the tape but also the recording data (date/time or various settings when recorded) **(Data code)**. Use the Remote Commander for this operation.

Press DATA CODE on the Remote Commander in the playback mode.
The display changes as follows:
date/time → various settings (SteadyShot, exposure, white balance, gain, shutter speed, aperture value mode) → no indicator

Date/time

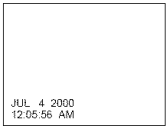

Various settings

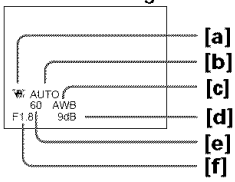

[a] SteadyShot off indicator
[b] Exposure mode indicator
[c] White balance indicator
[d] Gain indicator
[e] Shutter speed indicator
[f] Aperture value

Not to display various settings
Set DATA CODE to DATE in the menu settings (p. 84).
The display changes as follows: date/time ←→ no indicator

Recording data
Recording data is your camcorder's information when you have recorded. In the recording mode, the recording data will not be displayed.

When you use the data code function, bars (-- -- --) appear if:
– A blank portion of the tape is being played back.
– The tape is unreadable due to tape damage or noise.
– The tape was recorded by a camcorder without the date and time set.

Data code
When you connect your camcorder to the TV, the data code appears on the TV screen.

Various playback modes

To operate video control buttons, set the POWER switch to VCR.

To view a still picture (playback pause)

Press ❚❚ during playback. To resume normal playback, press ► or ❚❚.

To advance the tape

Press ►► in the stop mode. To resume normal playback, press ►.

To rewind the tape

Press ◄◄ in the stop mode. To resume normal playback, press ►.

To change the playback direction

Press < on the Remote Commander during playback to reverse the playback direction. To resume normal playback, press ►.

To locate a scene monitoring the picture (picture search)

Keep pressing ◄◄ or ►► during playback. To resume normal playback, release the button.

To monitor the high-speed picture while advancing or rewinding the tape (skip scan)

Keep pressing ◄◄ while rewinding or ►► while advancing the tape. To resume rewinding or advancing, release the button.

To view the picture at slow speed (slow playback)

Press ❚► on the Remote Commander during playback. For slow playback in the reverse direction, press < , then press ❚► on the Remote Commander. To resume normal playback, press ►.

To view the picture at double speed

Press ×2 on the Remote Commander during playback. For double speed playback in the reverse direction, press < , then press ×2 on the Remote Commander. To resume normal playback, press ►.

To view the picture frame-by-frame

Press ❚❚► on the Remote Commander in the playback pause mode. For frame-by-frame playback in the reverse direction, press ◄❚❚. To resume normal playback, press ►.

To search the last scene recorded (END SEARCH)

Press END SEARCH in the stop mode. The last 5 seconds of the recorded portion plays back and stops.

In the various playback modes

- Sound is muted.
- The previous picture may remain as a mosaic image during playback.

When the playback pause mode lasts for 5 minutes

Your camcorder automatically enters the stop mode. To resume playback, press ►.

Slow playback

The slow playback can be performed smoothly on your camcorder: however, this function does not work for an output signal through the DV IN/OUT jack.

When you play back a tape in reverse

Horizontal noise may appear at the center, or the top and bottom of the screen. This is not a malfunction.

Viewing the recording on TV

Connect your camcorder to your TV with the A/V connecting cable supplied with your camcorder to watch the playback picture on the TV screen. You can operate the video control buttons in the same way as when you monitor playback pictures on the LCD screen. When monitoring the playback picture on the TV screen, we recommend that you power your camcorder from a wall outlet using the AC power adaptor (p. 13). Refer to the operating instructions of your TV.

Open the jack cover. Connect your camcorder to the TV using the A/V connecting cable supplied with your camcorder. Then, set the TV/VCR selector on the TV to VCR.

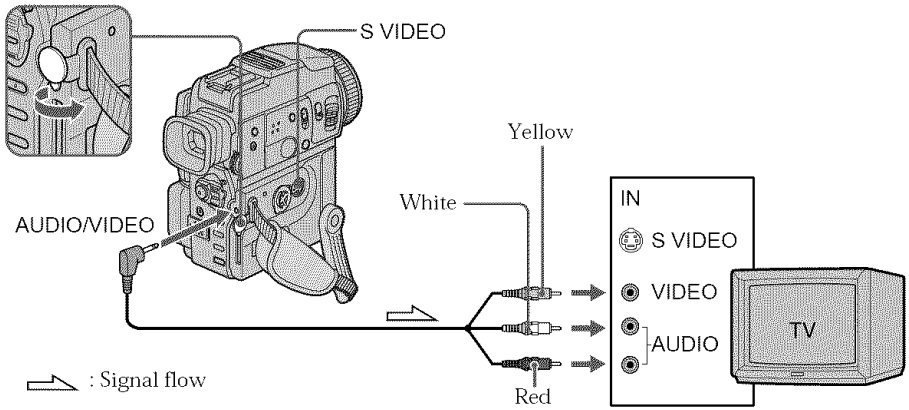

If your TV is already connected to a VCR

Connect your camcorder to the LINE IN input on the VCR by using the A/V connecting cable supplied with your camcorder. Set the input selector on the VCR to LINE.

If your TV or VCR is a monaural type

Connect the yellow plug of the A/V connecting cable to the video input jack and the white or the red plug to the audio input jack on the VCR or the TV. If you connect the white plug, the sound is L (left) signal. If you connect the red plug, the sound is R (right) signal.

If your TV has an S video jack

Connect using an S video cable (not supplied) to obtain high-quality pictures. With this connection, you do not need to connect the yellow (video) plug of the A/V connecting cable.
Connect the S video cable (not supplied) to the S video jacks on both your camcorder and the TV.
This connection produces higher quality DV format pictures.

To display the screen indicators on TV

Set DISPLAY to V-OUT/LCD in the menu settings (p. 84).
Then press DISPLAY on your camcorder. To turn off the screen indicators, press DISPLAY on your camcorder again.

Using the AV cordless IR receiver

Once you connect the AV cordless IR receiver (not supplied) to your TV or VCR, you can easily view the picture on your TV. For details, refer to the operating instructions of the AV cordless IR receiver.

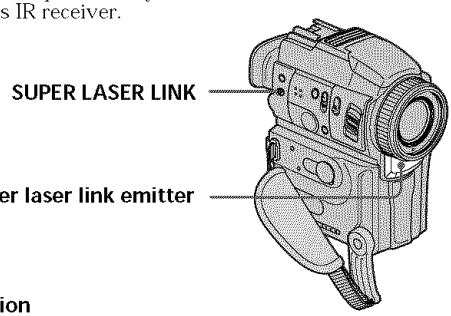

Before operation
Attach the power supply such as the AC power adaptor to your camcorder, and insert the recorded tape.

(1) After connecting your TV and AV cordless IR receiver, set the POWER switch on the AV cordless IR receiver to ON.
(2) Turn the TV on and set the TV/VCR selector on the TV to VCR.
(3) Set the POWER switch to VCR.
(4) Press SUPER LASER LINK. The lamp of SUPER LASER LINK lights up.
(5) Press ► on your camcorder to start playback.
(6) Point the super laser link emitter at the AV cordless IR receiver. Adjust the position of your camcorder and the AV cordless IR receiver to obtain clear playback pictures.

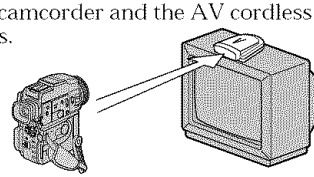

To cancel the super laser link function

Press SUPER LASER LINK again. The lamp on the SUPER LASER LINK button goes out.

If you use a Sony TV
- You can turn on the TV automatically when you press SUPER LASER LINK. To do so, make sure you:
  - Turn the TV's main switch on.
  - Set AUTO TV ON to ON in the menu settings.
  - Point the super laser link emitter at the TV's remote sensor.
- You can switch the video input of the TV automatically to the one which the AV cordless IR receiver is connected. To do so, set AUTO TV ON to ON and TV INPUT to the same video input (1, 2, 3) in the menu settings. With some models, however, the picture and sound may be disconnected momentarily when the video input is switched.
- The above feature may not work on some TV models.

If you turn the power off
The super laser link function turns off automatically.

When the super laser link is activated (the SUPER LASER LINK button is lit)
- Your camcorder consumes power. Press SUPER LASER LINK to turn off the laser link function when it is not needed.
- When you attach the lens hood, the lens hood may block infrared rays depending on the positions of the camcorder and the IR receiver. In this case, detach the lens hood.

SUPER LASER LINK is a trademark of Sony Corporation.

Recording a still image on a tape - Tape Photo recording

You can record an still image, for example, a photograph or drawing. This mode is useful when you want to print a image using a video printer (not supplied).
You can record about 510 images in the SP mode and about 765 images in the LP mode on a 60-minute tape.
Besides the operation described here, your camcorder can record still images on "Memory Stick"s (p. 102).

(1) In the standby mode, keep pressing PHOTO lightly until a still image appears.
The CAPTURE indicator appears. Recording does not start yet.
To change the still image, release PHOTO, select a still image again, and then press and hold PHOTO lightly.

(2) Press PHOTO deeper.
The still image on the LCD screen or in the viewfinder is recorded for about 7 seconds. The sound during those 7 seconds is also recorded.
The still image is displayed on the LCD screen or in the viewfinder until recording is completed.

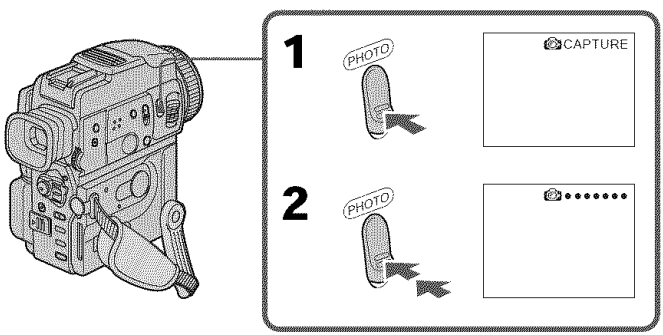

Notes

- During tape photo recording, you cannot change the mode or setting.
- When recording a still image, do not shake your camcorder. The image may fluctuate.
- You cannot use PHOTO during following operations:
  - Fader
  - Digital effect

If you record a moving subject with tape photo recording function
When you play back the still image on other equipment, the image may fluctuate.

To use the tape photo recording function using the Remote Commander
Press PHOTO on the Remote Commander. Your camcorder records an image on the LCD screen or in the viewfinder immediately.

To use the tape photo recording function during normal CAMERA recording
You cannot check an image on the LCD screen or in the viewfinder by pressing PHOTO lightly. Press PHOTO deeper. The still image is then recorded for about 7 seconds, and your camcorder returns to the standby mode.

To record clear and less fluctuated still images
We recommend that you record on "Memory Stick"s.

Recording images with the flash

The flash pops up automatically. The default setting is auto (no indicator). To change the flash mode, press the ϟ (flash) repeatedly until the flash mode indicator appears on the LCD screen or in the viewfinder.

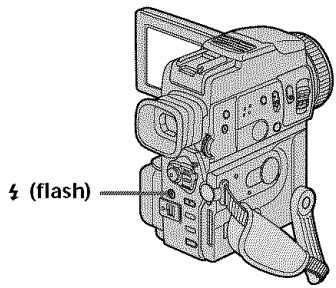

Each press of ϟ (flash) changes the indicator as follows:

(No indicator) → ◉ → ϟ → ⊛ → (No indicator)

◉ Auto red-eye reduction:	The flash fires before recording to reduce the red-eye phenomenon.
ϟ Forced flash:	The flash fires regardless of the surrounding brightness.
⊛ No flash:	The flash does not fire.

The flash is adjusted to the appropriate brightness through the photocell window for the flash. You can also change FLASH LVL to the desired brightness in the menu settings (p. 84). Try recording various images to find the most appropriate setting for FLASH LVL.

Notes

- Attaching a conversion lens (not supplied) may block the light from the flash or cause lens shadow to appear.
- You cannot use an external flash (not supplied) and the built-in flash at the same time.
- 👁 (Auto red-eye reduction) may not produce the desired effect depending on individual differences, the distance to the subject, the subject not looking at the pre-recording flash or other conditions.
- The flash effect cannot be obtained easily when you use forced flash in a bright location.
- When you record images with the flash, sound may not be recorded clearly.
- When recording with the flash, it takes longer to prepare for image capture. This is because your camcorder starts to charge power for firing after the flash pops up. Darken the surroundings by covering the lens part, and press PHOTO lightly so that your camcorder starts to charge power after the flash pops up.
- If it is not easy to focus on the subject automatically, for example, when recording in the dark, use the focal distance information (p. 46) for focusing manually.

When you record images with the flash

The possible shooting distance using the built-in flash is shorter than when you record on "Memory Stick"s.

When playing back images recorded with the flash on other camcorders

These images may flicker.

If you leave your camcorder for 5 or more minutes after disconnecting the power source

Your camcorder returns to the default setting (auto).

You cannot shoot images with the flash during the following operations:

- Low lux mode of PROGRAM AE
- Super Nightshot
- Digital effect
- Fader
- Recording

The flash does not fire even if you select auto and 👁 (auto red-eye reduction) during the following operations:

- NightShot
- Exposure
- Spotlight mode of PROGRAM AE
- Sunset & moon mode of PROGRAM AE
- Landscape mode of PROGRAM AE

When you use an external flash (not supplied) which does not have the auto red-eye reduction function

You cannot select the auto red-eye reduction.

Self-timer recording

You can record still images on tapes with the self-timer. This mode is useful when you want to record yourself. You can also use the Remote Commander for this operation.

(1) Press ⏲ (self-timer) in the standby mode. The ⏲ (self-timer) indicator appears on the LCD screen or in the viewfinder.

(2) Press PHOTO firmly.
Self-timer starts counting down from 10 with a beep sound. In the last 2 seconds of the countdown, the beep sound gets faster, then recording starts automatically.

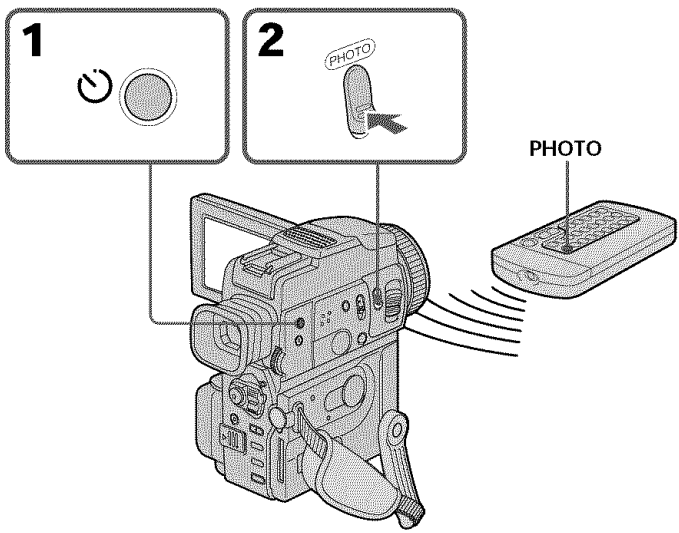

To cancel self-timer recording

Press ⏲ (self-timer) so that the ⏲ indicator disappears from the LCD screen or in the viewfinder while your camcorder is in the standby mode. You cannot cancel the self-timer recording using the Remote Commander.

Note

The self-timer recording mode is automatically canceled when:
– Self-timer recording is finished.
– The POWER switch is set to OFF (CHG) or VCR.

Printing the still image

You can print a still image by using the video printer (not supplied). Connect the video printer using the A/V connecting cable supplied with your camcorder.
Connect it to the AUDIO/VIDEO jack and connect the yellow plug of the cable to the video input of the video printer. Refer to the operating instructions of the video printer as well.

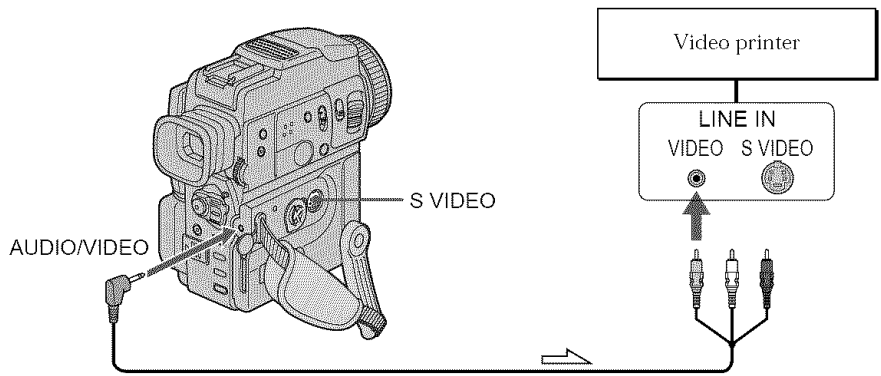

: Signal flow

If the video printer is equipped with S video input
Use the S video connecting cable (not supplied) to obtain high-quality output. Connect it to the S VIDEO jack and the S video input of the video printer.

Adjusting the white balance manually

You can manually adjust and set the white balance. This adjustment makes white subjects look white and allows more natural color balance. Normally white balance is automatically adjusted.

In CAMERA or MEMORY mode, select a desired WHT BAL in [M] in the menu settings (p. 84).

(INDOOR) :
- Lighting condition changes quickly
- Too bright place such as photography studios
- Under sodium lamps or mercury lamps

(OUTDOOR) :
- Recording a sunset/sunrise, just after sunset, just before sunrise, neon signs, or fireworks
- Under a color matching fluorescent lamp

HOLD :
Recording a single-colored subject or background

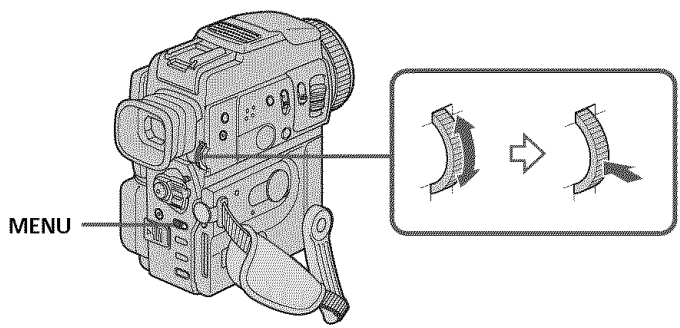

To return to the automatic white balance mode

Set WHT BAL to AUTO in the menu settings.

If the picture is being taken in a studio lit by TV lighting

We recommend that you record in the indoor mode.

When you record under fluorescent lighting

Use the automatic white balance or hold mode.
Your camcorder may not adjust the white balance correctly in the indoor mode.

In the automatic white balance mode

Point your camcorder at a white subject for about 10 seconds after setting the POWER switch to CAMERA to get a better adjustment when:
- You detach the battery for replacement.
- You bring your camcorder to the outdoors from the interior of a house holding the exposure, or vice versa.

In the hold white balance mode

Set the white balance to AUTO and reset to HOLD after a few seconds when:
- You change the PROGRAM AE mode.
- You bring your camcorder to the outdoors from the interior of a house, or vice versa.

Using the wide mode

You can record a 16:9 wide picture to watch on the 16:9 wide-screen TV (16:9WIDE). Black bands appear on the screen during recording in 16:9WIDE mode **[a].** The picture during a playback on a normal TV **[b]** or on a wide-screen TV **[c]** is compressed in the widthwise direction. If you set the screen mode of the wide-screen TV to the full mode, you can watch pictures of normal images **[d].**

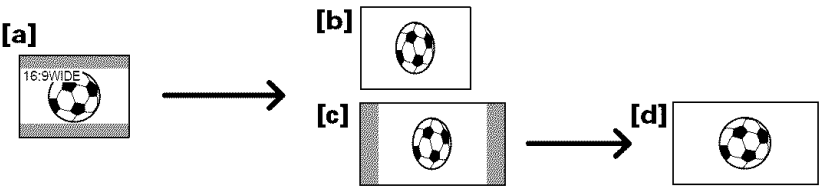

In the standby mode, set 16:9WIDE to ON in [C] in the menu settings (p. 84).

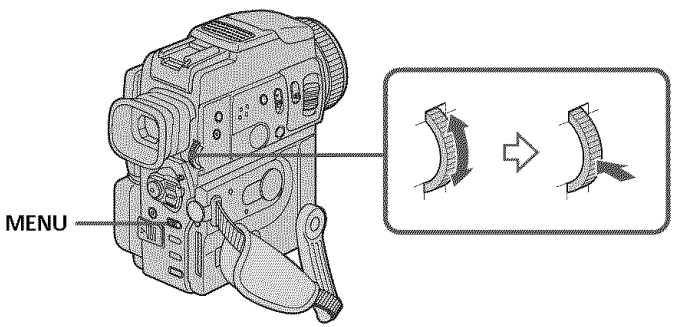

To cancel the wide mode

Set 16:9WIDE to OFF in the menu settings.

In the wide mode

You cannot select the OLD MOVIE function.

During recording

You cannot select or cancel the wide mode. When you cancel the wide mode, set your camcorder to the standby mode and then set 16:9WIDE to OFF in the menu settings.

Connection for a TV

Pictures recorded in the 16:9WIDE mode automatically appear on the TV screen at full size when:

- you connect your camcorder to a TV that is compatible with the video ID (ID-1/ID-2) system.
- you connect your camcorder to the S video jack on the TV.

ID-1 system

The ID-1 system sends aspect ratio information (16:9, 4:3, or letter box) with video signals. If you connect a TV compatible with the ID-1 system, the screen size is automatically selected.

ID-2 system

The ID-2 system sends a copyright protection signal with ID-1 signals inserted between video signals when you connect your camcorder to other equipment using an A/V connecting cable.

Using the fader function

You can fade in or out to give your recording a professional appearance.

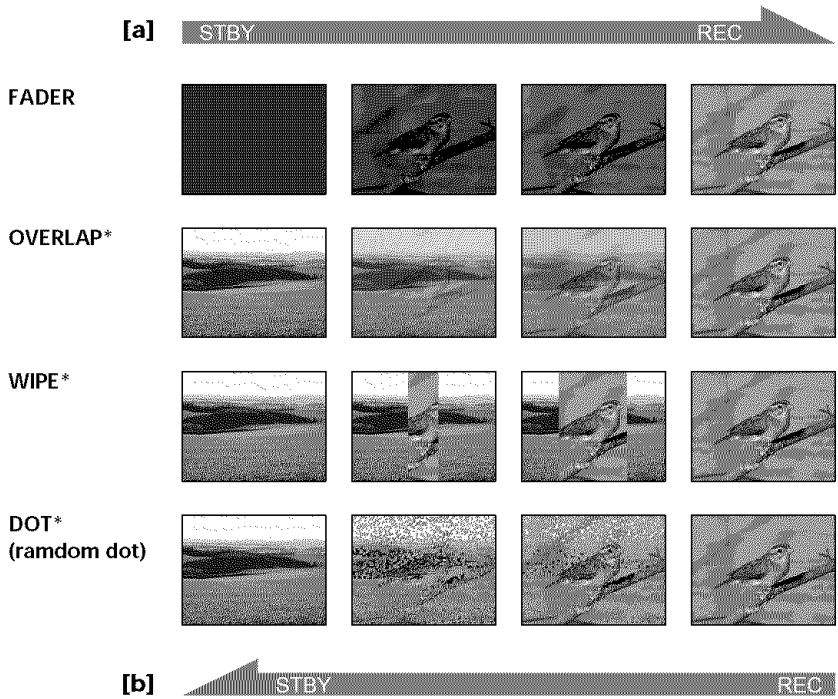

MONOTONE
When fading in, the picture gradually changes from black-and-white to color.
When fading out the picture gradually changes from color to black-and-white.

* Fade in only

(1) When fading in [a]
In the standby mode, press FADER until the desired fader indicator flashes.
When fading out [b]
In the recording mode, press FADER until the desired fader indicator flashes.
The indicator changes as follows:
FADER → MONOTONE → OVERLAP → WIPE → DOT
The last selected fader mode is indicated first of all.

(2) Press START/STOP. The fader indicator stops flashing.
After the fader in/out is carried out, your camcorder automatically returns to normal mode.

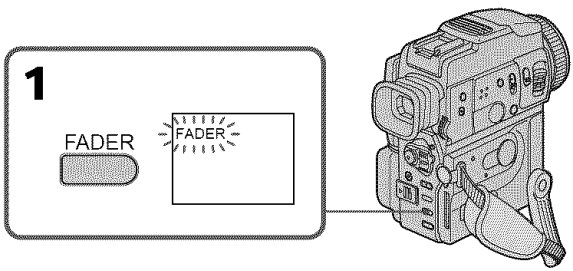

To cancel the fader function

Before pressing START/STOP, press FADER until the indicator disappears.

Note
You cannot use the following functions while using the fader function. Also, you cannot use the fader function while using the following functions:
- Digital effect
- Low lux mode of PROGRAM AE (Overlap, Wipe, or Dot function only)
- Super NightShot
- Tape photo recording

When you select OVERLAP, WIPE, or DOT
Your camcorder automatically stores the image recorded on a tape. As the image is being stored, the indicators flash fast, and the playback picture disappears. At this stage, the picture may not be recorded clearly, depending on the tape condition.

While in MEMORY mode
You cannot use the fader function.

Using special effects - Picture effect

You can digitally process images to obtain special effects like those in films or on TV.

NEG. ART [a] : The color and brightness of the picture is reversed.
SEPIA : The picture gets sepia.
B&W : The picture appears in monochrome (black-and-white).
SOLARIZE [b] : The light intensity is clearer, and the picture looks like an illustration.
SLIM [c] : The picture expands vertically.
STRETCH [d] : The picture expands horizontally.
PASTEL [e] : The contrast of the picture is emphasized, and the picture looks like an animated cartoon.
MOSAIC [f] : The picture gets mosaic-patterned.

[a] **[b]** **[c]** **[d]** **[e]** **[f]**

(1) In CAMERA mode, select P EFFECT in [M] in the menu settings (p. 84).
(2) Turn the SEL/PUSH EXEC dial to select the desired picture effect mode.

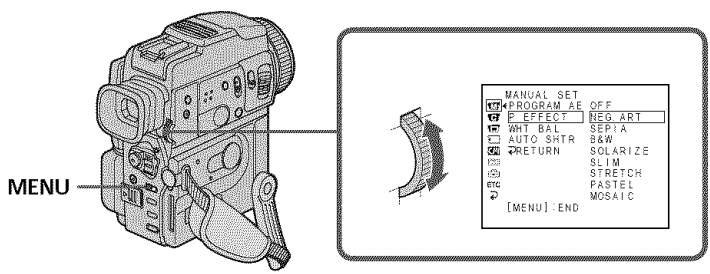

To cancel the picture effect function

Set P EFFECT to OFF in the menu settings.

While using the picture effect function

You cannot select OLD MOVIE mode with DIGITAL EFFECT.

When you turn the power off

The picture effect is automatically canceled.

Using special effects - Digital effect

You can add special effects to recorded pictures using the various digital functions. The sound is recorded normally.

STILL
You can record a still image so that it is superimposed on a moving picture.

FLASH (FLASH MOTION)
You can record still images successively at constant intervals.

LUMI. (LUMINANCEKEY)
You can swap a brighter area in a still picture with a moving picture.

TRAIL
You can record the picture so that an incidental image like a trail is left.

SLOW SHTR (SLOW SHUTTER)
You can slow down the shutter speed. The slow shutter mode is good for recording dark pictures more brightly.

OLD MOVIE
You can add an old movie type atmosphere to pictures. Your camcorder automatically sets the wide mode to ON and picture effect to SEPIA, and the appropriate shutter speed.

STILL

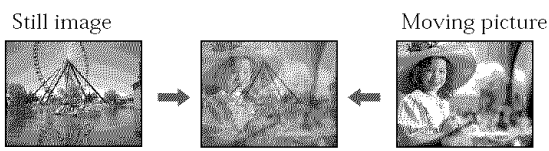

LUMI.

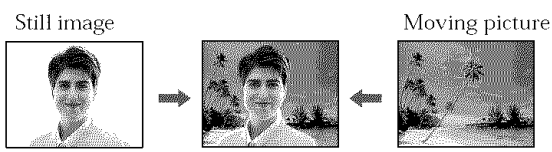

(1) In CAMERA mode, press DIGITAL EFFECT. The digital effect indicator appears.
(2) Turn the SEL/PUSH EXEC dial to select the desired digital effect mode. The indicator changes as follows:
STILL ⟷ FLASH ⟷ LUMI. ⟷ TRAIL ⟷ SLOW SHTR ⟷ OLD MOVIE
(3) Press the SEL/PUSH EXEC dial. The indicator lights up and the bars appear. In the STILL and LUMI. modes, the still image is stored in memory.
(4) Turn the SEL/PUSH EXEC dial to adjust the effect.

Items to be adjusted

STILL	The rate of the still image you want to superimpose on the moving picture
FLASH	The interval of flash motion
LUMI.	The color scheme of the area in the still image which is to be swapped with a moving picture
TRAIL	The time until the incidental image vanishes
SLOW SHTR	Shutter speed. The larger the shutter speed number, the slower the shutter speed.
OLD MOVIE	No adjustment necessary

The more bars there are on the screen, the stronger the digital effect. The bars appear in the following modes: STILL, FLASH, LUMI. and TRAIL.

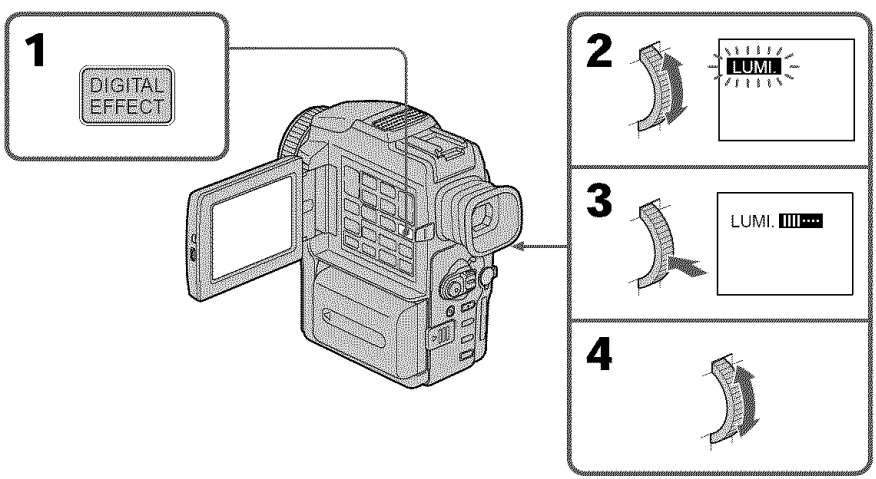

To cancel the digital effect function

Press DIGITAL EFFECT.

Notes

- The following functions do not work during digital effect:
  - Fader
  - Low lux mode of PROGRAM AE
  - Tape photo recording
  - Super NightShot
- The following function does not work in the slow shutter mode:
  - PROGRAM AE
- The following functions do not work in the old movie mode:
  - Wide mode
  - Picture effect
  - PROGRAM AE

When you turn the power off

The digital effect is automatically canceled.

When recording in the slow shutter mode

Auto focus may not be effective. Focus manually using a tripod.

Shutter speed

Shutter speed number	Shutter speed
SLOW SHTR 1	1/30
SLOW SHTR 2	1/15
SLOW SHTR 3	1/8
SLOW SHTR 4	1/4

Using the PROGRAM AE function

You can select PROGRAM AE (Auto Exposure) mode to suit your specific shooting requirements.

Spotlight mode
This mode prevents people's faces, for example, from appearing excessively white when shooting subjects lit by strong light in the theater.

Soft portrait mode
This mode brings out the subject while creating a soft background for subjects such as people or flowers.

Sports lesson mode
This mode minimizes shake on fast-moving subjects such as in tennis or golf.

Beach & ski mode
This mode prevents people's faces from appearing dark in strong light or reflected light, such as at a beach in midsummer or on a ski slope.

Sunset & moon mode
This mode allows you to maintain atmosphere when you are recording sunsets, general night views, fireworks displays and neon signs.

Landscape mode
This mode is for when you are recording distant subjects such as mountains and prevents your camcorder from focusing on glass or metal mesh in windows when you are recording a subject behind glass or a screen.

Low lux mode
This mode makes subjects brighter in insufficient light.

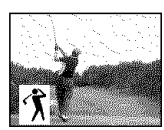
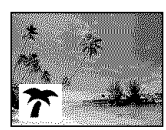

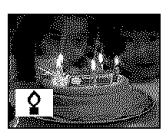

(1) In CAMERA or MEMORY mode, select PROGRAM AE in [M] in the menu settings (p. 84).

(2) Select the desired mode by turning the SEL/PUSH EXEC dial.
The indicator changes as follows:

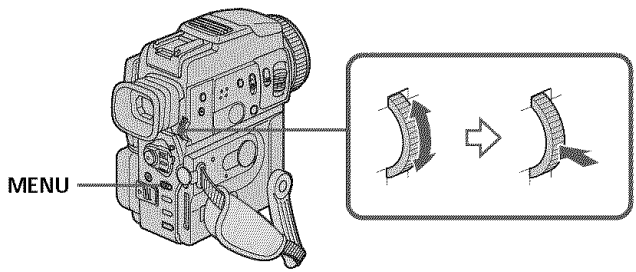

To turn the PROGRAM AE function off

Set PROGRAM AE to AUTO in the menu settings.

Notes

- In the spotlight, sports lesson and beach & ski modes, you cannot take close-ups. This is because your camcorder is set to focus only on subjects in the middle to far distance.
- In the sunset & moon and landscape modes, your camcorder is set to focus only on distant subjects.
- The following functions do not work in the PROGRAM AE mode:
  - Slow shutter
  - Old movie
- The following functions do not work in the low lux mode:
  - Digital effect
  - Overlap
  - Wipe
  - Dot
  - Recording with the flash
- While setting the NIGHTSHOT to ON, the PROGRAM AE function does not work. (The indicator flashes.)
- While shooting in memory mode, the low lux and sports lesson modes do not work. (The indicator flashes.)

While WHT BAL is set to AUTO in the menu settings

The white balance is adjusted even if the PROGRAM AE function is selected.

Even if the PROGRAM AE function is selected

You can adjust the exposure.

If you are recording under a discharge tube such as a fluorescent lamp, sodium lamp or mercury lamp

Flickering or changes in color may occur in the following modes. If this happens, turn the PROGRAM AE function off.
- Soft portrait mode
- Sports lesson mode

Adjusting the exposure manually

You can manually adjust and set the exposure. Adjust the exposure manually in the following cases:
- The subject is backlit
- Bright subject and dark background
- To record dark pictures (e.g. night scenes) faithfully

(1) In CAMERA or MEMORY mode, press EXPOSURE. The exposure indicator appears.
(2) Turn the SEL/PUSH EXEC dial to adjust the brightness.

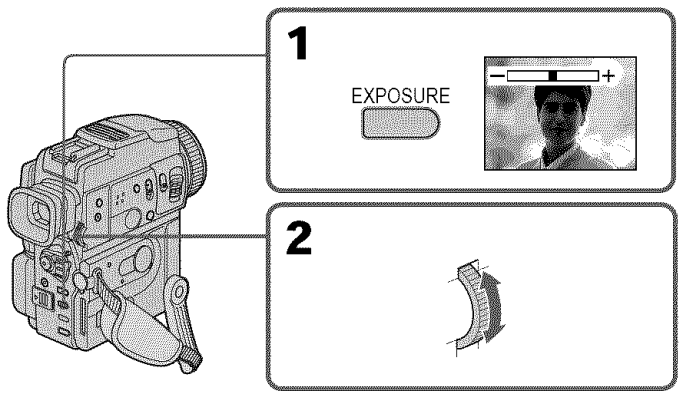

To return to the automatic exposure mode

Press EXPOSURE.

Note

When you adjust the exposure manually, the backlight function does not work.

If you change the PROGRAM AE mode or slide NIGHTSHOT to ON

Your camcorder automatically returns to the automatic exposure mode.

Focusing manually

You can gain better results by manually adjusting the focus in the following cases:
- The autofocus mode is not effective when shooting:
  - subjects through glass coated with water droplets
  - horizontal stripes
  - subjects with little contrast with backgrounds such as walls and sky
- When you want to change the focus from a subject in the foreground to a subject in the background.
- Shooting a stationary subject when using a tripod.

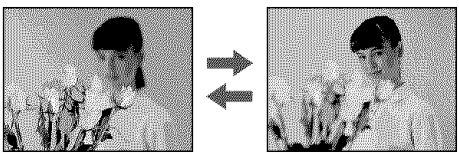

(1) In CAMERA or MEMORY mode, press FOCUS lightly. The indicator appears.
(2) Turn the focus ring to sharpen focus.

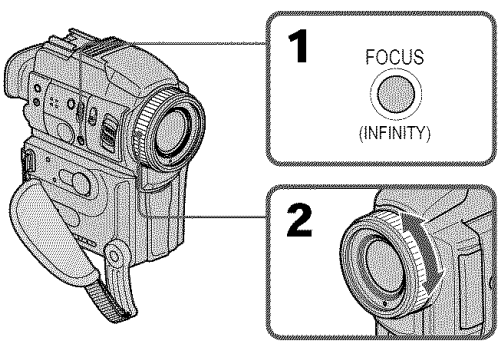

To return to the autofocus mode

Press FOCUS lightly to turn off the indicator.

To record distant subjects

When you press FOCUS down firmly, the lens focuses on and indicator appears. When you release FOCUS, your camcorder returns to the manual focus mode. Use this mode when your camcorder focuses on near objects even though you are trying to shoot a distant object.

To focus precisely
It is easier to focus on the subject if you adjust the zoom to shoot at the "W" (wide-angle) after focusing at the "T" (telephoto) position.

When you shoot close to the subject
Focus at the end of the "W" (wide-angle) position.

changes as follows:
▲ when recording a distant subject
● when the subject is too close to focus on

Focal distance information is displayed as 1.2 m for about 3 seconds on the LCD screen or in the viewfinder in the following cases:
– When switching the focus adjustment mode from autofocus to manual
– When turning the focus ring

Focal distance information
– This information is aids focusing if it is not easy to focus on the subject, for example, when recording in the dark. Use this information as a rough guide to get a sharp focus.
– You cannot get correct information if you have attached a conversion lens to your camcorder.
– When focal distance is from more than 50 m to ∞, focal distance infomation is displayed as 50 m.

Playing back a tape with picture effects

During playback, you can process a scene using the picture effect functions: NEG. ART, SEPIA, B&W and SOLARIZE.

(1) In the playback or playback pause mode, select the desired picture effect mode in [VM] in the menu settings (p. 84).

(2) Select the desired mode by turning the SEL/PUSH EXEC dial.
For details of each picture effect function, see page 38.

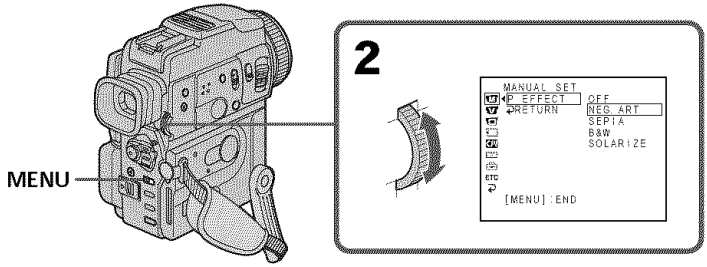

To cancel the picture effect function

Set P EFFECT to OFF in the menu settings.

Notes

- You cannot process the picture that is input from other equipment using the picture effect function.
- To record pictures that you have processed using the picture effect function, record the pictures on the VCR, using your camcorder as a player.

Pictures processed by the picture effect function

Pictures processed by the picture effect function are not output through the DV IN/OUT jack.

When you set the POWER switch to OFF (CHG) or stop playing back

The picture effect function is automatically canceled.

Playing back a tape with digital effects

During playback, you can process a scene using the digital effect functions: STILL, FLASH, LUMI. and TRAIL.

(1) In the playback or playback pause mode, press DIGITAL EFFECT and turn the SEL/PUSH EXEC dial until the desired digital effect mode flashes.
The indicator changes as follows:
STILL ⟷ FLASH ⟷ LUMI. ⟷ TRAIL

(2) Press the SEL/PUSH EXEC dial.
The digital effect indicator lights up and the bars appear. In the STILL or LUMI. mode, the picture is captured and is stored in memory as a still image at the time you press the SEL/PUSH EXEC dial.

(3) Turn the SEL/PUSH EXEC dial to adjust the effect.
For details of each digital effect function, see page 39.

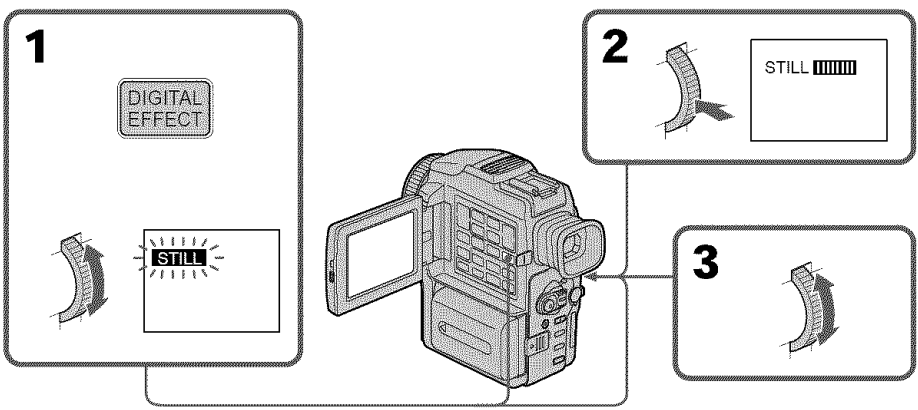

To cancel the digital effect function

Press DIGITAL EFFECT.

Notes

- You cannot process externally input scenes using the digital effect function.
- To record pictures that you have processed using the digital effect, record the pictures on the VCR, using your camcorder as a player.

Pictures processed by the digital effect function

- Pictures processed by the digital effect function are not output through the DV IN/OUT jack.
- You cannot use the PB ZOOM function for pictures processed by the digital effect function.

When you set the POWER switch to OFF (CHG) or stop playing back

The digital effect function is automatically canceled.

Enlarging images recorded on tapes – Tape PB ZOOM

You can enlarge playback images recorded on tapes. You can also dub the enlarged images to tapes or copy to "Memory Stick"s. Besides the operation described here, your camcorder can enlarge still images recorded on "Memory Stick"s.

(1) In the playback or playback pause mode, press PB ZOOM on your camcorder. The image is enlarged, and ↑↓ appears on the LCD screen or in the viewfinder.

(2) Turn SEL/PUSH EXEC dial to move the enlarged image, then press the dial.
↑ : The image moves downwards.
↓ : The image moves upwards.

(3) Turn SEL/PUSH EXEC dial to move the enlarged image, then press the dial.
→ : The image moves leftward. (Turn the dial to upwards.)
← : The image moves rightward. (Turn the dial to downwards.)

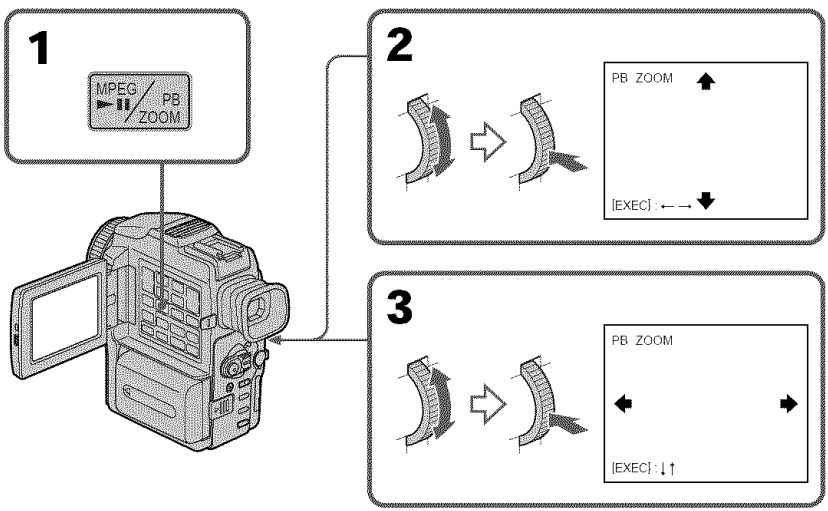

To cancel the PB ZOOM function

Press PB ZOOM.

Notes

- You cannot process externally input scenes using the PB ZOOM function with your camcorder.
- You cannot record images that you have processed using the PB ZOOM function with your camcorder. To record images that you have processed using the PB ZOOM function, record the images on the VCR using your camcorder as a player.

The PB ZOOM function is automatically canceled when you operate the following functions:

– Set the POWER switch to OFF (CHG).
– Stop playback.
– Display the menu settings.
– Display the title.

Images in the PB ZOOM

Images in the PB ZOOM mode are not output through the DV IN/OUT jack.

Quickly locating a scene using the zero set memory function

Your camcorder goes forward or backward to automatically stop at a desired scene having a tape counter value of "0:00:00". Use the Remote Commander for this operation.

(1) In the playback mode, press DISPLAY.
(2) Press ZERO SET MEMORY at the point you want to locate later. The tape counter shows "0:00:00" and the ZERO SET MEMORY indicator flashes.
(3) Press ■ when you want to stop playback.
(4) Press ◀◀ to rewind the tape to the tape counter's zero point. The tape stops automatically when the tape counter reaches approximately zero. The ZERO SET MEMORY indicator disappears and the time code appears.
(5) Press ▶. Playback starts from the counter's zero point.

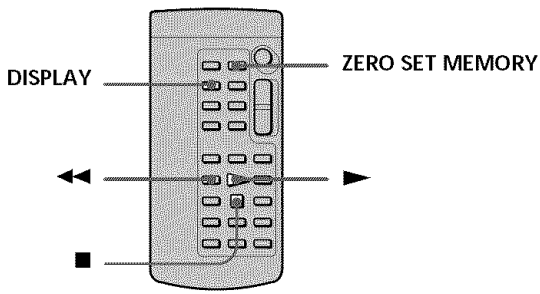

Notes

- When you press ZERO SET MEMORY before rewinding the tape, the zero set memory function will be canceled.
- There may be a discrepancy of several seconds from the time code.

If a tape has a blank portion in the recorded portions

The zero set memory function may not work correctly.

The zero set memory functions also in the recording standby mode

When you insert a scene in the middle of a recorded tape, press ZERO SET MEMORY at the point you want to end the insertion. Rewind the tape to the insert start point, and start recording. Recording stops automatically at the tape counter zero point. Your camcorder returns to the standby mode.

Searching the boundaries of recorded tape by title – Title search

CM only

If you use a tape with cassette memory, you can search for the boundaries of recorded tape by title **(Title search)**. Use the Remote Commander for this operation.

(1) Set the POWER switch to VCR.
(2) Set CM SEARCH in CM to ON in the menu settings (p. 84). The default setting is ON.
(3) Press SEARCH MODE on the Remote Commander repeatedly, until the TITLE SEARCH indicator appears.
The indicator changes as follows:
TITLE SEARCH → DATE SEARCH → PHOTO SEARCH → PHOTO SCAN
(4) Press ⏮ or ⏭ on the Remote Commander to select the title for playback.
Your camcorder automatically starts playback of the scene having the title that you selected.

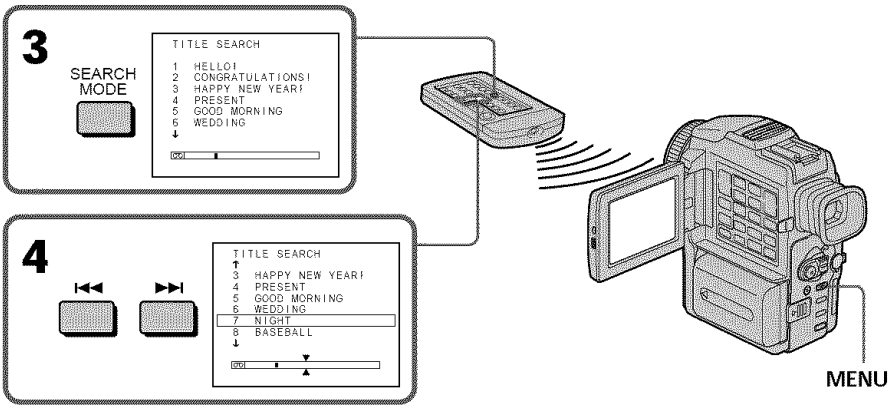

To stop searching

Press ■.

If you use a tape without cassette memory
You cannot superimpose or search a title.

In the ▭ mark
- The bar in the ▭ mark indicates the present point on the tape.
- The ⧗ mark in the ▭ indicates the actual point you are trying to search.

If a tape has a blank portion between recorded portions
The title search function may not work correctly.

To superimpose a title
See page 77.

Searching a recording by date – Date search

You can automatically search for the point where the recording date changes and start playback from that point **(Date search)**. Use a tape with cassette memory for convenience. Use the Remote Commander for this operation.
Use this function to check where recording dates change or to edit the tape at each recording date.

Searching for the date by using cassette memory

You can use this function only when playing back a tape with cassette memory.

(1) Set the POWER switch to VCR.

(2) Set CM SEARCH in CM to ON in the menu settings (p. 84). The default setting is ON.

(3) Press SEARCH MODE on the Remote Commander repeatedly, until the DATE SEARCH indicator appears.
The indicator changes as follows:
TITLE SEARCH → DATE SEARCH → PHOTO SEARCH → PHOTO SCAN

(4) Press ⏮ or ⏭ on the Remote Commander to select the date for playback.
Your camcorder automatically starts playback at the beginning of the selected date.

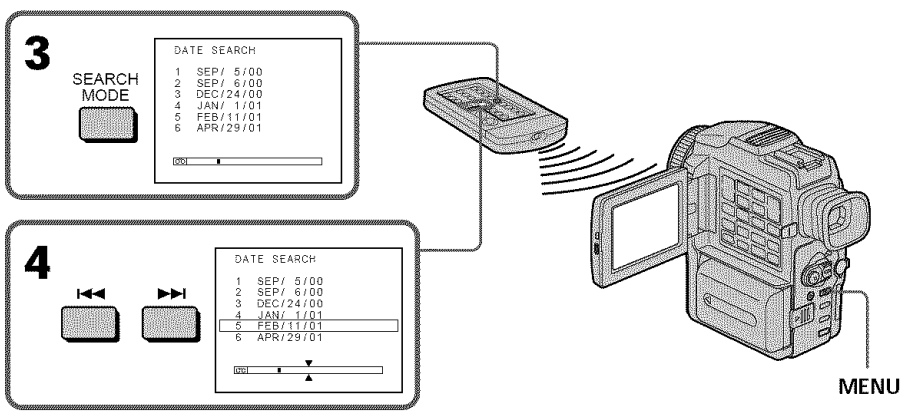

To stop searching

Press ■.

Note
If one day's recording is less than 2 minutes, your camcorder may not accurately find the point where the recording date changes.

In the [ ] mark
- The bar in the [ ] mark indicates the present point on the tape.
- The ⧗ mark in the [ ] indicates the actual point you are trying to search.

If a tape has a blank portion between recorded portions
The date search function may not work correctly.

Cassette memory
The tape cassette memory can hold 6 recording date data. If you search the date among 7 or more data, see "Searching for the date without using cassette memory" below.

Searching for the date without using cassette memory

(1) Set the POWER switch to VCR.
(2) Set CM SEARCH in [ ] to OFF in the menu settings (p. 84).
(3) Press SEARCH MODE on the Remote Commander repeatedly, until the DATE SEARCH indicator appears.
The indicator changes as follows:
DATE SEARCH → PHOTO SEARCH → PHOTO SCAN
(4) Press ⏮ on the Remote Commander to search for the previous date or press ⏭ on the Remote Commander to search for the next date. Your camcorder automatically starts playback at the point where the date changes. Each time you press ⏮ or ⏭, your camcorder searches for the previous or next date.

To stop searching
Press ■.

Searching for a photo – Photo search/Photo scan

You can search for a still image you have recorded on a mini DV tape **(photo search)**. You can also search for still images one after another and display each image for 5 seconds automatically regardless of cassette memory **(photo scan)**. Use the Remote Commander for these operations.
Use this function to check or edit still images.

Searching for a photo by using cassette memory

You can use this function only when playing back a tape with cassette memory.

(1) Set the POWER switch to VCR.
(2) Set CM SEARCH in CM to ON in the menu settings (p. 84). The default setting is ON.
(3) Press SEARCH MODE on the Remote Commander repeatedly, until the PHOTO SEARCH indicator appears.
The indicator changes as follows:
TITLE SEARCH → DATE SEARCH → PHOTO SEARCH → PHOTO SCAN
(4) Press ⏮ or ⏭ on the Remote Commander to select the date for playback.
Your camcorder automatically starts playback of the photo having the date that you selected.

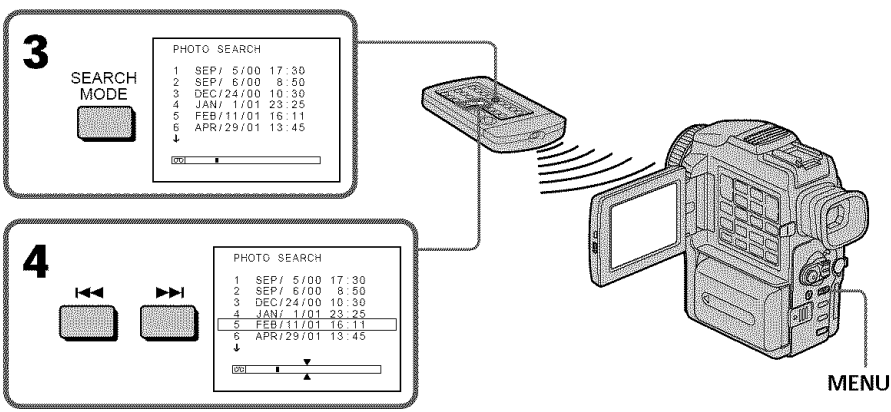

To stop searching

Press ■.

In the [ ] mark

- The bar in the [ ] mark indicates the present point on the tape.
- The ⧗ mark in the [ ] indicates the actual point you are trying to search.

If a tape has a blank portion between recorded portions

The photo search function may not work correctly.

The available number of photos that can be searched using the cassette memory

The available number is up to 12 photos. However, you can search 13 photos or more using the scanning photo function.

Searching for a photo without using cassette memory

(1) Set the POWER switch to VCR.
(2) Set CM SEARCH in [CM] to OFF in the menu settings (p. 84).
(3) Press SEARCH MODE on the Remote Commander repeatedly, until the PHOTO SEARCH indicator appears.
The indicator changes as follows:
DATE SEARCH → PHOTO SEARCH → PHOTO SCAN
(4) Press ⏮ or ⏭ on the Remote Commander to select the photo for playback.
Each time you press ⏮ or ⏭, your camcorder searches for the previous or next photo.
Your camcorder automatically starts playback of the photo.

To stop searching

Press ■.

Scanning photo

(1) Set the POWER switch to VCR.
(2) Press SEARCH MODE on the Remote Commander repeatedly, until the PHOTO SCAN indicator appears.
The indicator changes as follows:
DATE SEARCH → PHOTO SEARCH → PHOTO SCAN
(3) Press ⏮ or ⏭ on the Remote Commander.
Each photo is played back for about 5 seconds automatically.

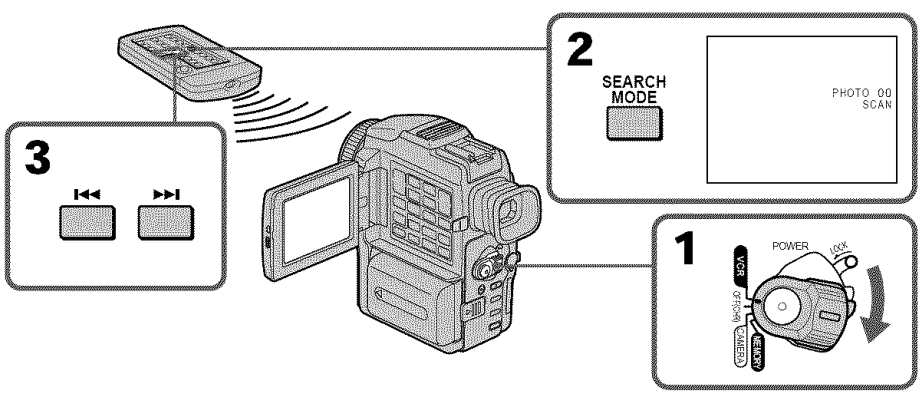

To stop scanning

Press ■.

Dubbing a tape

Using the A/V connecting cable

Connect your camcorder to the VCR using the A/V connecting cable supplied with your camcorder.

(1) Insert a blank tape (or a tape you want to record over) into the VCR, and insert the recorded tape into your camcorder.
(2) Prepare the VCR for recording, then set the input selector to LINE. Refer to the operating instructions of the VCR.
(3) Set the POWER switch to VCR.
(4) Play back the recorded tape on your camcorder.
(5) Start recording on the VCR. Refer to the operating instructions of your VCR.

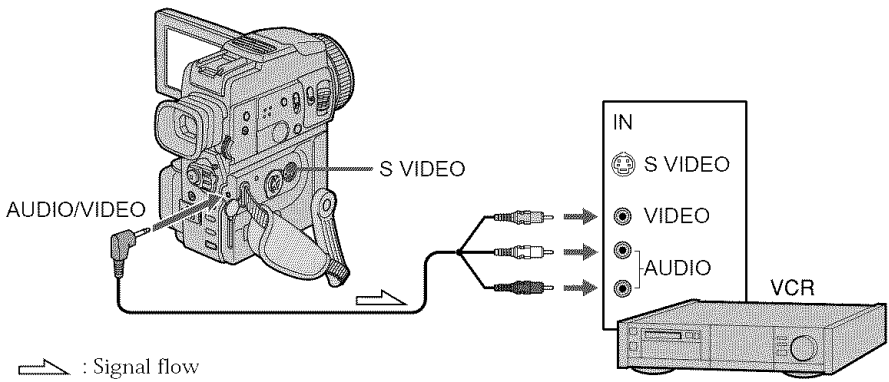

: Signal flow

When you have finished dubbing a tape

Press ■ on both your camcorder and the VCR.

Before a dubbing

Set DISPLAY to LCD in the menu settings. (The default setting is LCD.)

Be sure to clear the indicators from the screen

If they are displayed, press the following buttons not to record the indicators on the dubbed tape:
- DISPLAY
- DATA CODE on the Remote Commander
- SEARCH MODE on the Remote Commander

You can edit on VCRs that support the following systems

8 mm, Hi8 Hi8, VHS VHS, S-VHS S-VHS, VHSC VHSC, S-VHSC S-VHSC, Beta Betamax, ED Beta ED Betamax, Mini DV mini DV, DV DV, Digital8

If your VCR is a monaural type

Connect the yellow plug of the A/V connecting cable to the video input jack and the white or the red plug to the audio input jack on the VCR or the TV. When the white plug is connected, the left channel audio is output, and the red plug is connected, the right channel audio is output.

If your VCR has an S video jack

Connect using an S video cable (not supplied) to obtain high-quality pictures.
With this connection, you do not need to connect the yellow (video) plug of the A/V connecting cable.
Connect an S video cable (not supplied) to the S video jacks of both your camcorder and the VCR.
This connection produces higher quality DV format pictures.

Using the i.LINK cable (DV connecting cable)

Simply connect the i.LINK cable (DV connecting cable) (not supplied) to DV IN/OUT and to DV IN of the DV products. With digital-to-digital connection, video and audio signals are transmitted in digital form for high-quality editing. You cannot dub the titles, display indicators or the contents of cassette memory or letters on the "Memory Stick" index screen.

Set the input selector on the VCR to the DV input position if the VCR is equipped with the input selector.

(1) Insert a blank tape (or a tape you want to record over) into the VCR, and insert the recorded tape into your camcorder.

(2) Prepare the VCR for recording.
Set the input selector to LINE. Refer to the operating instructions of the VCR.

(3) Set the POWER switch to VCR.

(4) Play back the recorded tape on your camcorder.

(5) Start recording on the VCR. Refer to the operating instructions of the VCR.

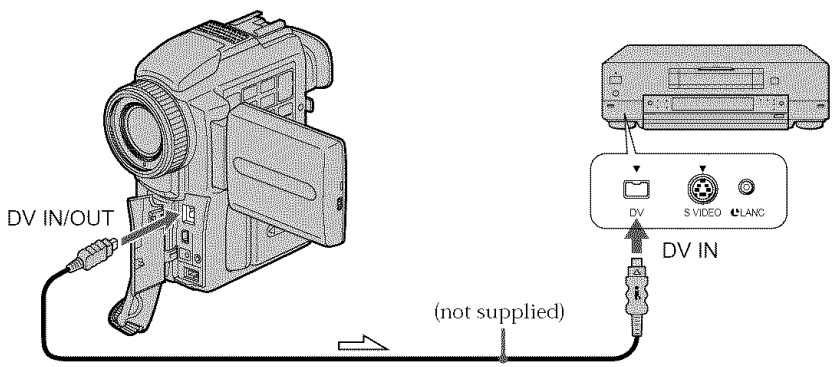

: Signal flow

When you have finished dubbing a tape

Press ■ on both your camcorder and the connected DV product.

You can connect one VCR only using the i.LINK cable (DV connecting cable)

See page 140 for more information about i.LINK.

The following functions do not work during digital editing:

- Picture effect
- Digital effect
- PB ZOOM

If you record a playback pause picture with the DV IN/OUT jack

The recorded picture becomes rough. And when you play back the picture using the other video equipment, the picture may jitter.

Dubbing only desired scenes - Digital program editing

You can duplicate selected scenes (programs) for editing onto a tape without operating the VCR.
Scenes can be selected by frame. You can set up to 20 programs.

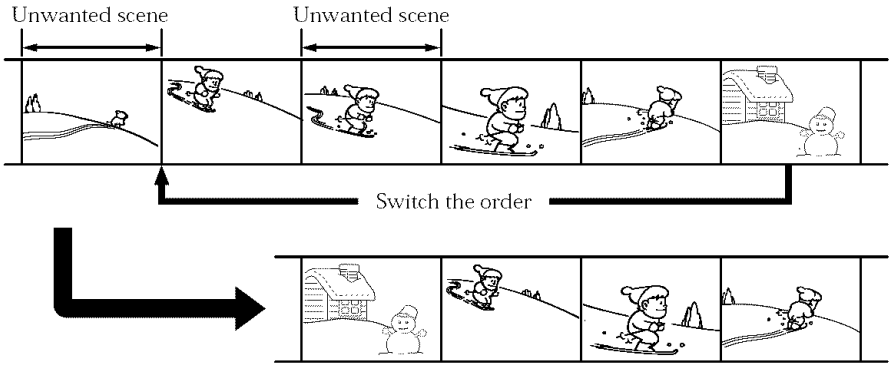

Before operating the Digital program editing

Step 1 Connecting the VCR (p. 58).
Step 2 Setting the VCR for operation (p. 59, 63).
Step 3 Adjusting the synchronicity of the VCR (p. 64).
When you dub using the same VCR again, you can skip steps 2 and 3.

Using the Digital program editing function

Operation 1 Making the program (p. 66).
Operation 2 Performing a Digital program editing (dubbing a tape) (p. 67).

Step 1: Connecting the VCR

You can connect both an A/V connecting cable and an i.LINK cable (DV connecting cable).
When you use the A/V connecting cable, connect the devices as illustrated in page 56.
When you use an i.LINK cable (DV connecting cable), connect the devices as illustrated in page 57.

Step 2: Setting the VCR to operate with the A/V connecting cable

To edit using the VCR, send the control signal by infrared rays to the remote sensor on the VCR.
When you connect using an A/V connecting cable, follow the procedures below, (1)~(4), to send the control signal correctly.

(1) Set the IR SETUP code

① Set the POWER switch to VCR on your camcorder.
② Turn the power of the connected VCR on, then set the input selector to LINE. When you connect a video camera recorder, set its power switch to VCR/VTR.
③ Press MENU to display the menu.
④ Turn the SEL/PUSH EXEC dial to select ETC, then press the dial.
⑤ Turn the SEL/PUSH EXEC dial to select EDIT SET, then press the dial.
⑥ Turn the SEL/PUSH EXEC dial to select CONTROL, then press the dial.
⑦ Turn the SEL/PUSH EXEC dial to select IR, then press the dial.
⑧ Turn the SEL/PUSH EXEC dial to select IR SETUP, then press the dial.
⑨ Turn the SEL/PUSH EXEC dial to select the IR SETUP code of your VCR, then press the dial.
Check the cord in "About the IR SETUP code." (P. 60)

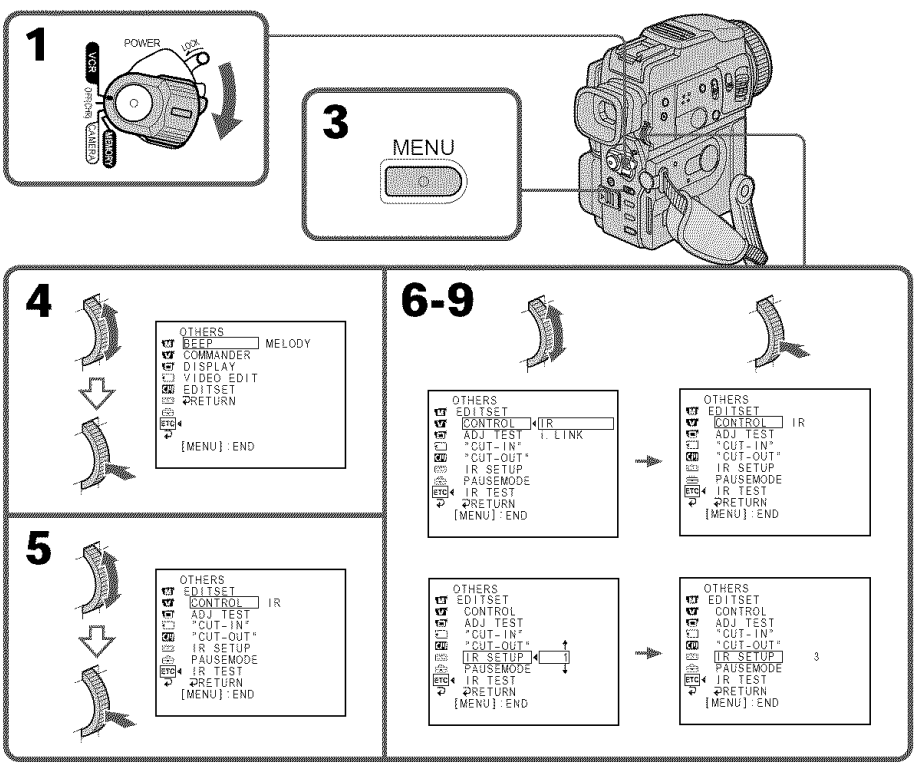

About the IR SETUP code

The IR SETUP code is stored in the memory of your camcorder. Be sure to set the correct code, depending on your VCR. The default setting is Code number 1.

Brand	Remote control mode
Sony	1, 2, 3, 4, 5, 6
Admiral (M. Wards)	89
Aiwa	80
Audio Dynamic	21, 35
Bell&Howell (M. Wards)	36
Brocsonic	70, 82
Canon	77, 78, 97
Citizen	47
Craig	73, 47
Curtis Mathis	8, 80, 77
Daewoo	26, 40, 77
DBX	21, 33, 35
Dimensia	8
Emerson	26, 82, 59, 48, 70, 81
Fisher	36, 45, 37, 44
Funai	80
General Electric	87, 8, 77, 32*, 94*
Goldstar	47
Hitachi	78, 8, 42
Instant Replay	77, 78
JC Penny	77, 42, 8, 36, 21, 33, 35
JVC	21, 12, 13, 14, 33, 35
Kenwood	21, 33, 47, 35
LXI (Sears)	80, 47, 42, 44, 45, 36, 37
Magnavox	83, 78, 77
Marantz	21, 33, 35
Marta	47
Memorex	77, 37
Minolta	42, 8
Mitsubishi/MGA	28, 22, 23, 24

Brand	Remote control mode
Multitech	23, 80, 32
NEC	21, 33, 35
Olympic	77, 78
Panasonic	16, 17, 78, 77, 96
Pentax	42,8
Philco	78, 77
Philips	83, 78, 77
Pioneer	78
Quasar	78, 77, 16, 17
RCA/PROSCAN	8, 42, 16, 77, 83, 7, 40, 41, 78*
Realistic	77, 36
Sansui	21
Singer	73
Samsung	94, 41, 32, 32*, 94*, 24*
Sanyo	36, 37
Scott	40, 41, 32, 37, 28, 22, 23, 24
Sharp	89, 88
Shintom	73
Signature 2000 (M. Wards)	80, 89
Sylvania	83, 78, 77, 80
Symphonic	80
Tashiro	47
Tatung	21, 33, 35
Teac	21, 33, 80, 35
Technics	77, 78
Toshiba	40, 7
Wards	89, 88, 37, 95, 47
Yamaha	36, 21, 33, 35
Zenith	95

* TV/VCR component

Note on IR SETUP code

Digital program editing is not possible if the VCR does not support IR SETUP codes.

(2) Setting the modes to cancel the recording pause on the VCR

① Turn the SEL/PUSH EXEC dial to select PAUSEMODE, then press the dial.
② Turn the SEL/PUSH EXEC dial to select the mode to cancel recording pause on the VCR, then press the dial.

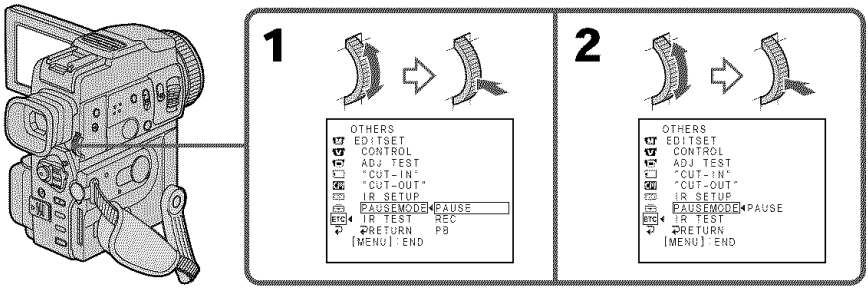

The buttons to cancel recording pause on the VCR

The buttons vary depending on your VCR. To cancel recording pause:
- Select "PAUSE" if the button to cancel recording pause is ❚❚.
- Select "REC" if the button to cancel recording pause is ●.
- Select "PB" if the button to cancel recording pause is ►.

(3) Setting your camcorder and the VCR to face each other

Locate the infrared rays emitter of your camcorder and face it towards the remote sensor of the VCR.
Set the devices about 11 7/8 in. (30 cm) apart, and remove any obstacles between the devices.

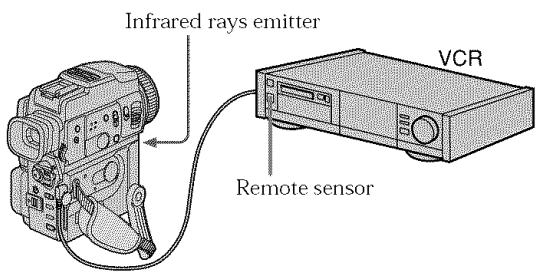

(4) Confirming the VCR operation

① Insert a recordable tape into the VCR, then set to recording pause.
② Turn the SEL/PUSH EXEC dial to select IR TEST, then press the dial.
③ Turn the SEL/PUSH EXEC dial to select EXECUTE, then press the dial.
If the VCR starts recording, the setting is correct.
When finished, the indicator changes to COMPLETE.

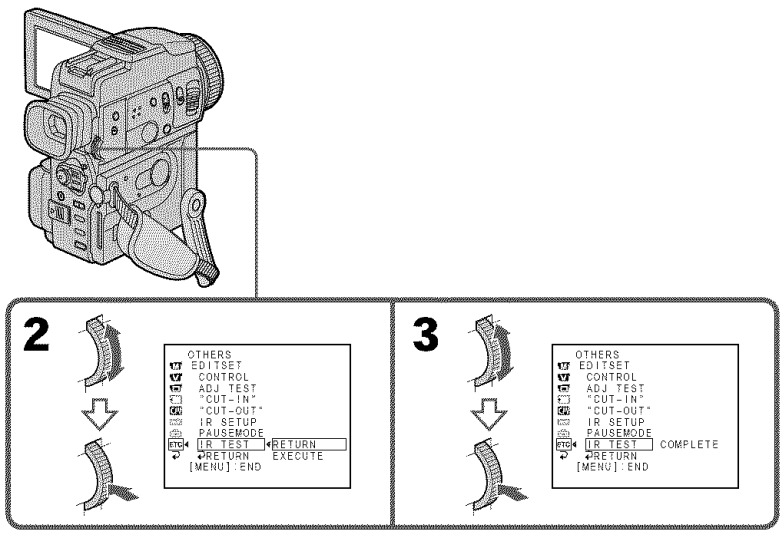

When the VCR does not operate correctly

- After checking the code in "About the IR SETUP" code, set the IR SETUP or the PAUSEMODE again.
- Place your camcorder at least 11 7/8 in. (30 cm) away from the VCR.
- Refer to the operating instructions of your VCR.

Step 2: Setting the VCR to operate with the i.LINK cable (DV connecting cable)

When you connect using i.LINK cable (DV connecting cable) (not supplied), follow the procedures below.

(1) Set the POWER switch to VCR on your camcorder .

(2) Turn the power of the connected VCR on, then set the input selector to DV input.
When you connect a digital video camera recorder, set its power switch to VCR/VTR.

(3) Press MENU to display the menu.

(4) Turn the SEL/PUSH EXEC dial to select ETC, then press the dial.

(5) Turn the SEL/PUSH EXEC dial to select EDIT SET, then press the dial.

(6) Turn the SEL/PUSH EXEC dial to select CONTROL, then press the dial.

(7) Turn the SEL/PUSH EXEC dial to select i.LINK, then press the dial.

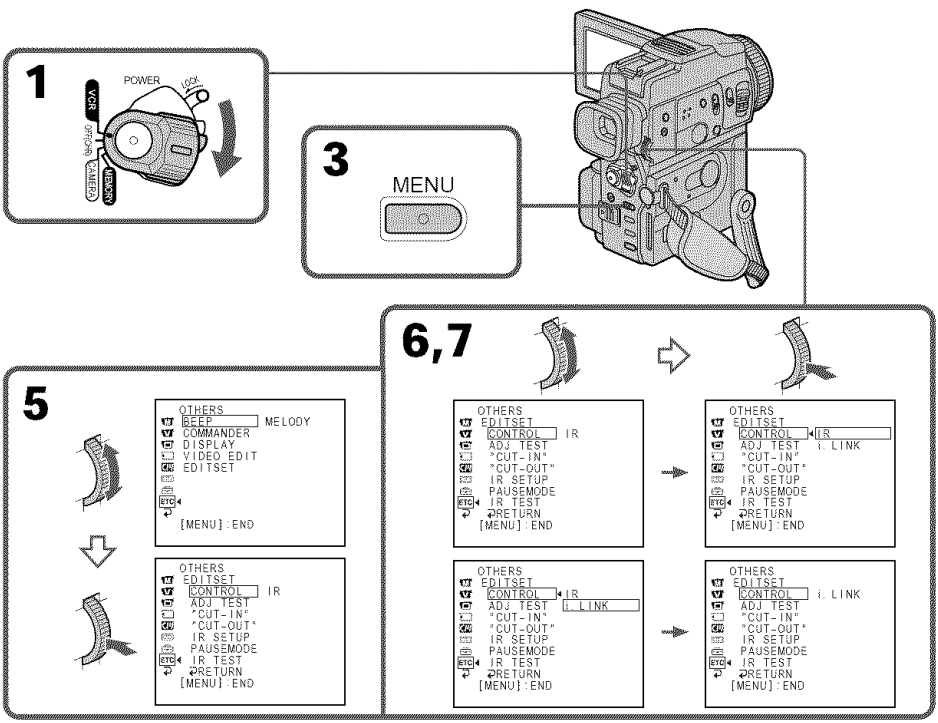

Step 3: Adjusting the synchronicity of the VCR

You can adjust the synchronicity of your camcorder and the VCR. Have a pen and paper ready for notes. Before operation, eject a cassette from your camcorder.

(1) Set the POWER swtich to VCR on your camcorder.
(2) Insert a blank tape (or a tape you want to record over) into the VCR, then set to recording pause.
When you select i.LINK in CONTROL, you do not need to set to recording pause.
(3) Turn the SEL/PUSH EXEC dial to select ADJ TEST, then press the dial.
(4) Turn the SEL/PUSH EXEC dial to select EXECUTE, then press the dial.
IN and OUT are recorded on an image for 5 times each to calculate the numerical values for adjusting the synchronicity.
The EXECUTING indicator flashes on the LCD screen or in the viewfinder.
When finished, the indicator changes to COMPLETE.
(5) Rewind the tape in the VCR, then start slow playback.
Take a note of the opening numerical value of each IN and the closing numerical value of each OUT.
(6) Calculate the average of all the opening numerical values of each IN, and the average of all the closing numerical values of each OUT.
(7) Turn the SEL/PUSH EXEC dial to select "CUT-IN", then press the dial.
(8) Turn the SEL/PUSH EXEC dial to select the average numerical value of IN, then press the dial.
The calculated start position for recording is set.
(9) Turn the SEL/PUSH EXEC dial to select "CUT-OUT", then press the dial.
(10) Turn the SEL/PUSH EXEC dial to select the average numerical value of OUT, then press the dial.
The calculated stop position for recording is set.
(11) Turn the SEL/PUSH EXEC dial to select ↩ RETURN, then press the dial.

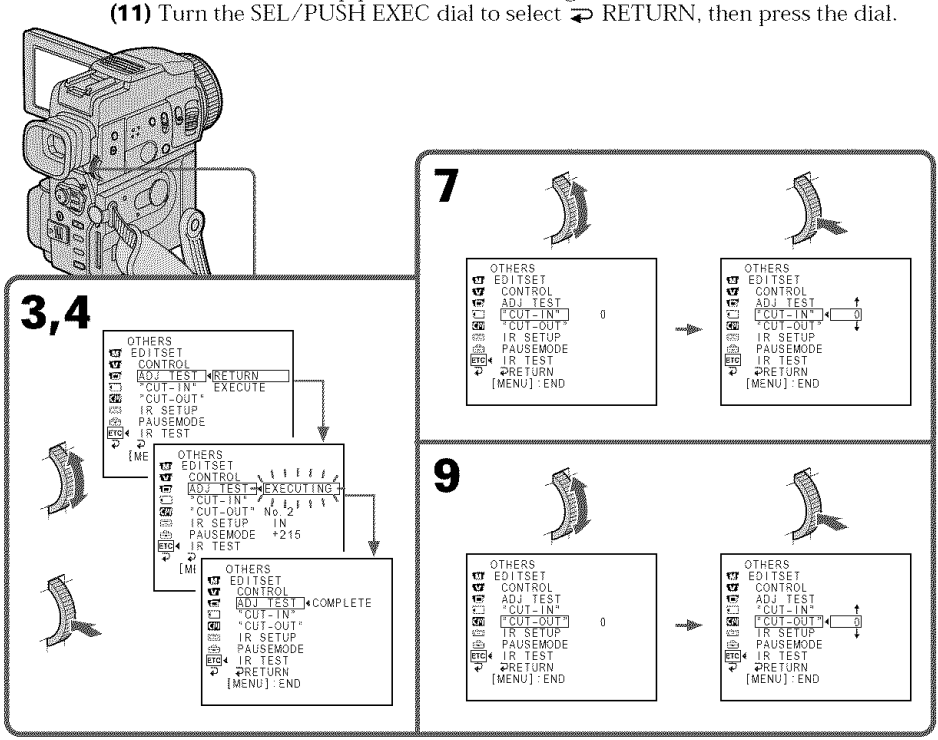

Notes

- You cannot dub the titles, display indicators, or the contents of cassette memory.
- When you connect with an i.LINK cable (DV connecting cable), you may not be able to operate the dubbing function correctly, depending on the VCR.
  Set CONTROL to IR in the menu settings of your camcorder .
- When editing digital video, the operation signals cannot be sent with LANC.
- When you complete step 3, the image to adjust the syncronicity is recorded for about 50 seconds.
- If you start recording from the very beginning of the tape, the first few seconds of the tape may not record properly. Be sure to allow about 10 seconds' lead before starting the recording.

If you connect using an i.LINK cable (DV connecting cable)

With digital-to-digital connection, video and audio signals are transmitted in digital form for high-quality editing.

Operation 1: Making the program

(1) Insert the tape for playback into your camcorder, and insert a tape for recording into the VCR.
(2) Press MENU to display the menu.
(3) Turn the SEL/PUSH EXEC dial to select ETC, then press the dial.
(4) Turn the SEL/PUSH EXEC dial to select VIDEO EDIT, then press the dial.
(5) Search for the beginning of the first scene you want to insert using the video operation buttons, then pause playback.
(6) Press MARK on the Remote Commander, or the SEL/PUSH EXEC dial.
The IN point of the first program is set, and the top part of the program mark changes to light blue.
(7) Search for the end of the first scene you want to insert using the video operation buttons, then pause playback.
(8) Press MARK on the Remote Commander, or the SEL/PUSH EXEC dial.
The OUT point of the first program is set, then the bottom part of the program mark changes to light blue.
(9) Repeat steps 5 to 8, then set the program.
When the program is set, the program mark changes to light blue.
You can set maximum of 20 programs.

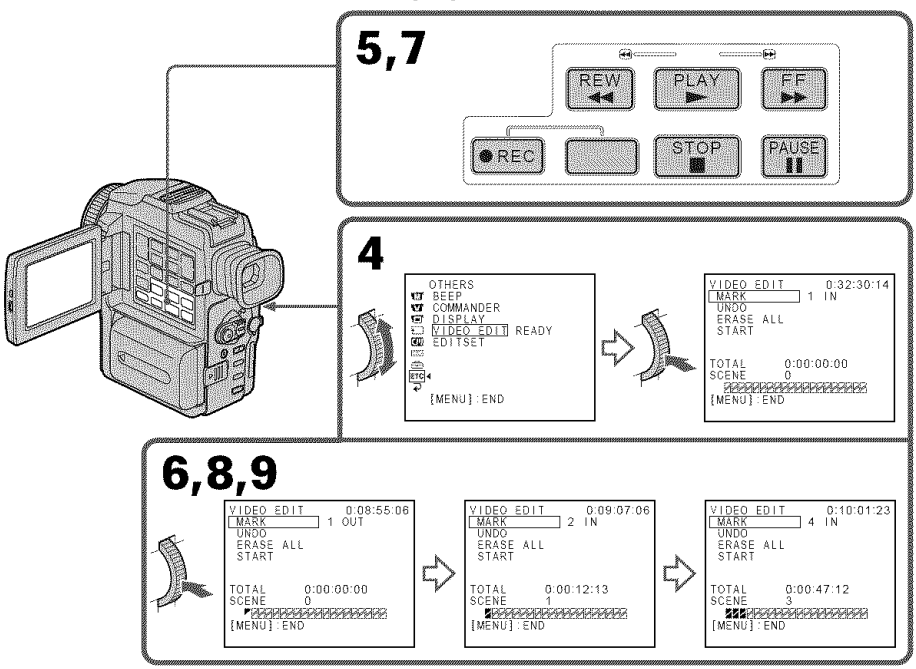

Erasing the program you have set

Erase OUT first and then IN from of the last program.
(1) Turn the SEL/PUSH EXEC dial to select UNDO, then press the dial.
(2) Turn the SEL/PUSH EXEC dial to select EXECUTE, then press the dial.
The last set program mark flashes, then the setting is cancelled.

To cancel erasing
Select RETURN in step 2.

Erasing all programs

(1) Select VIDEO EDIT in the menu settings. Turn the SEL/PUSH EXEC dial to select ERASE ALL, then press the dial.
(2) Turn the SEL/PUSH EXEC dial to select EXECUTE, then press the dial.
All the program marks flash, then the settings are cancelled.

To cancel erasing all programs
Select RETURN in step 2.

To cancel a program you have set
Press MENU.
The program is stored in memory until the tape is ejected.

Note
You cannot operate recording during the Digital program editing.

On a blank portion of the tape
You cannot set IN or OUT on a blank portion of the tape.

If there is a blank portion between IN and OUT on the tape
The total time code may not be displayed correctly.

Operation 2: Performing a Digital program editing (Dubbing a tape)

Make sure your camcorder and VCR are connected, and that the VCR is set to recording pause. When you use an i.LINK cable (DV connecting cable) the following procedure is not necessary.
When you use a digital video camera recorder, set its power switch to VCR/VTR.

(1) Select VIDEO EDIT. Turn the SEL/PUSH EXEC dial to select START, then press the dial.
(2) Turn the SEL/PUSH EXEC dial to select EXECUTE, then press the dial.
Search for the beginning of the first program, then start dubbing.
The program mark flashes.
The SEARCH indicator appears during search, and the EDIT indicator appears during edit on the LCD screen or in the viewfinder.
The PROGRAM indicator changes to light blue after dubbing is complete.
When the dubbing ends, your camcorder and the VCR automatically stop.

To stop dubbing during editting
Press ■ using the video operation buttons.

To end the Digital program editing function
Your camcorder stops when the dubbing is complete. Then the display returns to VIDEO EDIT in the menu settings.
Press MENU to end the program editing function.

You cannot record on the VCR when:
- The tape has run out.
- The write-protect tab is set to expose the red mark.
- The IR SETUP code is not correct. (When IR is selected.)
- The button to cancel recording pause is not correct. (When IR is selected.)

NOT READY appears on the LCD screen when:
- The program to operate the Digital program editing has not made.
- i.LINK is selected but an i.LINK cable (DV connecting cable) is not connected.
- The power of the connected VCR is not turned on. (when you set i.LINK.)

Using with analog video unit and personal computer – Signal convert function

You can capture images and sound from an analog video unit connected to a personal computer which has the i.LINK (DV) jack to your camcorder.

(1) Set the POWER switch to VCR.
(2) Set DISPLAY in ETC to LCD in the menu settings.
(3) Set A/V → DV OUT in TV to ON in the menu settings (p. 84).
(4) Start playback on the analog video unit.
(5) Start capturing procedures on your personal computer. The operation procedures depend on your personal computer and the software which you use.
For details on how to capture images, refer to the instruction manual of personal computer and software.

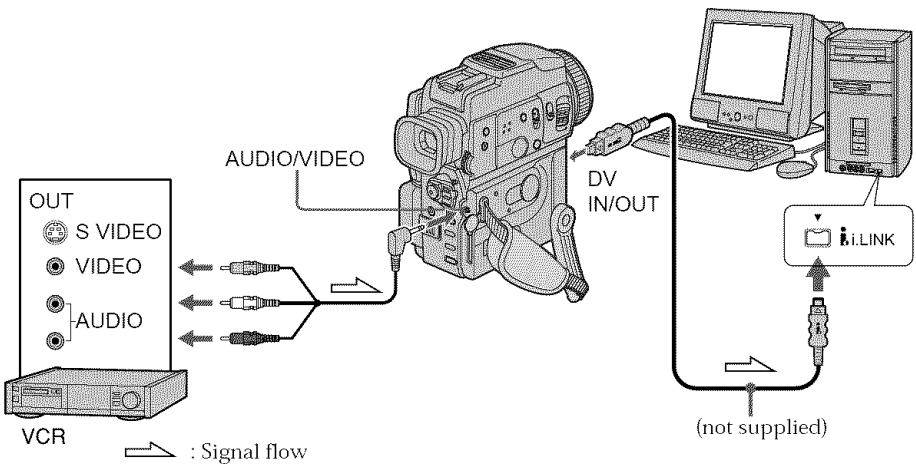

After capturing images and sound

Stop capturing procedures on your personal computer , and stop the playback on the analog video unit.

Notes

- You need to install software which can exchange video signals.
- Depending on the condition of the analog video signals, the personal computer may not be able to output the images correctly when you convert analog video signals into digital video signals via your camcorder. Depending on the analog video unit, the image may contain noise or incorrect colors.
- You cannot record or capture the video output via your camcorder when the video tapes includes copyright protection signals such as ID-2 system.

Recording video or TV programs

Using the A/V connecting cable

You can record a tape from another VCR or a TV program from a TV that has video/audio outputs. Use your camcorder as a recorder.

(1) Insert a blank tape (or a tape you want to record over) into your camcorder. If you are recording a tape from the VCR, insert a recorded tape into the VCR.
(2) Set the POWER switch to VCR on your camcorder.
(3) Set DISPLAY in ETC to LCD in the menu settings (p. 84).
(4) Press ● REC and the button on its right simultaneously on your camcorder, then immediately press ❚❚ on your camcorder.
(5) Press ► on the VCR to start playback if you record a tape from a VCR. Select a TV program if you record from a TV. The picture from a TV or VCR appears on the LCD screen or in the viewfinder.
(6) Press ❚❚ on your camcorder at the scene where you want to start recording from.

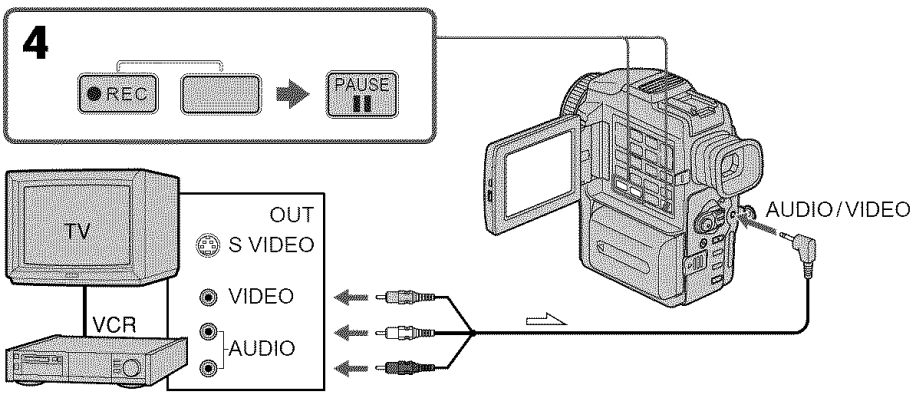

: Signal flow

When you have finished dubbing a tape

Press ■ on both your camcorder and the VCR.

Using the Remote Commander

In step 4, press ● REC and MARK simultaneously, then immediately press ❚❚. And in step 6, press ❚❚ at the scene where you want to start recording from.

Note on the Remote Commander

Your camcorder works in the commander mode VTR 2. Commander modes 1, 2 and 3 are used to distinguish your camcorder from other Sony VCRs to avoid remote control misoperation. If you use another Sony VCR in the commander mode VTR 2, we recommend changing the commander mode or covering the sensor of the VCR with black paper.

If your VCR is a monaural type

Connect the yellow plug of the A/V connecting cable to the video output jack and the white or the red plug to the audio output jack on the VCR or the TV. When the white plug is connected, the left channel audio is output, and the red plug is connected, the right channel audio is output.

If your TV or VCR has an S video jack

Connect using an S video cable (not supplied) to obtain high-quality pictures.
With this connection, you do not need to connect the yellow (video) plug of the A/V connecting cable.
Connect an S video cable (not supplied) to the S video jacks of both your camcorder and the TV or VCR.
This connection produces higher quality DV format pictures.

Using the i.LINK cable (DV connecting cable)

Simply connect the i.LINK cable (DV connecting cable) (not supplied) to DV IN/OUT and to DV IN/OUT of the DV products. With digital-to-digital connection, video and audio signals are transmitted in digital form for high-quality editing.

(1) Insert a blank tape (or a tape you want to record over) into your camcorder, and insert the recorded tape into the VCR.
(2) Set the POWER switch to VCR on your camcorder.
(3) Set DISPLAY in ETC to LCD in the menu settings (p. 84).
(4) Press ● REC and the button on its right simultaneously on your camcorder, then immediately press ❚❚ on your camcorder.
(5) Press ► on the VCR to start playback. The picture to be recorded appears on the LCD screen or in the viewfinder.
(6) Press ❚❚ on your camcorder at the scene where you want to start recording from.

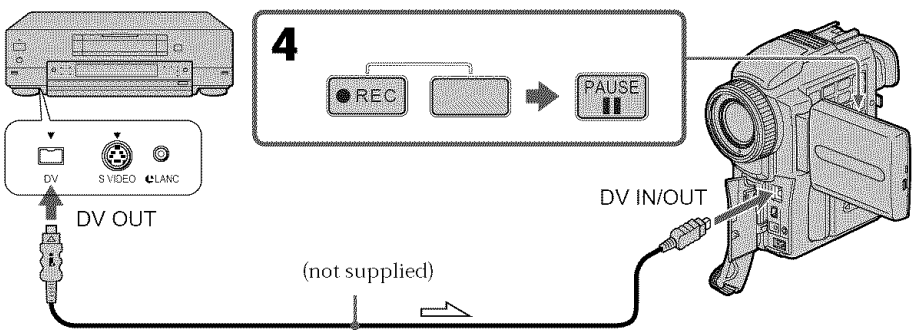

: Signal flow

When you have finished dubbing a tape

Press ■ on both your camcorder and the VCR.

Using the Remote Commander

In step 4, press ● REC and MARK simultaneously, then immediately press ❚❚. And in step 6, press ❚❚ at the scene where you want to start recording from.

Note on the Remote Commander

Your camcorder works in the commander mode VTR 2. Commander modes 1, 2 and 3 are used to distinguish your camcorder from other Sony VCRs to avoid remote control misoperation. If you use another Sony VCR in the commander mode VTR 2, we recommend changing the commander mode or covering the sensor of the VCR with black paper.

You can connect one VCR only using the i.LINK cable (DV connecting cable)

During digital editing

The color of the display may be uneven. However this does not affect the dubbed picture.

If you record playback pause picture with the DV IN/OUT jack

The recorded picture becomes rough. And when you play back the picture using your camcorder, the picture may jitter.

Before recording

Make sure if the DV IN indicator appears on the LCD screen or in the viewfinder. The DV IN indicator may appear on both equipment.

Inserting a scene from a VCR - Insert editing

You can insert a new scene from a VCR onto your originally recorded tape by specifying the insert start and end points. Use the Remote Commander for this operation. Connections are the same as on page 69 or 70.
Insert a cassette containing the desired scene to insert into the VCR.

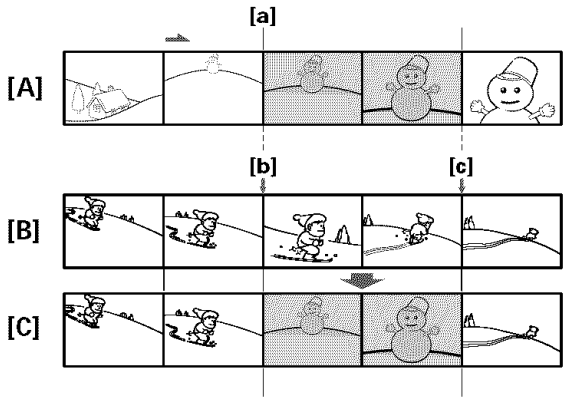

[A]: A tape that contains the scene to be superimposed
[B]: A tape before editing
[C]: A tape after editing

(1) Set the POWER switch to VCR on your camcorder.
(2) On the connected VCR, locate just before the insert start point **[a]**, then press ❚❚ to set the VCR to the playback pause mode.
(3) On your camcorder, locate the insert end point **[c]** by pressing ◀◀ or ▶▶. Then press ❚❚ to set it to the playback pause mode.
(4) Press ZERO SET MEMORY on the Remote Commander. The ZERO SET MEMORY indicator flashes and the end point of the insert is stored in memory. The tape counter shows "0:00:00."
(5) On your camcorder, locate the insert start point **[b]** by pressing ◀◀, then press ● REC and the button on its right simultaneously.
(6) First press ❚❚ on the VCR, and after a few seconds press ❚❚ on your camcorder to start inserting the new scene.
Inserting automatically stops near the zero point on the tape counter. Your camcorder automatically returns to the recording pause mode.

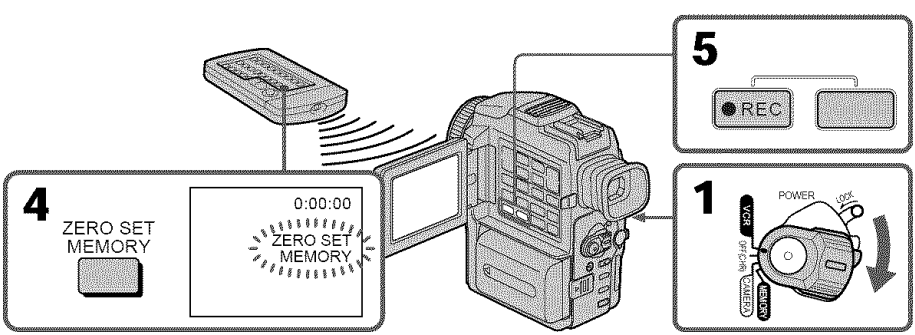

To change the insert end point

Press ZERO SET MEMORY again after step 5 to erase the ZERO SET MEMORY indicator and begin from step 3.

Using the Remote Commander

In step 5, press ●REC and MARK simultaneously, then immediately press ❚❚. And in step 6, press ❚❚ at the scene where you want to start recording from.

Note

The picture and sound recorded on the portion between the insert start and end points will be erased when you insert the new scene.

Note on the Remote Commander

Your camcorder works in the commander mode VTR 2. Commander modes 1, 2 and 3 are used to distinguish your camcorder from other Sony VCRs to avoid remote control misoperation. If you use another Sony VCR in the commander mode VTR 2, we recommend changing the commander mode or covering the sensor of the VCR with black paper.

If you insert scenes on the tape recorded with other camcorder (including other DCR-PC110)

The picture and sound may be distorted. We recommend that you insert scenes on a tape recorded with your camcorder.

When the inserted picture is played back

The picture and sound may be distorted at the end of the inserted portion. This is not a malfunction.
The picture and sound at the start point and the end point may be distorted in the LP mode.

To insert a scene without setting the insert end point

Skip steps 3 and 4. Press ■ when you want to stop inserting.

Audio dubbing

You can record an audio sound to add to the original sound on a tape by connecting audio equipment or a microphone. If you connect the audio equipment, you can add sound to your recorded tape by specifying starting and ending points. The original sound will not be erased.
Use the Remote Commander for this operation.

Connecting the microphone with the MIC jack

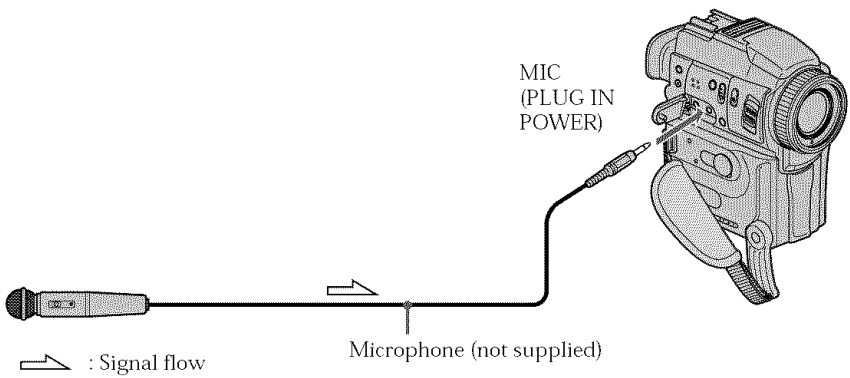

You can check the recorded picture and sound by connecting the AUDIO/VIDEO jack to a TV.
The recorded sound is not output from a speaker. Check the sound by using the TV or headphones.

Connecting the microphone with the intelligent accessory shoe

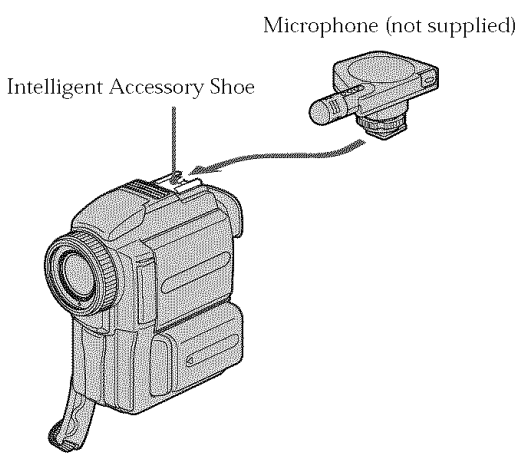

Connecting the A/V connecting cable to the AUDIO/VIDEO jack

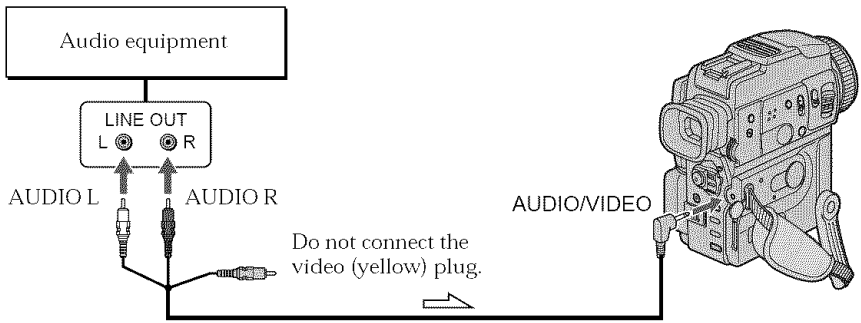

: Signal flow

Dubbing with the built-in microphone

No connection is necessary.

Note

When dubbing with the AUDIO/VIDEO jack or the built-in microphone, pictures are not output through S VIDEO jack or the AUDIO/VIDEO jack. Check the recorded picture on the LCD screen or in the viewfinder. You can check the recorded sound by using headphones.

If you make all the connections

The audio input to be recorded will take precedence over others in the following order.

- MIC (PLUG IN POWER) jack
- Intelligent accessory shoe
- AUDIO/VIDEO jack
- Built-in microphone

Adding an audio sound on a recorded tape

Choose a connection mentioned before, and connect audio equipment or microphone to your camcorder. Then follow the procedure below.

(1) Insert the recorded tape into your camcorder.
(2) Set the POWER switch to VCR on your camcorder.
(3) Locate the recording start point by pressing ► on the Remote Commander. Then press ❚❚ at the point where you want to start recording to set your camcorder to the playback pause mode.
(4) Press AUDIO DUB on the Remote Commander. The green ◓❚❚ indicator appears on the LCD screen or in the viewfinder.
(5) Press ❚❚ on the camcorder or on the Remote Commander and start playing back the audio you want to record at the same time.
The new sound is recorded in stereo 2 (ST2) during playback. During recording new sound, the red ◓ appears on the LCD screen or in the viewfinder.
(6) Press ■ on the Remote Commander or on your camcorder at the point where you want to stop recording.

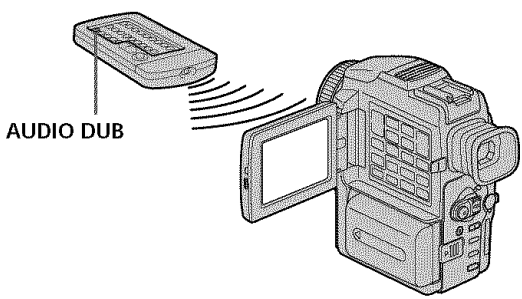

Monitoring the new recorded sound

To play back the sound

Adjust the balance between the original sound (ST1) and the new sound (ST2) by selecting AUDIO MIX in the menu settings (p. 84).

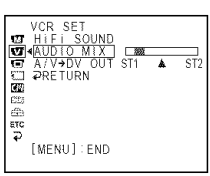

Five minutes after when you disconnect the power source or remove the battery pack, the setting of AUDIO MIX returns to the original sound (ST1) only. The default setting is original sound only.

Notes

- New sound cannot be recorded on a tape already recorded in the 16-bit mode (32 kHz, 44.1 kHz or 48 kHz) (p. 89).
- New sound cannot be recorded on a tape already recorded in the LP mode (p. 89).
- You cannot add audio with the DV IN/OUT jack.
- You cannot add audio on the blank portion of the tape.

If an i.LINK cable (DV connecting cable) (not supplied) is connected to your camcorder

You cannot add a sound to a recorded tape.

We recommend that you add new sound on a tape recorded with your camcorder

If you add new sound on a tape recorded with another camcorder (including other DCR-PC110), the sound quality may become worse.

If you set the write-protect tab of the tape to lock

You cannot record on a tape. Slide the write-protect tab to release the write protection.

To add new sound more precisely

Press ZERO SET MEMORY on the Remote Commander at the point where you want to stop recording later in the playback mode.
Carry out steps 3 to 5. Recording automatically stops at the point where ZERO SET MEMORY was pressed.

Superimposing a title

CM only

If you use a tape with cassette memory, you can superimpose the title. When you play back the tape, the title is displayed for 5 seconds from the point where you superimposed it.

You can select one of 8 preset titles and 2 custom titles (p. 80). You can also select the color, size and position of titles.

(1) In CAMERA, playback pause or playback mode, press TITLE to display the title menu.
(2) Turn the SEL/PUSH EXEC dial to select [□], then press the dial.
(3) Turn the SEL/PUSH EXEC dial to select the desired title, then press the dial. The title is flashing.
(4) Change the color, size, or position, if necessary.
① Turn the SEL/PUSH EXEC dial to select the COLOR, SIZE or POSITION, then press the dial. The item appears.
② Turn the SEL/PUSH EXEC dial to select the desired item, then press the dial.
③ Repeat steps ① and ② until the title is laid out as desired.
(5) Press the SEL/PUSH EXEC dial again to complete the setting.
In the recording, playback or playback pause mode:
The TITLE SAVE indicator appears on the screen for 5 seconds and the title is set.
In the standby mode:
The TITLE indicator appears. And when you press START/STOP to start recording, TITLE SAVE appears on the screen for 5 seconds and the title is set.

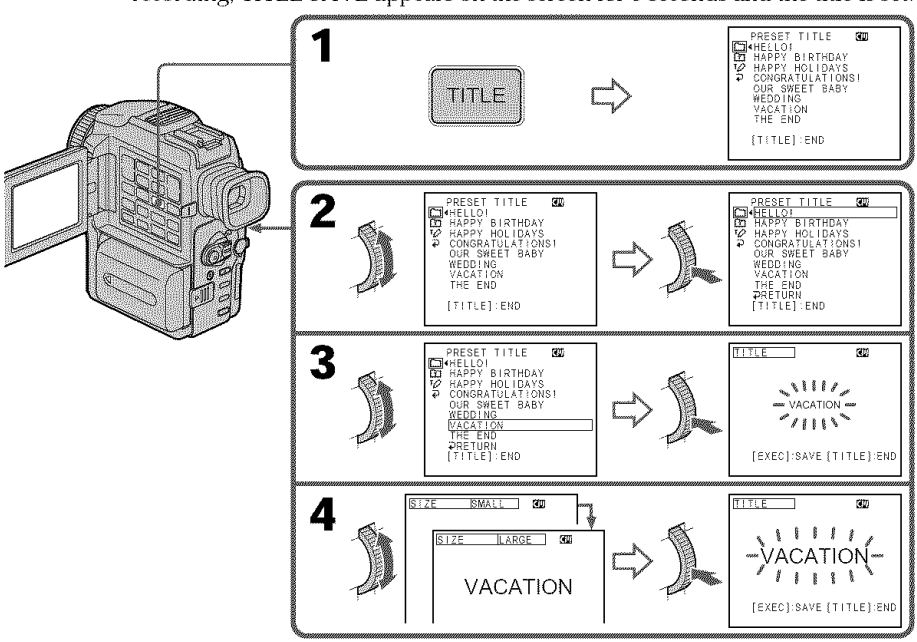

Editing

If you set the write-protect tab of the tape to lock
You cannot superimpose or erase the title. Slide the write-protect tab to release the write protection.

To use the custom title
If you want to use the custom title, select [T] in step 2.

If the tape has a blank portion
You cannot superimpose a title on the portion.

If the tape has a blank portion in the middle of the recorded parts
The title may not be displayed correctly.

The titles superimposed with your camcorder
- They are displayed by only the DV Mini DV format video equipment with index titler function.
- The point you superimposed the title may be detected as an index signal when searching a recording with other video equipment.

If the tape has too many index signals
You may not be able to superimpose a title because the memory is full. In this case, delete data you do not need.

Not to display titles
Set TITLE DSPL to OFF in the menu settings (p. 84).

Title setting
- The title color changes as follows:
  WHITE ⟷ YELLOW ⟷ VIOLET ⟷ RED ⟷ CYAN ⟷ GREEN ⟷ BLUE
- The title size changes as follows:
  SMALL ⟷ LARGE
  You cannot input 13 characters or more in LARGE size. If you input more than 12 characters, the title size returns to SMALL even you select LARGE.
- If you select SMALL, you have nine choices for the title position.
  If you select LARGE, you have eight choices for the title position.

One cassette can have up to about 20 titles, if 1 title consists of 5 characters
However, if the cassette memory is full with date, photo and cassette label data, one cassette can have only up to about 11 titles with 5 characters each.
Cassette memory capacity is as follows:
– 6 date data
– 12 photo data
– 1 cassette label

If the "CM FULL" mark appears
The cassette memory is full. Erase the title you do not need.

Erasing a title

(1) Set the POWER switch to VCR.
(2) Press MENU to display the menu.
(3) Turn the SEL/PUSH EXEC dial to select CM, then press the dial.
(4) Turn the SEL/PUSH EXEC dial to select TITLEERASE, then press the dial.
Title erase display appears.
(5) Turn the SEL/PUSH EXEC dial to select the title you want to erase, then press the dial.
"ERASE OK ?" indicator appears.
(6) Make sure the title is the one you want to erase, and turn the SEL/PUSH EXEC dial to select OK, then press the dial.

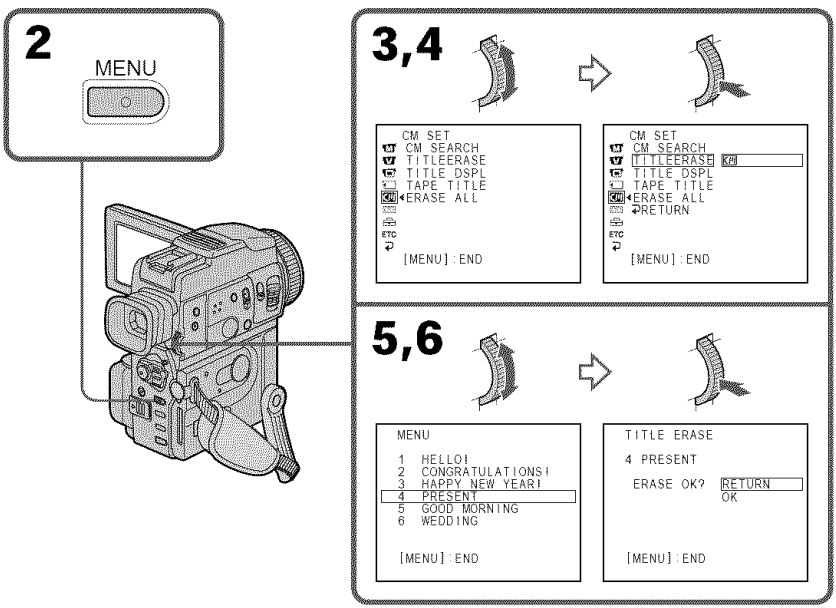

To cancel erasing a title

Select RETURN in step 6.

Making your own titles

CM only

You can make up to 2 titles and store them in cassette memory. Each title can have up to 20 characters.

(1) Press TITLE in the standby or VCR mode.
(2) Turn the SEL/PUSH EXEC dial to select [T/✎], then press the dial.
(3) Turn the SEL/PUSH EXEC dial to select the first line (CUSTOM1 SET) or second line (CUSTOM2 SET), then press the dial.
(4) Turn the SEL/PUSH EXEC dial to select the column of the desired character, then press the dial.
(5) Turn the SEL/PUSH EXEC dial to select the desired character, then press the dial.
(6) Repeat steps 4 and 5 until you have selected all characters and completed the title.
(7) To finish making your own titles, turn the SEL/PUSH EXEC dial to select [SET], then press the dial.
(8) Press TITLE to make the title menu disappear.

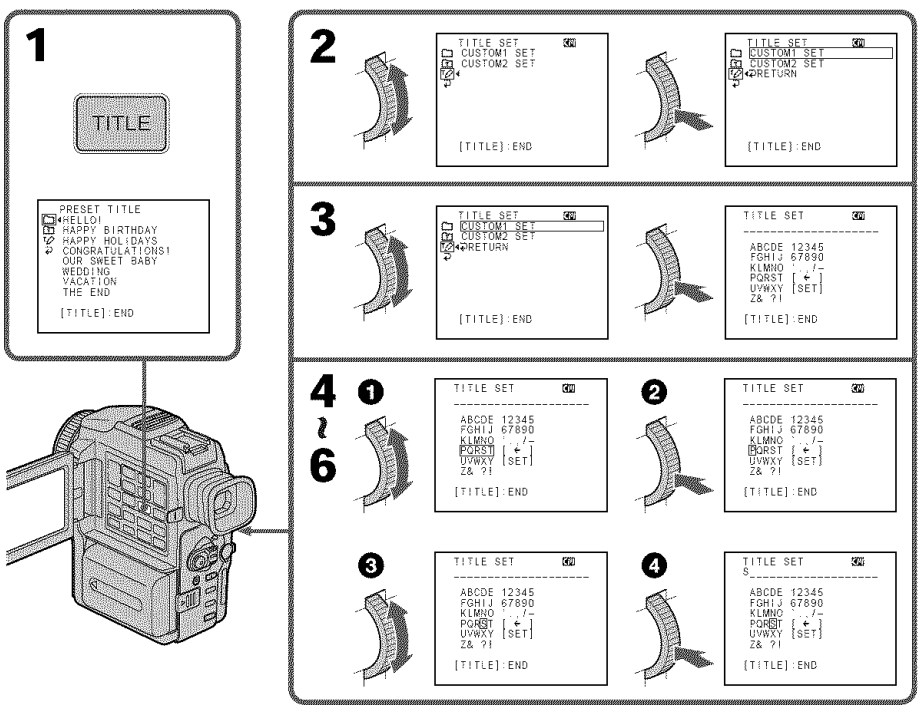

To change a title you have stored

In step 3, select CUSTOM1 SET or CUSTOM2 SET, depending on which title you want to change, then press the SEL/PUSH EXEC dial. Turn the SEL/PUSH EXEC dial to select [←], then press the dial to delete the title. The last character is erased. Enter the new title as desired.

If you take 5 minutes or longer to enter characters in the standby mode while a cassette is in your camcorder

The power automatically goes off. The characters you have entered remain stored in memory. Set the POWER switch to OFF (CHG) once and then to CAMERA again, then proceed from step 1.
We recommend setting the POWER switch to VCR or removing the cassette so that your camcorder does not automatically turn off while you are entering title characters.

To delete the title

Select [←]. The last character is erased.

To enter a space

Select [Z& ? !], then select the blank part.

Labeling a cassette

CM only

If you use a tape with cassette memory, you can label a cassette. The label can consist of up to 10 characters and is stored in cassette memory. When you insert the labelled cassette and turn the power on, the label is displayed for about 5 seconds.

(1) Insert the cassette you want to label.
(2) Set the POWER switch to VCR.
(3) Press MENU to display the menu.
(4) Turn the SEL/PUSH EXEC dial to select CM, then press the dial.
(5) Turn the SEL/PUSH EXEC dial to select TAPE TITLE, then press the dial. Tape title display appears.
(6) Turn the SEL/PUSH EXEC dial to select the column of the desired character, then press the dial.
(7) Turn the SEL/PUSH EXEC dial to select the desired character, then press the dial.
(8) Repeat steps 6 and 7 until you finish the label.
(9) Turn the SEL/PUSH EXEC dial to select [SET], then press the dial.
The label is stored in memory.

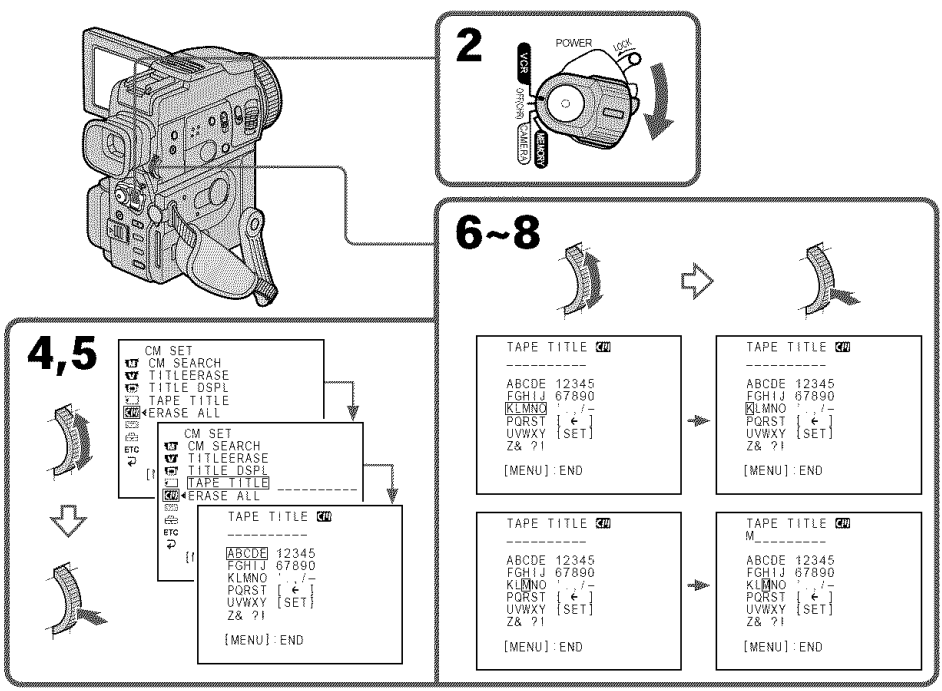

To erase the label you have made

In step 6 turn the SEL/PUSH EXEC dial to select [←], then press the dial. The last character is erased.

To change the label you have made

Insert the cassette to change the label, and operate in the same way to make a new label.

If you set the write-protect tab of the tape to lock

You cannot label the tape. Slide the write-protect tab to release the write protection.

If the tape has too many index signals

You may not be able to label a cassette because the memory is full. In this case, delete data you do not need.

If you have superimposed titles in the cassette

When the label is displayed, up to 4 titles also appear.

When the "-----" indicator has fewer than 10 spaces

The cassette memory is full.
The "-----" indicates the number of characters you can select for the label.

To erase a character

Select [←]. The last character is erased.

To enter a space

Select [Z& ? !], then select the blank part.

Changing the menu settings

To change the mode settings in the menu settings, select the menu items with the SEL/PUSH EXEC dial. The default settings can be partially changed. First, select the icon, then the menu item and then the mode.

(1) In the standby, MEMORY or VCR mode, press MENU.

(2) Turn the SEL/PUSH EXEC dial to select the desired icon, then press the dial to set.

(3) Turn the SEL/PUSH EXEC dial to select the desired item, then press the dial to set.

(4) Turn the SEL/PUSH EXEC dial to select the desired mode, then press the dial to set.

(5) If you want to change other items, select ⮐ RETURN and press the dial, then repeat steps 2 to 4.

For details, see "Selecting the mode setting of each item" (p. 85).

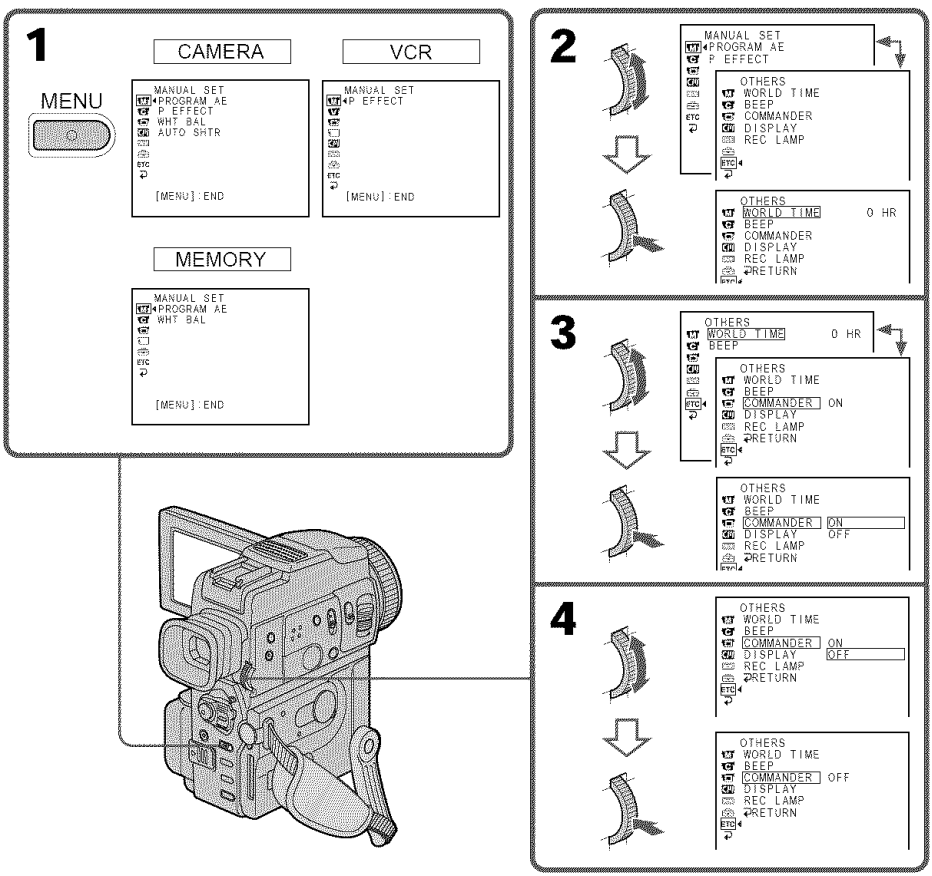

To make the menu display disappear

Press MENU.

Menu items are displayed as the following icons:

- MANUAL SET
- CAMERA SET
- VCR SET
- LCD/VF SET
- MEMORY SET
- CM SET
- TAPE SET
- SETUP MENU
- OTHERS

Selecting the mode setting of each item

● is the default setting.

Menu items differ depending on the position of the POWER switch. The LCD screen and the viewfinder shows only the items you can operate at the moment.

Icon/item	Mode	Meaning	POWER switch
PROGRAM AE	——	To suit your specific shooting requirement (p. 42)	CAMERA MEMORY
P EFFECT	——	To add special effects like those in films or on the TV to images (p. 38).	CAMERA VCR
WHT BAL	——	To adjust the white balance (p. 34).	CAMERA MEMORY
AUTO SHTR	● ON	To automatically activate the electronic shutter when shooting in bright conditions.	CAMERA
	OFF	To not automatically activate the electronic shutter even when shooting in bright conditions.	
D ZOOM	● OFF	To deactivate the digital zoom. Up to 10× zoom is carried out.	CAMERA
	20×	To activate the digital zoom. More than 10× to 20× zoom is performed digitally (p. 19).	
	120×	To activate the digital zoom. More than 10× to 120× zoom is performed digitally (p. 19).	
16:9WIDE	● OFF	—	CAMERA
	ON	To record a 16:9 wide picture (p. 35).	
STEADYSHOT	● ON	To compensate for camera-shake.	CAMERA
	OFF	To cancel the SteadyShot function. Natural pictures are produced when shooting a stationary object with a tripod.	
N.S. LIGHT	● ON	To use the NightShot Light function (p. 21).	CAMERA MEMORY
	OFF	To cancel the NightShot Light function.	
FLASH LVL	HIGH	Makes the flash level higher than normal.	CAMERA MEMORY
	● NORMAL	Normal setting.	
	LOW	Makes the flash level lower than normal.	

Notes on the SteadyShot function

- The SteadyShot function will not correct excessive camera-shake.
- Attachment of a conversion lens (not supplied) may influence the SteadyShot function.

If you cancel the SteadyShot function

The SteadyShot off indicator appears. Your camcorder prevents excessive compensation for camera-shake.

When using an external flash (not supplied)

You cannot adjust FLASH LVL if the external flash (not supplied) is not compartible with the flash level.

Icon/item	Mode	Meaning	POWER switch
HiFi SOUND	● STEREO	To play back a stereo tape or dual sound track tape with main and sub sound (p. 139).	VCR
	1	To play back a stereo tape with the left sound or a dual sound tape with main sound.	
	2	To play back a stereo tape with the right sound or a dual sound track tape with sub sound.	
AUDIO MIX	——	To adjust the balance between the stereo 1 and stereo 2 (p. 75). ST1 ▲ ST2	VCR
A/V→DV OUT	● OFF	To output digital images and sound in analog format using your camcorder.	VCR
	ON	To output analog images and sound in digital format using your camcorder. (p. 68)	
LCD BRIGHT		To adjust the brightness on the LCD screen with the SEL/PUSH EXEC dial. To darken ⟷ To lighten	VCR CAMERA MEMORY
LCD B. L.	● BRT NORMAL	To set the brightness on the LCD screen normal.	VCR CAMERA MEMORY
	BRIGHT	To brighten the LCD screen.	
LCD COLOR	——	To adjust the color on the LCD screen, turn and press the SEL/PUSH EXEC dial. To get low-intensity ⟷ To get high-intensity	VCR CAMERA MEMORY
VF BRIGHT		To adjust the brightness on the viewfinder screen, turn and press the SEL/PUSH EXEC dial. To darken ⟷ To lighten	VCR CAMERA MEMORY

Notes on LCD B.L.

- When you select BRIGHT, battery life is reduced by about 10 percent during recording.
- When you use power sources other than the battery pack, BRIGHT is automatically selected.

Icon/item	Mode	Meaning	POWER switch
STILL SET			
PIC MODE	● SINGLE	Not to record continuously.	MEMORY
	CONTINUOUS	To record continuously (p. 103).	
	MULTI SCRN	To record 9 images continuously (p. 103).	
QUALITY	● SUPER FINE	To record still images in the finest image quality mode.	VCR MEMORY
	FINE	To record still images in the fine image quality mode.	
	STANDARD	To record still images in the standard image quality mode.	
IMAGESIZE	● 1152 × 864	To record still images in 1152 × 864 size.	MEMORY
	640 × 480	To record still images in 640 × 480 size.	
MOVIE SET			
IMAGESIZE	● 320 × 240	To record moving pictures in 320 × 240 size.	VCR MEMORY
	160 × 112	To record moving pictures in 160 × 112 size.	
REMAIN	● AUTO	To display the remaining capacity of the "Memory Stick" in the following cases: • For 5 seconds after setting the POWER switch to MEMORY • For 5 seconds after inserting a "Memory Stick" into your camcorder in MEMORY or VCR mode • When the capacity of the "Memory Stick" is less than 1 minute in MEMORY mode • For 5 seconds after completing a moving picture recording	VCR MEMORY
	ON	To always display the remaining capacity of the "Memory Stick"	

Note on IMAGESIZE

If you set PIC MODE to MULTI SCRN or you set the POWER switch to VCR, IMAGESIZE is automatically set to 640 × 480.

Icon/item	Mode	Meaning	POWER switch
PRINT MARK	● OFF	To cancel print marks on still images.	VCR MEMORY
	ON	To write a print mark on the recorded still images you want to print out later.	
PROTECT	● OFF	Not to protect images.	VCR MEMORY
	ON	To protect selected images against accidental erasure (p. 134).	
SLIDE SHOW	——	To play back images in a continuous loop (p. 133).	MEMORY
DELETE ALL	——	To delete all the unprotected images (p. 136).	MEMORY
FORMAT	● RETURN	To cancel formatting.	MEMORY
	OK	To format an inserted "Memory Stick." 1. Select FORMAT with the SEL/PUSH EXEC dial, then press the dial. 2. Turn the SEL/PUSH EXEC dial to select OK, then press the dial. 3. After "EXECUTE" appears, press the SEL/PUSH EXEC dial. "FORMATTING" flashes during formatting. "COMPLETE" appears when formatting is finished.	
PHOTO SAVE	——	To duplicate still images on mini DV tape onto "Memory Stick"(p. 118).	VCR
CM SEARCH	● ON	To search using cassette memory (p. 51).	VCR
	OFF	To search without using cassette memory.	
TITLEERASE	——	To erase the title you have superimposed (p. 79).	VCR CAMERA
TITLE DSPL	● ON	To display the title you have superimposed.	VCR
	OFF	Not to display the title.	
TAPE TITLE	——	To label a cassette (p. 82).	VCR CAMERA
ERASE ALL	——	To erase all the data in cassette memory.	VCR CAMERA

Notes on formatting

- Supplied "Memory Stick"s have been formatted at factory. Formatting with this camcorder is not required.
- Do not turn the POWER switch or press any button while the display shows "FORMATTING. "
- You cannot format the "Memory Stick" if the write-protect tab on the "Memory Stick" is set to LOCK.
- Format the "Memory Stick" when "FORMAT ERROR" is displayed.

Formatting erases all information on the "Memory Stick"

Check the contents of the "Memory Stick" before formatting.

- Formatting erases sample images on the "Memory Stick."
- Formatting erases the protected image data on the "Memory Stick."

Icon/item	Mode	Meaning	POWER switch
REC MODE	● SP	To record in the SP (Standard Play) mode.	VCR CAMERA
	LP	To increase the recording time to 1.5 times the SP mode.	
AUDIO MODE	● 12BIT	To record in the 12-bit mode (2 stereo sounds).	VCR CAMERA
	16BIT	To record in the 16-bit mode (1 stereo sound with high quality).	
REMAIN	● AUTO	To display the remaining tape bar: • for about 8 seconds after your camcorder is turned on and calculates the remaining amount of tape. • for about 8 seconds after a cassette is inserted and your camcorder calculates the remaining amount of tape. • for about 8 seconds after ► is pressed in VCR mode. • for about 8 seconds after DISPLAY is pressed to display the screen indicators. • for the period of tape rewinding, forwarding or picture search in the VCR mode.	VCR CAMERA
	ON	To always display the remaining tape indicator.	
DATA CODE	● DATE/CAM	To display date, time and various settings during playback.	VCR
	DATE	To display date and time during playback.	

Notes on the LP mode

- When you record a tape in the LP mode on your camcorder, we recommend playing the tape on your camcorder. When you play back the tape on other camcorders or VCRs, noise may occur in pictures or sound.
- When you record in the LP mode, we recommend using a Sony Excellence/Master mini DV cassette so that you can get the most out of your camcorder.
- You cannot make audio dubbing on a tape recorded in the LP mode. Use the SP mode for the tape to be audio dubbed.
- When you record in the SP and LP modes on one tape or you record some scenes in the LP mode, the playback picture may be distorted or the time code may not be written properly between scenes.

Notes on AUDIO MODE

- You cannot dub audio sound on a tape recorded in the 16-bit mode.
- When playing back a tape recorded in the 16-bit mode, you cannot adjust the balance in AUDIO MIX.

Icon/item	Mode	Meaning	POWER switch
CLOCK SET	——	To reset the date or time (p. 92).	CAMERA MEMORY
AUTO TV ON	● OFF	—	VCR CAMERA MEMORY
	ON	To automatically turn on a Sony TV when using the laser link function (P. 28).	
TV INPUT	● VIDEO1 VIDEO2 VIDEO3	To switch the video input on a Sony TV when using the laser link function (P. 28).	VCR CAMERA MEMORY
	OFF	—	
LTR SIZE	● NORMAL	To display selected menu items in normal size.	VCR CAMERA MEMORY
	2×	To display selected menu items at twice the normal size.	
DEMO MODE	● ON	To make the demonstration appear.	CAMERA
	OFF	To cancel the demonstration mode.	

Notes on DEMO MODE

- You cannot select DEMO MODE when a cassette is inserted in your camcorder.
- DEMO MODE is set to STBY (Standby) as the default setting and the demonstration starts about 10 minutes after you have set the POWER switch to CAMERA without a cassette inserted.
  Note that you cannot select STBY of DEMO MODE in the menu settings.
- When NIGHTSHOT is set to ON, the "NIGHTSHOT" indicator appears on the LCD screen or in the viewfinder and you cannot select DEMO MODE in the menu settings.

Icon/item	Mode	Meaning	POWER switch
ETC WORLD TIME	——	To set the clock to the local time. Turn the SEL/PUSH EXEC dial to set a time difference. The clock changes by the time difference you set here. If you set the time difference to 0, the clock returns to the originally set time.	CAMERA MEMORY
BEEP	● MELODY	To output the melody when you start/stop recording or when an unusual condition occurs on your camcorder.	VCR CAMERA MEMORY
	NORMAL	To output the beep instead of the melody.	
	OFF	To cancel all sound including shutter sound.	
COMMANDER	● ON	To activate the Remote Commander supplied with your camcorder.	VCR CAMERA MEMORY
	OFF	To deactivate the Remote Commander to avoid remote control misoperation caused by other VCR's remote control.	
DISPLAY	● LCD	To show the display on the LCD screen and in the viewfinder.	VCR CAMERA MEMORY
	V-OUT/LCD	To show the display on the TV screen, LCD screen and in the viewfinder.	
REC LAMP	● ON	To light up the camera recording lamp at the front of your camcorder.	CAMERA MEMORY
	OFF	To turn the camera recording lamp off so that the person is not aware of the recording.	
VIDEO EDIT	——	To make program and perform video editing (p. 66).	VCR
EDIT SET	——	To adjust and set the synchronicity of your camcorder and a VCR for dubbing in edit set mode (p. 59).	VCR

Note

If you press DISPLAY with DISPLAY set to V-OUT/LCD in the menu settings, the picture from a TV or VCR will not appear on the LCD screen even when your camcorder is connected to outputs on the TV or VCR.

When recording a close subject

When REC LAMP is set to ON, the red camera recording lamp on the front of the camcorder may reflect on the subject if it is close. In this case, we recommend you set REC LAMP to OFF.

In more than 5 minutes after removing the power source

The PROGRAM AE, WHT BAL, FLASH LVL, HiFi SOUND, AUDIO MIX and COMMANDER items are returned to their default settings.
The other menu items are held in memory even when the battery is removed.

Resetting the date and time

The default clock setting is set to Tokyo time for the models sold in Japan, and New York time for other models.
If you do not use your camcorder for about 3 months, the date and time settings may be released (bars may appear) because the manganese-lithium battery installed in your camcorder will have been discharged (p. 153).
First, set the year, then the month, the day, the hour and then the minute.

(1) In the standby mode, press MENU to display the menu.
(2) Turn the SEL/PUSH EXEC dial to select [icon], then press the dial.
(3) Turn the SEL/PUSH EXEC dial to select CLOCK SET, then press the dial.
(4) Turn the SEL/PUSH EXEC dial to adjust the desired year, then press the dial.
(5) Set the month, day and hour by turning the SEL/PUSH EXEC dial and pressing the dial.
(6) Set the minute by turning the SEL/PUSH EXEC dial and pressing the dial by the time signal. The clock starts to move.
(7) Press MENU to make the menu settings disappear.

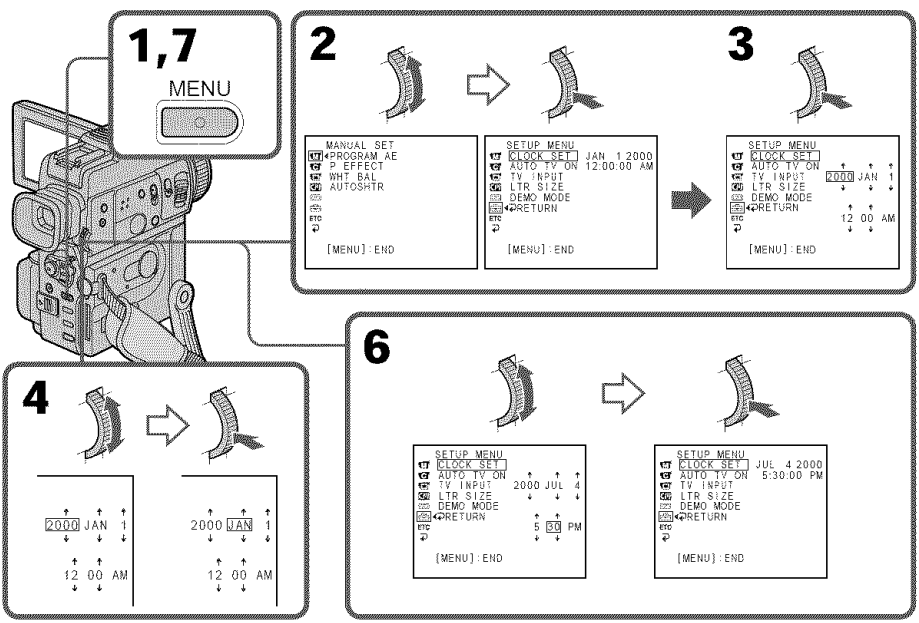

The year changes as follows:

1995 ⟷ 2000 ← · · · · → 2079

If you do not set the date and time

"– –:– –:– –" is recorded on the data code of the tape and the "Memory Stick."

Note on the time indicator

The internal clock of your camcorder operates on a 12-hour cycle.
• 12:00 AM stands for midnight.
• 12:00 PM stands for noon.

Using a "Memory Stick" - introduction

You can record and play back images on a "Memory Stick" supplied with your camcorder. You can easily play back, record or delete images. You can exchange image data with other equipment such as a personal computer etc., using the USB cable for "Memory Stick" supplied with your camcorder.

On file format

Still image (JPEG)

Your camcorder compresses image data in JPEG format (extension .jpg).

Moving picture (MPEG)

Your camcorder compresses picture data in MPEG format (extension .mpg).

Typical image data file name

Still image

100-0001: This file name appears on the LCD screen or in the viewfinder of your camcorder.

Dsc00001.jpg: This file name appears on the display of your personal computer.

Moving picture

MOV00001: This file name appears on the LCD screen or in the viewfinder of your camcorder.

Mov00001.mpg: This file name appears on the display of your personal computer.

Using a "Memory Stick"

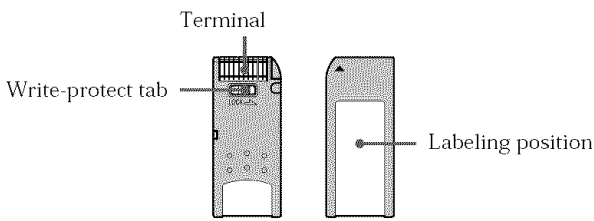

- You cannot record or erase images when the write-protect tab on the "Memory Stick" is set to LOCK.
- We recommend backing up important data.
- Image data may be damaged in the following cases:
  - If you remove the "Memory Stick" or turn the power off while reading or writing.
  - If you use "Memory Stick"s near static electricity or magnetic fields.
- Prevent metallic objects or your finger from coming into contact with the metal parts of the connecting section.
- Stick its label on the labeling position.
- Do not bend, drop or apply strong shock to "Memory Stick"s.
- Do not disassemble or modify "Memory Stick"s.
- Do not let "Memory Stick"s get wet.
- Do not use or keep "Memory Stick"s in locations that are:
  - Extremely hot such as in a car parked in the sun or under the scorching sun.
  - Under direct sunlight.
  - Very humid or subject to corrosive gases.
- When you carry or store a "Memory Stick," put it in its case.

"Memory Stick"s formatted by a computer

"Memory Stick"s formatted by Windows OS or Macintosh computers do not have a guaranteed compatibility with this camcorder.

Notes on image data compatibility

- Image data files recorded on "Memory Stick"s by your camcorder conform with the Design Rules for Camera File Systems universal standard established by the JEIDA (Japan Electronic Industry Development Association). You cannot play back on your camcorder still images recorded on other equipment (DCR-TRV890E/TRV900/TRV900E or DSC-D700/D770) that does not conform with this universal standard. (These models are not sold in some areas.)
- If you cannot use the "Memory Stick" that is used with other equipment, format it with this camcorder (p. 88). However, formatting erases all information on the "Memory Stick."

"Memory Stick" and MEMORY STICK are trademarks of Sony Corporation.

- Windows and ActiveMovie, DirectShow are either registered trademarks or trademarks of Microsoft Corporation in the United States and/or other countries.
- Macintosh and Mac OS, QuickTime are trademarks of Apple Computer, Inc.
- All other product names mentioned herein may be the trademarks or registered trademarks of their respective companies.
- Furthermore, "™" and "®" are not mentioned in each case in this manual.

Inserting a "Memory Stick"

Insert a "Memory Stick" in the "Memory Stick" slot as far as it can go with the ▲ mark facing up as illustrated.

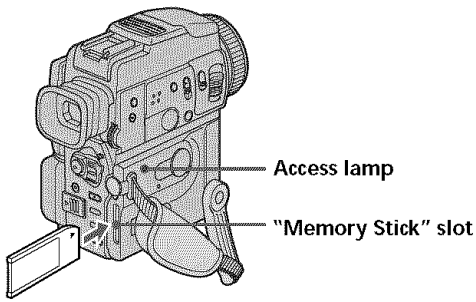

Ejecting a "Memory Stick"

Slide MEMORY RELEASE in the direction of the arrow.

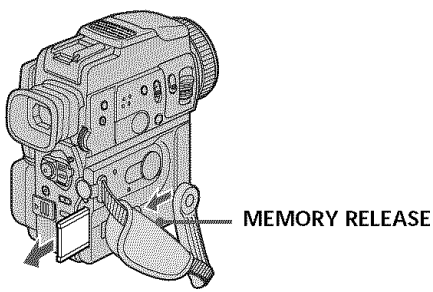

While the access lamp is lit or flashing
Do not shake or strike your camcorder because your camcorder is reading the data from the "Memory Stick" or recording the data on the "Memory Stick." Do not turn the power off , eject a "Memory Stick" or remove the battery pack. Otherwise, the image data breakdown may occur.

If "MEMORYSTICK ERROR" is displayed
The "Memory Stick" is corrupted. If this occurs, use another "Memory Stick."

Selecting still image quality mode

You can select image quality mode in still image recording. The default setting is SUPER FINE.

(1) Set the POWER switch to MEMORY or VCR. Make sure that the LOCK switch is set to the right (unlock) position.
(2) Press MENU to display the menu.
(3) Turn the SEL/PUSH EXEC dial to select , then press the dial.
(4) Turn the SEL/PUSH EXEC dial to select STILL SET, then press the dial.
(5) Turn the SEL/PUSH EXEC dial to select QUALITY, then press the dial.
(6) Turn the SEL/PUSH EXEC dial to select the desired image quality, then press the dial.

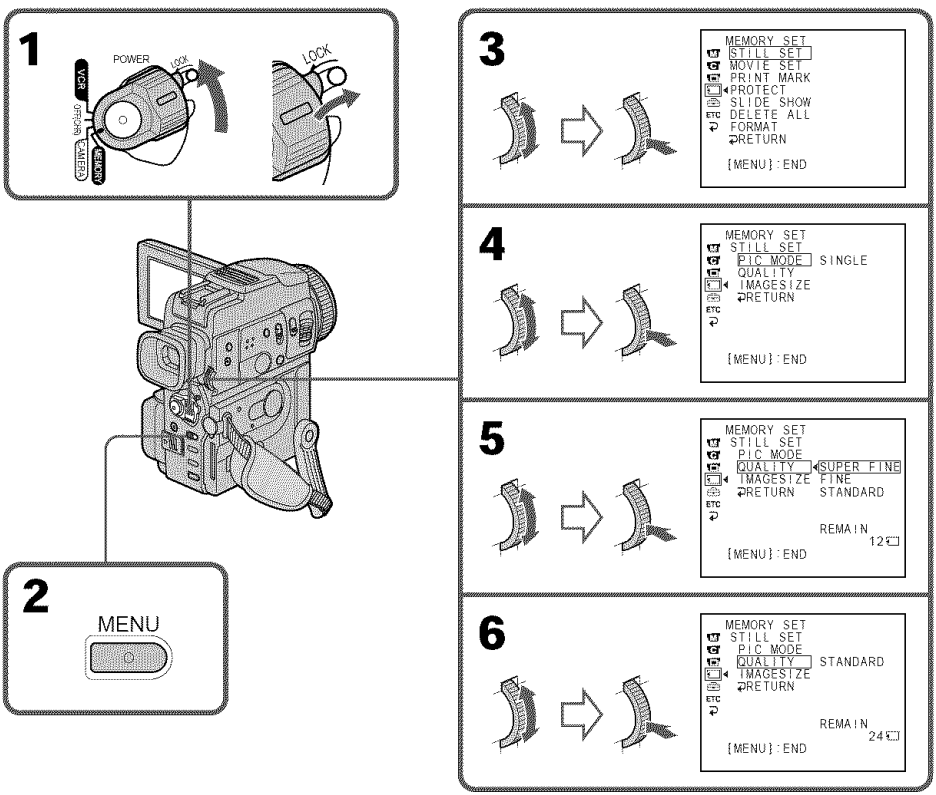

Image quality settings

Setting	Meaning
SUPER FINE (SFN)	This is the highest image quality in your camcorder. The number of still images you can record is less than in FINE mode. The image is compressed to about 1/3.
FINE (FINE)	Use this mode when you want to record high quality images. The image is compressed to about 1/6.
STANDARD (STD)	This is the standard image quality. The image is compressed to about 1/10.

Note
In some cases, changing the image quality mode may not affect the image quality, depending on the types of images you are shooting.

Differences in image quality mode

Recorded images are compressed in JPEG format before being stored in memory. The memory capacity allotted to each image varies depending on the selected image quality mode and image size. Details are shown in the table below. (You can select 1152 × 864 or 640 × 480 image size in the menu settings.)

1152 × 864 image size

Image quality mode	Memory capacity
SUPER FINE	About 600 KB
FINE	About 300 KB
STANDARD	About 200 KB

640 × 480 image size

Image quality mode	Memory capacity
SUPER FINE	About 190 KB
FINE	About 100 KB
STANDARD	About 60 KB

Image quality mode indicator

The image quality mode indicator is not displayed during playback.

Selecting the image size

You can select either one of two image sizes

Still images: 1152 × 864 or 640 × 480. (The image size in VCR mode is automatically set to 640 × 480.)
The default setting is 1152 × 864.

Moving pictures: 320 × 240 or 160 × 112
The default setting is 320 × 240.

(1) Set the POWER switch to MEMORY. Make sure that the LOCK switch is set to the right (unlock) position.
(2) Press MENU to display the menu.
(3) Turn the SEL/PUSH EXEC dial to select , then press the dial.
(4) Turn the SEL/PUSH EXEC dial to select STILL SET (still image) or MOVIE SET (moving picture), then press the dial.
(5) Turn the SEL/PUSH EXEC dial to select IMAGESIZE, then press the dial.
(6) Turn the SEL/PUSH EXEC dial to select the desired image size, then press the dial.
The indicator changes as follows:

Still images: 1152 ⟷ 640
Moving pictures: 320 ⟷ 160

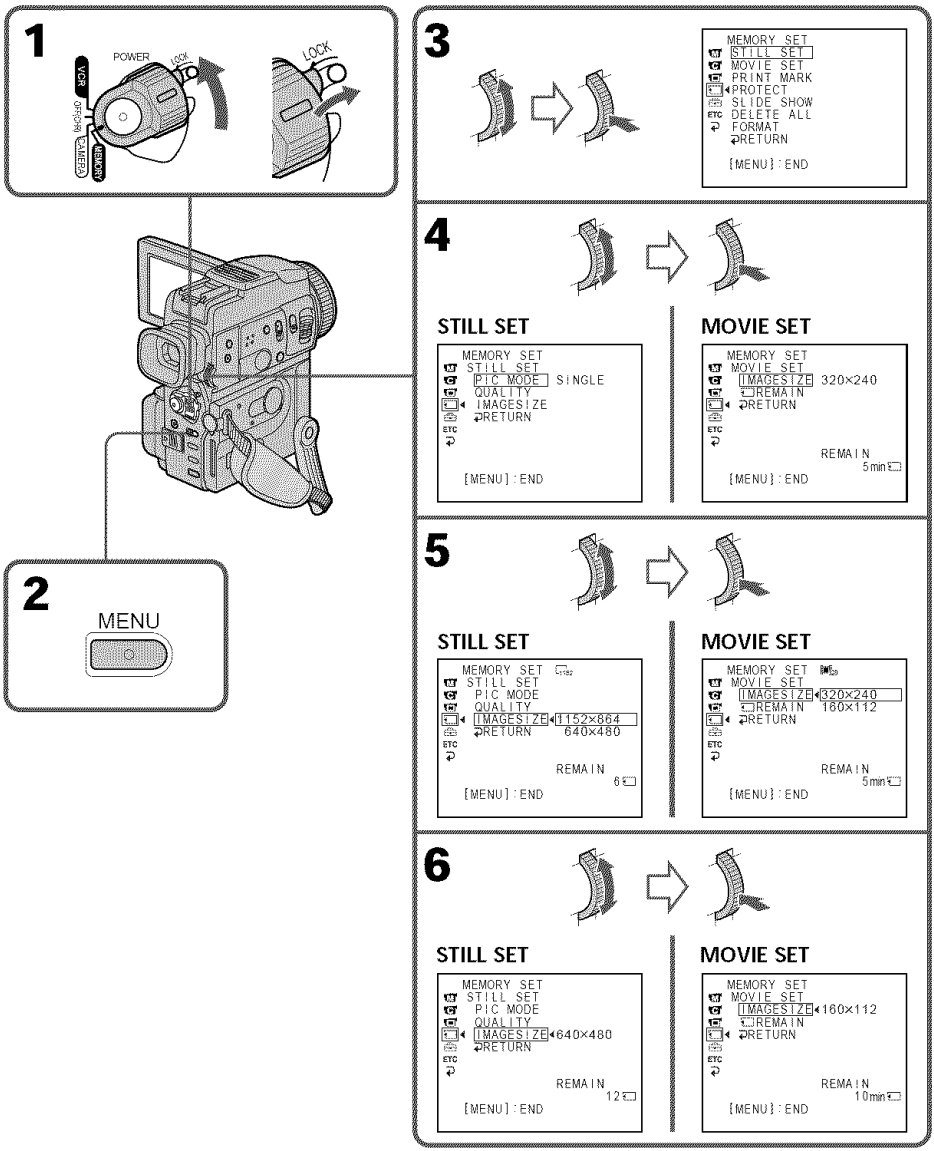
1
POWER
LOCK
VCR
OFF(CHG)
CAMERA
MEMORY
2
MENU
3
MEMORY SET
STILL SET
MOVIE SET
PRINT MARK
PROTECT
SLIDE SHOW
DELETE ALL
FORMAT
RETURN
[MENU] : END
4
STILL SET
MEMORY SET
STILL SET
PIC MODE SINGLE
QUALITY
IMAGESIZE
RETURN
[MENU] : END
MOVIE SET
MEMORY SET
MOVIE SET
IMAGESIZE 320×240
REMAIN
RETURN
REMAIN
5min
[MENU] : END
5
STILL SET
MEMORY SET
STILL SET
PIC MODE
QUALITY
IMAGESIZE 1152×864
RETURN 640×480
REMAIN
6
[MENU] : END
MOVIE SET
MEMORY SET
MOVIE SET
IMAGESIZE 320×240
REMAIN 160×112
RETURN
REMAIN
5min
[MENU] : END
6
STILL SET
MEMORY SET
STILL SET
PIC MODE
QUALITY
IMAGESIZE 640×480
RETURN
REMAIN
12
[MENU] : END
MOVIE SET
MEMORY SET
MOVIE SET
IMAGESIZE 160×112
REMAIN
RETURN
REMAIN
10min
[MENU] : END

Image size settings

Setting	Meaning	Indicator	
		Recording	Playback
1152 × 864	Records 1152 × 864 still images.	1152 SFN	1152
640 × 480	Records 640 × 480 still images.	640 SFN	640
320 × 240	Records 320 × 240 moving pictures.	320	320
160 × 112	Records 160 × 112 moving pictures.	160	160

Maximum recording time of moving pictures

Image size	Maximum recording time
320 × 240	15 seconds
160 × 112	60 seconds

Note

When images recorded on a camcorder in 1152 × 864 size are played back on a unit that does not support that size, the full image may not appear.

Approximate number of still images you can record on a "Memory Stick"

The number of images you can record varies depending on which image quality mode and image size you select and the complexity of the subject.

4MB type (supplied):

Image size	640 × 480	1152 × 864
SUPER FINE (SFN)	20 images	6 images
FINE (FINE)	40 images	12 images
STANDARD (STD)	60 images	18 images

8MB type (not supplied):

Image size	640 × 480	1152 × 864
SUPER FINE (SFN)	40 images	12 images
FINE (FINE)	81 images	25 images
STANDARD (STD)	122 images	37 images

16MB type (not supplied):

Image size	640 × 480	1152 × 864
SUPER FINE (SFN)	82 images	25 images
FINE (FINE)	164 images	51 images
STANDARD (STD)	246 images	75 images

32MB type (not supplied):

Image size	640 × 480	1152 × 864
SUPER FINE (SFN)	164 images	52 images
FINE (FINE)	329 images	104 images
STANDARD (STD)	494 images	152 images

64MB type (not supplied):

Image size	640 × 480	1152 × 864
SUPER FINE (SFN)	329 images	104 images
FINE (FINE)	659 images	208 images
STANDARD (STD)	988 images	304 images

Approximate time of moving pictures you can record on a "Memory Stick"

The time of moving pictures you can record varies depending on which image size you select and the complexity of the subject.

4MB type (supplied):

Picture size	160 × 112	320 × 240
Recording time	2 min. 40 sec.	40 sec.

8MB type (not supplied):

Picture size	160 × 112	320 × 240
Recording time	5 min. 20 sec.	1 min. 20 sec.

16MB type (not supplied):

Picture size	160 × 112	320 × 240
Recording time	10 min. 40 sec.	2 min. 40 sec.

32MB type (not supplied):

Picture size	160 × 112	320 × 240
Recording time	21 min. 20 sec.	5 min. 20 sec.

64MB type (not supplied):

Picture size	160 × 112	320 × 240
Recording time	42 min. 40 sec.	10 min. 40 sec.

Recording still images on "Memory Stick"s – Memory Photo recording

You can record still images on "Memory Stick"s.

Before operation
Insert a "Memory Stick" into your camcorder.

(1) Set the POWER switch to MEMORY. Make sure that the LOCK switch is set to the right (unlock) position.
(2) Keep pressing PHOTO lightly until the desired still image appears. The green ● mark stops flashing, then lights up. The brightness of the image and focus are adjusted, being targeted for the middle of the image and are fixed. Recording does not start yet.
(3) Press PHOTO deeper. The image displayed on the screen will be recorded on a "Memory Stick." Recording is complete when the bar scroll indicator disappears.

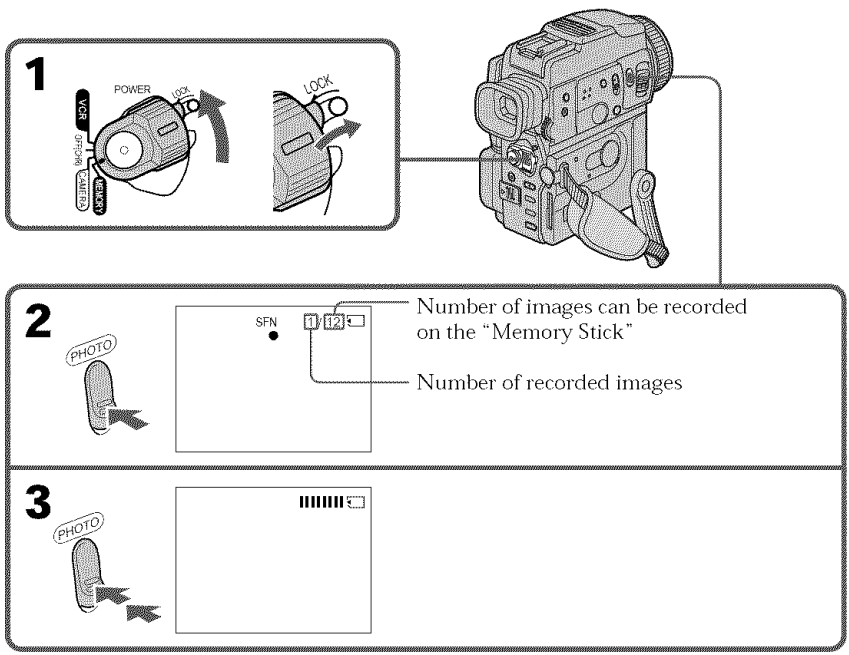

When the POWER switch is set to MEMORY
The following functions do not work:
- Wide TV
- Digital zoom
- SteadyShot function
- SUPER NIGHTSHOT
- Fader
- Picture effect
- Digital effect
- Title
- Low lux mode (The indicator flashes.)
- Sports lesson mode (The indicator flashes.)
- MEMORY MIX

While you are recording a still image
You can neither turn off the power nor press PHOTO.

When you press PHOTO on the Remote Commander
Your camcorder immediately records the image that is on the screen when you press the button.

When you press PHOTO lightly in step 2
The image momentarily flickers. This is not a malfunction.

When recording in MEMORY mode
The angle of view is a little increased than one in CAMERA mode.

Recording images continuously

You can record still images continuously. Select one of the two modes described below before recording.

Continuous mode [a]
When the image size is set to 1152 × 864, you can record up to 4 images continuously.
When the image size is set to 640 × 480, you can record up to 16 images continuously.
The number of recorded photos in continuous mode depends on the capacity of the "Memory Stick."

Multi screen mode (Recording image size is 640 × 480) [b]
You can record 9 still images continuously on a single page.

[a]

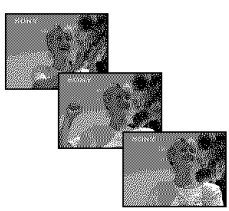

[b]

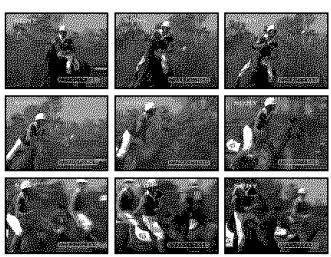

While pressing down PHOTO, your camcorder continuously record maximum number of still images depending on the image size.
When you stop pressing, the recording stops.

(1) Set the POWER switch to MEMORY. Make sure that the LOCK switch is set to the right (unlock) position.
(2) Press MENU to display the menu.
(3) Turn the SEL/PUSH EXEC dial to select [ ], then press the dial.
(4) Turn the SEL/PUSH EXEC dial to select STILL SET, then press the dial.
(5) Turn the SEL/PUSH EXEC dial to select PIC MODE, then press the dial.
(6) Turn the SEL/PUSH EXEC dial to select the desired setting, then press the dial.

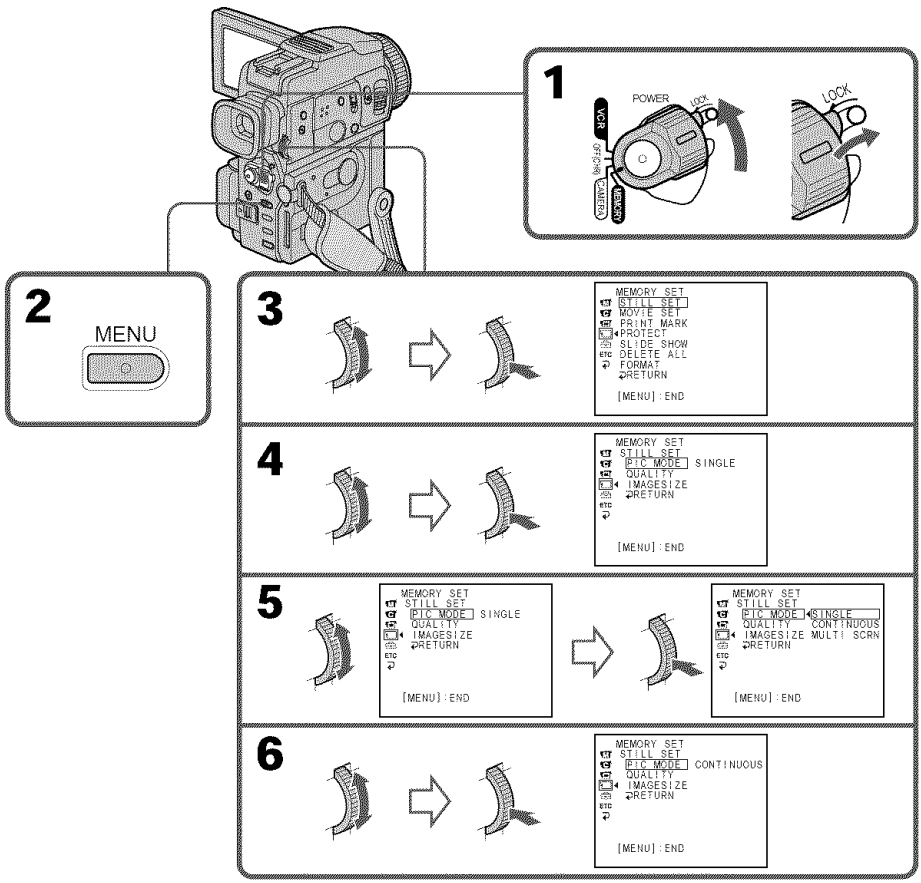

If the capacity of the "Memory Stick" becomes full

"[ ] FULL" appears on the LCD screen or in the viewfinder, and you cannot record still image on this "Memory Stick."

Continuous shooting settings

Setting	Meaning (indicator on the screen)
SINGLE	Your camcorder shoots 1 image at a time. (no indicator)
CONTINUOUS	Your camcorder shoots up to 16 still images at about 0.5 sec intervals. ( )
MULTI SCRN	Your camcorder shoots 9 still images at about 0.5 sec intervals and displays the images on a single page divided into 9 boxes. Still images are recorded in 640 × 480 size. ( )

The number of images in continuous shooting
The number of images you can shoot continuously varies depending on the image size and the capacity of the "Memory Stick."

In the continuous or multi screen mode
The flash does not work.

When shooting with the self-timer function or the Remote Commander
The camcorder automatically records up to the maximum recordable number of still images.

Recording images with the flash

The flash automatically pops up to strobe. The default setting is auto (no indicator). To change the flash mode, press the ϟ (flash) repeatedly until the flash mode indicator appears on the LCD screen or in the viewfinder.

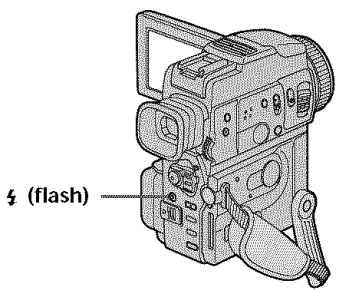

Each press of ϟ (flash) changes the indicator as follows:

(No indicator) → ◉ → ϟ → ⊛ → (No indicator)

◉ Auto red-eye reduction:	The flash fires before recording to reduce the red-eye phenomenon.
ϟ Forced flash:	The flash fires regardless of the surrounding brightness.
⊛ No flash:	The flash does not fire.

The flash is adjusted to the appropriate brightness through the photocell window for the flash. You can also change FLASH LVL to the desired brightness in the menu settings (p. 84). Try recording various images to find the most appropriate setting for FLASH LVL.

Notes

- The recommended shooting distance using the built-in flash is 31/32 feet to 8 1/3 feet (0.3 m to 2.5 m).
- Attaching a conversion lens (not supplied) may block the light from the flash or cause lens shadow to appear.
- You cannot use an external flash (not supplied) and the built-in flash at the same time.
- 👁 (Auto red-eye reduction) may not produce the desired effect depending on individual differences, the distance to the subject, the subject not looking at the pre-recording flash or other conditions.
- The flash effect cannot be obtained easily when you use forced flash in a bright location.
- If it is not easy to focus on a subject automatically, for example, when recording in the dark, use the focal distance information (p. 46) for focusing manually.

If you leave your camcorder for 5 or more minutes after disconnecting the power source

Your camcorder returns to the default setting (auto).

The flash does not fire even if you select auto and 👁 (auto red-eye reduction) during the following operations:

– NightShot
– Exposure
– Spotlight mode of PROGRAM AE
– Sunset & moon mode of PROGRAM AE
– Landscape mode of PROGRAM AE

When you use an external flash (not supplied) which does not have the auto red-eye reduction function

You cannot select the auto red-eye reduction.

Self-timer memory photo recording

You can record images on "Memory Stick"s with the self-timer. This mode is useful when you want to record yourself. You can also use the Remote Commander for this operation.

(1) Set the POWER switch to MEMORY. Make sure that the LOCK switch is set to the right (unlock) position.

(2) Press ⏲ (self-timer) in the standby mode. The ⏲ (self-timer) indicator appears on the LCD screen or in the viewfinder.

(3) Press PHOTO firmly.
Self-timer starts counting down from 10 with a beep sound. In the last 2 seconds of the countdown, the beep sound gets faster, then recording starts automatically.

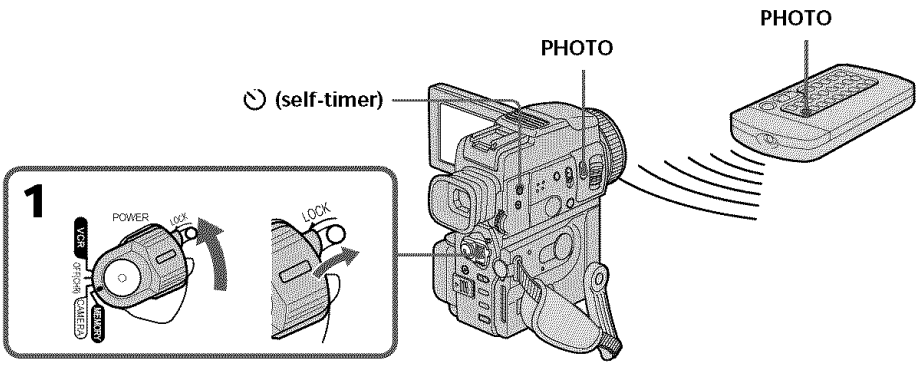

To record moving pictures on "Memory Stick"s with the self-timer

Press START/STOP in step 3. To cancel the recording, press START/STOP again.

To cancel self-timer recording

Press ⏲ (self-timer) so that the ⏲ (self-timer) indicator disappears from on the LCD screen or in the viewfinder. You cannot cancel the self-timer recording using the Remote Commander.

Note

The self-timer recording mode is automatically canceled when:
- Self-timer recording is finished.
- The POWER switch is set to OFF (CHG) or VCR.

To check the image to be recorded

You can check the image with pressing the PHOTO button lightly, then press it deeper to to start the self-timer recording.

Recording an image from a mini DV tape as a still image

Your camcorder can read moving picture data recorded on a mini DV tape and record it as a still image on a "Memory Stick". Your camcorder can also take in moving picture data through the input connector and record it as a still image on a "Memory Stick."

Before operation
- Insert a recorded mini DV tape into your camcorder.
- Insert a "Memory Stick" into your camcorder.

(1) Set the POWER switch to VCR.
(2) Press ►. The picture recorded on the mini DV tape is played back.
(3) Keep pressing PHOTO lightly until the picture from the mini DV tape freezes. CAPTURE appears on the LCD screen or in the viewfinder. Recording does not start yet.
(4) Press PHOTO deeper. The image displayed on the screen will be recorded on a "Memory Stick." Recording is complete when the bar scroll indicator disappears.

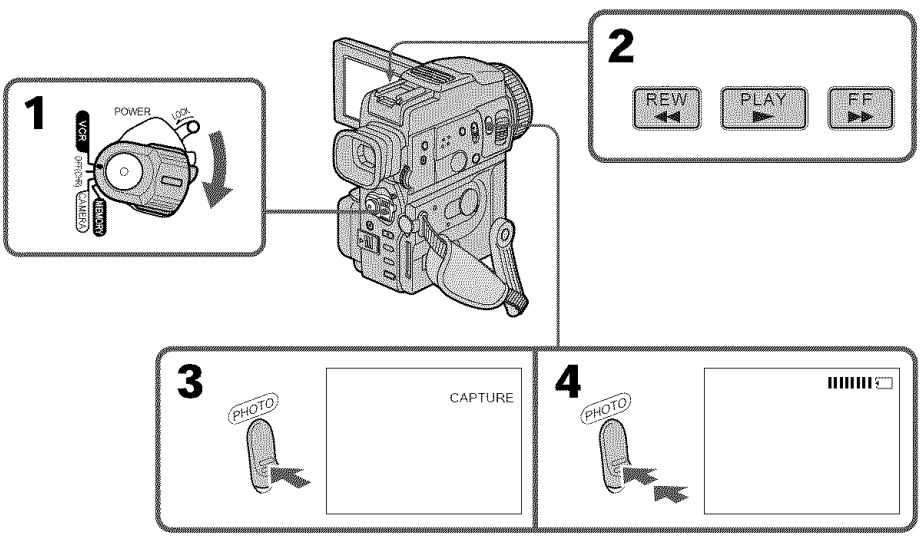

Image size of still images
Image size is automatically set to 640 × 480.

When the access lamp is lit or flashing
Do not shake or strike the unit. As well do not turn the power off , eject a "Memory Stick" or remove the battery pack. Otherwise, the image data breakdown may occur.

If "⊘" appears on the LCD screen or in the viewfinder
The inserted "Memory Stick" is incompatible with your camcorder because its format does not conform with your camcorder. Check the format of the "Memory Stick."

If you press PHOTO lightly in the playback mode
Your camcorder stops momentarily.

Sound recorded on a mini DV tape
You cannot record the audio from a mini DV tape.

Titles have already recorded on mini DV tapes
You cannot record the titles on "Memory Stick"s. The title does not appear while you are recording a still image with PHOTO.

When you press PHOTO on the Remote Commander
Your camcorder immediately records the image that is on the screen when you press the button.

Recording a still image from other equipment

(1) Set the POWER switch to VCR and set DISPLAY in ETC to LCD in the menu settings.
(2) Play back the recorded tape, or turn the TV on to see the desired program. The image of the other equipment is displayed on the LCD screen or in the viewfinder.
(3) Follow steps 3 and 4 on page 108.

Using the A/V connecting cable

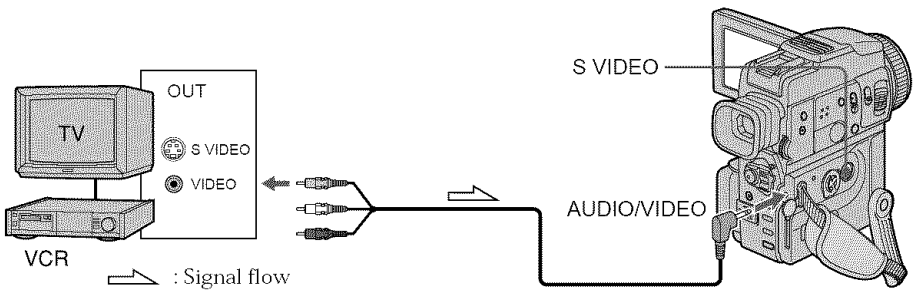

Connect the yellow plug of the A/V connecting cable to the video jack on the VCR or the TV.

If your TV or VCR has an S video jack
Connect using an S video cable (not supplied) to obtain high-quality pictures.
With this connection, you do not need to connect the yellow (video) plug of the A/V connecting cable.
Connect an S video cable (not supplied) to the S video jacks of both your camcorder and the TV or VCR.
This connection produces higher quality DV format pictures.

Using the i.LINK cable (DV connecting cable)

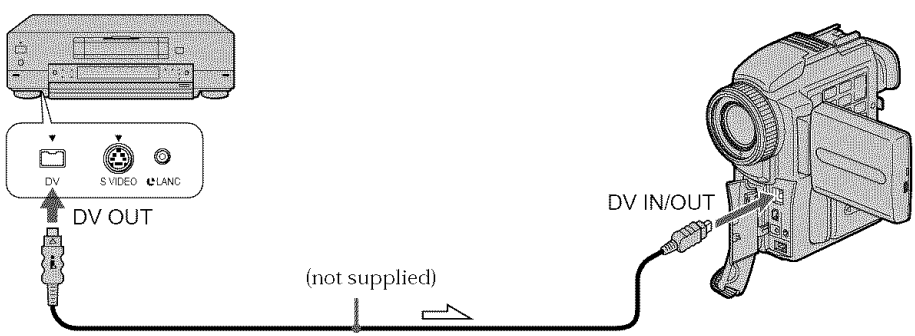

: Signal flow

Recording moving pictures on "Memory Stick"s – MPEG movie recording

You can record moving pictures with sound on "Memory Stick"s.

Before operation
Insert a "Memory Stick" into your camcorder.

(1) Set the POWER switch to MEMORY. Make sure that the LOCK switch is set to the right (unlock) position.
(2) Press START/STOP. Your camcorder starts recording. The camera recording lamp located on the front of your camcorder lights up. When IMAGESIZE in the menu settings is set to 160 × 112, the maximum recording time is 60 seconds. However, when IMAGESIZE in the menu settings is set to 320 × 240, the maximum recording time is 15 seconds.

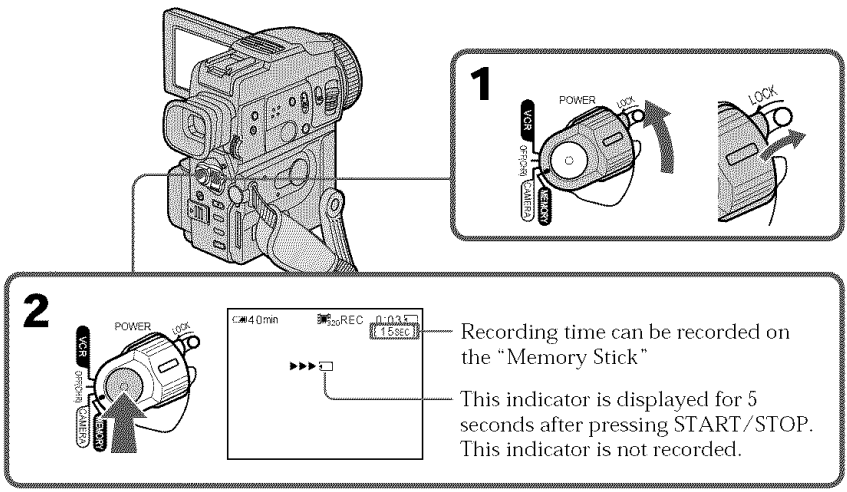

To stop recording
Press START/STOP.

Note
Sound is recorded in monaural.

When the POWER switch is set to MEMORY
The following functions do not work:
- Wide TV
- Digital zoom
- SteadyShot function
- SUPER NIGHTSHOT
- Fader
- Picture effect
- Digital effect
- Title
- Low lux mode (The indicator flashes.)
- Sports lesson mode (The indicator flashes.)
- MEMORY MIX

When recording in MEMORY mode
The angle of view is a little increased than one in CAMERA mode.

When using an external flash (not supplied)
Turn the power of the external flash off when recording moving pictures on "Memory Stick"s. Otherwise, the charging sound for the flash may be recorded.

During recording on "Memory Stick"
Do not eject the cassette tape from your camcorder. During ejecting the tape, sound is not recorded on the "Memory Stick."

Recording a picture from a mini DV tape as a moving picture

Your camcorder can read moving picture data recorded on a mini DV tape and record it as a moving picture on a "Memory Stick." Your camcorder can also take in moving picture data through the input connector and record it as a moving picture on a "Memory Stick."

Before operation

- Insert a recorded mini DV tape into your camcorder.
- Insert a "Memory Stick" into your camcorder.

(1) Set the POWER switch to VCR.
(2) Press ►. The picture recorded on the mini DV tape is played back.
(3) Press START/STOP on your camcorder at the scene where you want to start recording from. The camera recording lamp located on the front of your camcorder lights up. When IMAGESIZE in the menu settings is set to 160 × 112, the maximum recording time is 60 seconds. However, when IMAGESIZE in the menu setting is set to 320 × 240, the maximum recording time is 15 seconds.

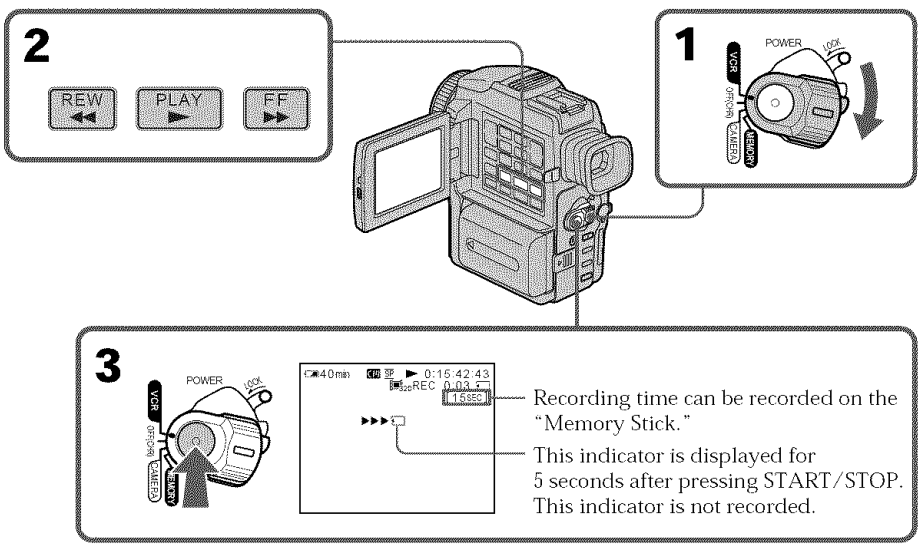

To stop recording

Press START/STOP.

Notes

- Sound recorded in 48 kHz is converted to one in 32 kHz when recording images from a mini DV tape to "Memory Stick"s.
- Sound recorded in stereo is converted to monaural sound when recording from tapes.

When the access lamp is lit or flashing

Do not shake or strike the unit. As well do not turn the power off , eject a "Memory Stick" or remove the battery pack. Otherwise, the image data breakdown may occur.

Titles have already recorded on mini DV tapes

You cannot record the titles on "Memory Stick"s. The title does not appear while you are recording a still image with START/STOP.

Data code recorded on a mini DV tape

You cannot record the data code recorded on a mini DV tape.

If "AUDIO ERROR" is displayed

Sound that cannot be recorded by your camcorder has been recorded. Connect the A/V connecting cable to input images from an external unit used to play back the image (p. 114).

Recording a moving picture from other equipment

(1) Set the POWER switch to VCR and set DISPLAY in [ETC] to LCD in the menu settings.
(2) Play back the recorded tape, or turn the TV on to see the desired program.
The image of the other equipment is displayed on the LCD screen or in the viewfinder.
(3) Follow steps 3 on page 112.

Using the A/V connecting cable

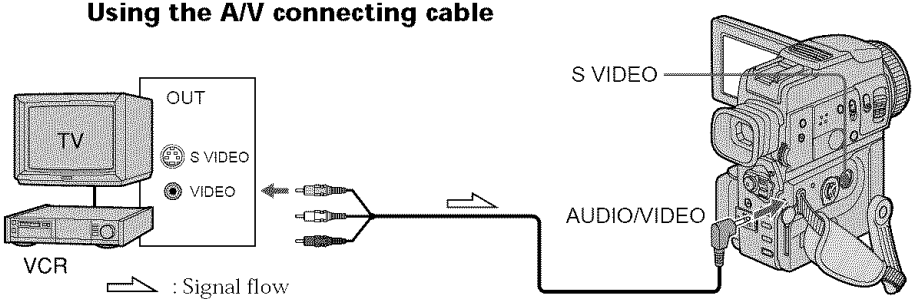

Connect the yellow plug of the A/V connecting cable to the video jack on the VCR or the TV.

If your TV or VCR has an S video jack
Connect using an S video cable (not supplied) to obtain high-quality pictures.
With this connection, you do not need to connect the yellow (video) plug of the A/V connecting cable.
Connect an S video cable (not supplied) to the S video jacks of both your camcorder and the TV or VCR.
This connection produces higher quality DV format pictures.

Using the i.LINK cable (DV connecting cable)

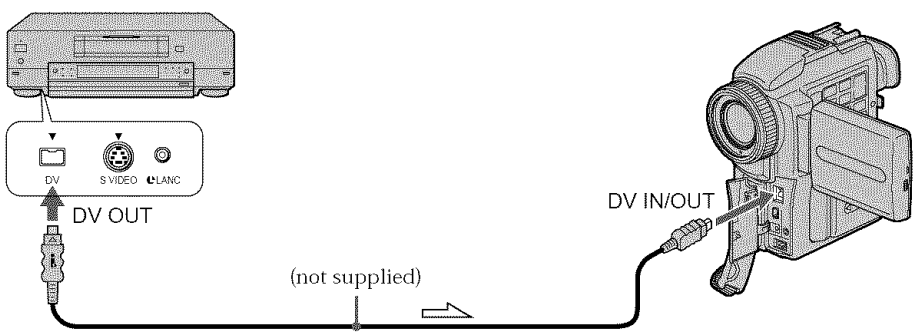

Note
The "[ ]" flashes in the following instances. If this happens, eject and insert "Memory Stick" again, and record distortion-free images.
- When recording on a tape in a poor recording state, for example, on a tape that has been repeatedly used for dubbing
- When attempting to input images that are distorted due to poor radio wave reception when a TV tuner unit is in use

During recording on "Memory Stick"
Do not eject the cassette tape from your camcorder. During ejecting the tape, sound is not recorded on the "Memory Stick."

Superimposing a still image in a "Memory Stick" on a moving picture - MEMORY MIX

You can superimpose a still image you have recorded on a "Memory Stick" on the top of the moving picture you are recording.

M. CHROM (Memory chromakey)
You can swap a blue area of a still image such as an illustration or a frame with a moving picture.

M. LUMI (Memory luminancekey)
You can swap a brighter area of a still image such as a handwritten illustration or title with a moving picture. Record a title on a "Memory Stick" before a trip or event for convenience.

C. CHROM (Camera chromakey)
You can superimpose a moving picture on the top of a still image such as a image can be used as background. Shoot the subject against a blue background. The blue area of the moving picture will be swapped with a still image.

M. OVERLAP (Memory overlap)
You can make a moving picture fade in on top of a still image.

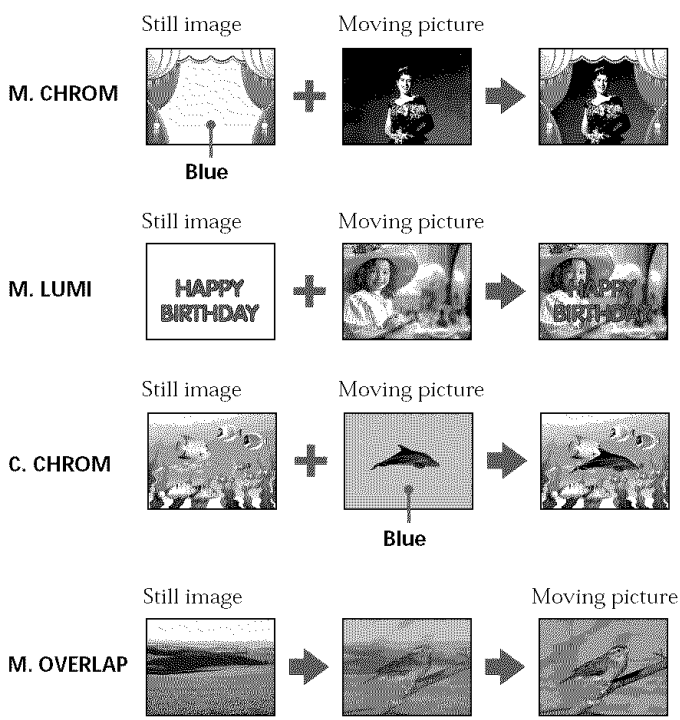

Superimposing a still image in a "Memory Stick" on a moving picture – MEMORY MIX

Before operation

- Insert a mini DV tape for recording into your camcorder.
- Insert a recorded "Memory Stick" into your camcorder.

(1) Set the POWER switch to CAMERA.
(2) Press MEMORY MIX in the standby mode.
The last recorded still image on "Memory Stick" appears on the lower part of the screen as a thumbnail image.
(3) Press MEMORY+/– to select the still image you want to superimpose.
To see the previous image, press MEMORY –. To see the next image, press MEMORY+.
(4) Turn the SEL/PUSH EXEC dial to select the desired mode.
The mode changes as follows:
M.CHROM ⟷ M.LUMI ⟷ C.CHROM ⟷ M. OVERLAP
(5) Press the SEL/PUSH EXEC dial.
The still image is superimposed on the moving picture. Your camcorder automatically returns to the standby mode.
(6) Turn the SEL/PUSH EXEC dial to adjust the effect.
(7) Press START/STOP to start recording.

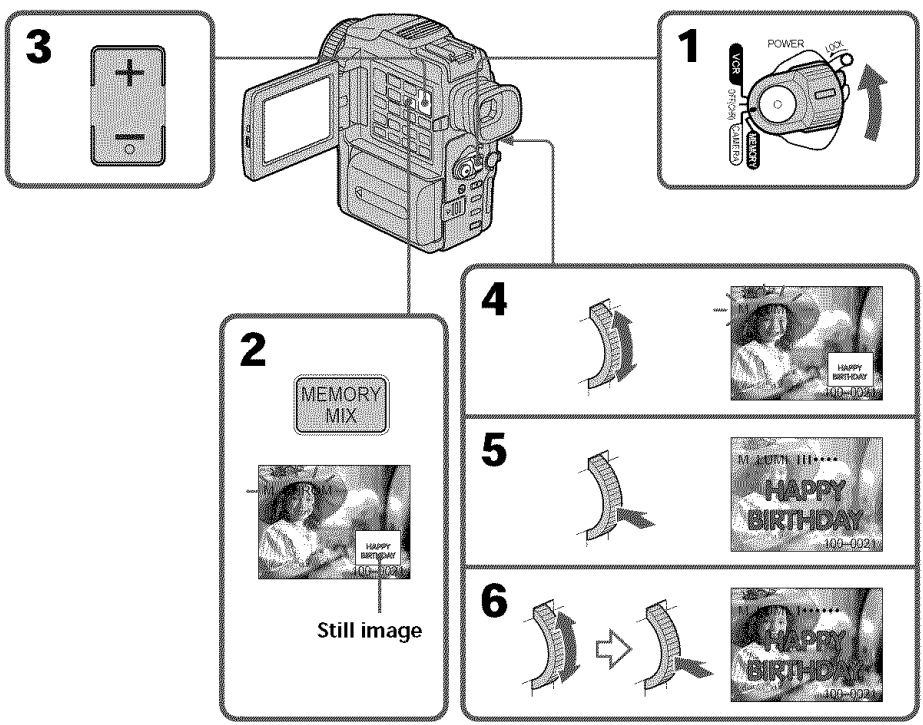

Items to be adjusted

M. CHROM	The color (blue) scheme of the area in the still image which is to be swapped with a moving picture
M. LUMI	The color (bright) scheme of the area in the still image which is to be swapped with a moving picture
C. CHROM	The color (blue) scheme of the area in the moving picture which is to be swapped with a still image
M. OVERLAP	No adjustment necessary

The fewer bars there are on the screen, the stronger the effect.

To change the still image to be superimposed

Do either of the following:
– Press MEMORY+/– before step 6.
– Press the SEL/PUSH EXEC dial before step 6, and repeat the procedure form step 4. (Except for M.OVERLAP)

To change the mode setting

Press the SEL/PUSH EXEC dial before step 6, and repeat the procedure from step 4.

To cancel MEMORY MIX

Press MEMORY MIX.

Notes

- You cannot use MEMORY MIX function for moving pictures recorded on "Memory Stick"s.
- When the overlapping still image has a large amount of white, the thumbnail image of the picture may not be clear.

The "Memory Stick" supplied with your camcorder has stored 20 images

– For M.CHROM : 18 images (such as a frame) 100-0001 ~ 100-0018
– For C.CHROM : 2 images (such as a background) 100-0019 ~ 100-0020

Sample images

Sample images stored in the "Memory Stick" supplied with your camcorder are protected (p. 134).

Image data modified with personal computers or shot with other equipment

You may not be able to play them back with your camcorder.

During recording

You cannot change the mode setting.

Copying still images from a mini DV tape – Photo save

Using the search function, you can automatically take in only still images from mini DV tapes and record them on a "Memory Stick" in sequence.

Before operation

- Insert a recorded mini DV tape into your camcorder and rewind the tape.
- Insert a "Memory Stick" into your camcorder.

(1) Set the POWER switch to VCR.
(2) Press MENU to display the menu.
(3) Turn the SEL/PUSH EXEC dial to select [ ], then press the dial.
(4) Turn the SEL/PUSH EXEC dial to select PHOTO SAVE, then press the dial. PHOTO BUTTON appears on the LCD screen or in the viewfinder.
(5) Press PHOTO firmly. The still image from the mini DV tape is recorded on a "Memory Stick." The number of still images copied is displayed. END is displayed when copying is completed.

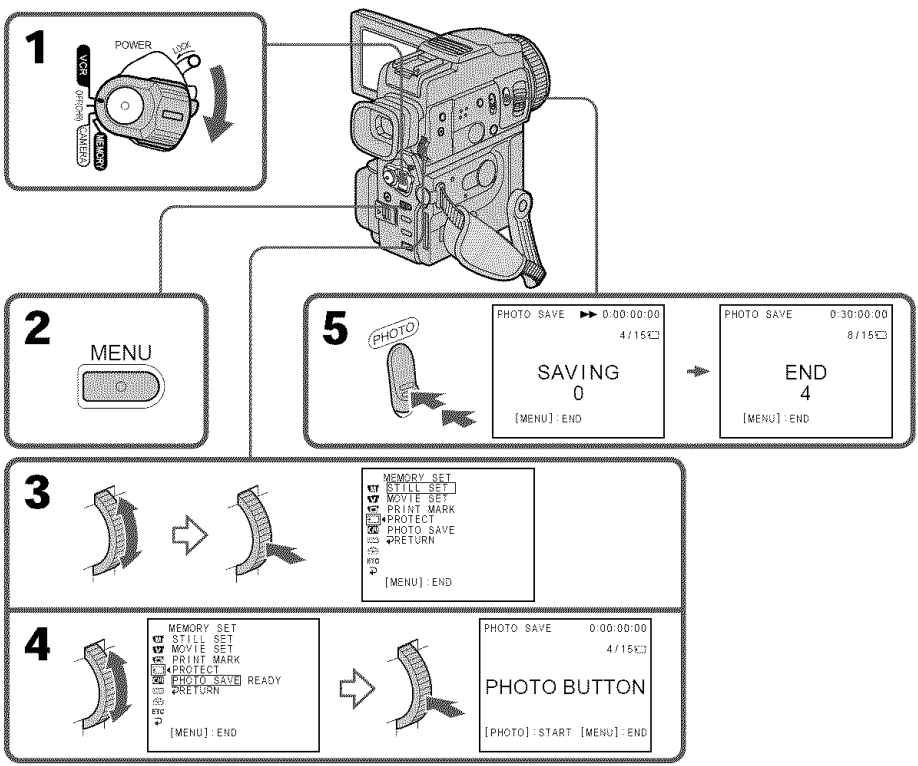

To stop or end copying

Press MENU.

When the memory of the "Memory Stick" is full

MEMORY FULL appears on the LCD screen or in the viewfinder, and the copying stops. Insert another "Memory Stick" and repeat the procedure from step 2.

Image size of still images

Image size is automatically set to 640 × 480.

When the access lamp is lit or flashing

Do not shake or strike your camcorder. As well do not turn the power off, eject a "Memory Stick" or remove the battery pack. Otherwise, the image data breakdown may occur.

If the write-protect tab on the "Memory Stick" is set to LOCK

NOT READY appears when you select the item in the menu settings.

When you change "Memory Stick"s in the middle of copying

Your camcorder resumes copying from the last image recorded on the previous "Memory Stick."

Viewing a still image – Memory photo playback

You can play back still images recorded on a "Memory Stick." You can also play back 6 images including moving picture in order at a time by selecting the index screen.

Before operation
Insert a "Memory Stick" into your camcorder.

(1) Set the POWER switch to MEMORY or VCR. Make sure that the LOCK switch is set to the right (unlock) position.
(2) Press MEMORY PLAY. The last recorded image is displayed.
(3) Press MEMORY +/– to select the desired still image. To see the previous image, press MEMORY –. To see the next image, press MEMORY +.

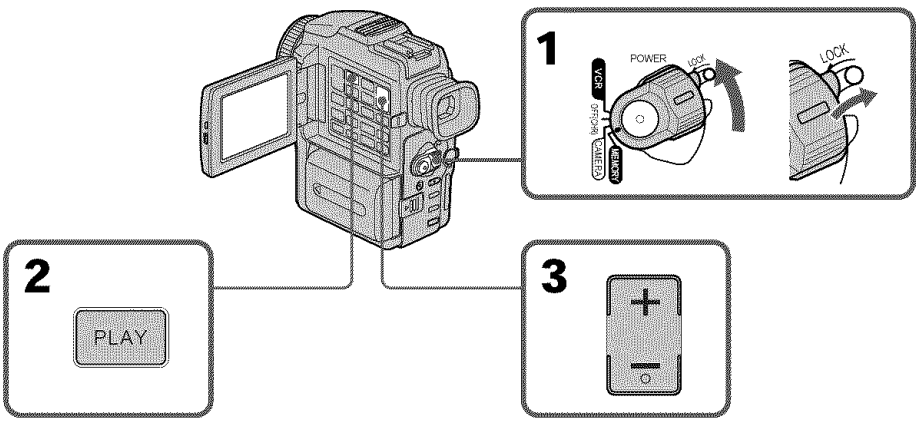

To stop memory photo playback

Press MEMORY PLAY.

Notes on the file name
- The directory is not displayed if the structure of the directory does not conform to the DCF98 standard.
- "DIRECTORY ERROR" may appear on the LCD screen or in the viewfinder if the structure of the directory does not conform to the DCF98 standard. While this message appears, you can play back images but cannot record them on the "Memory Stick".
- The file name flashes on the LCD screen or in the viewfinder if the file is corrupted or the file is unreadable.

To play back recorded images on a TV screen
- Connect your camcorder to the TV with the A/V connecting cable supplied with your camcorder before operation.
- When operating memory photo playback on a TV or on the LCD screen, the image quality may appear to have deteriorated. This is not a malfunction. The image data is as good as ever.
- Turn the audio volume of the TV down before operation, or noise (howling) may be output from the TV speakers.

Recording date
When you press DATA CODE on the Remote Commander, you can see the date of the recording.

Image data modified with personal computers or shot with other equipment
You may not be able to play them back with your camcorder.

When no image is recorded on the "Memory Stick"
The message " NO FILE" appears.

Screen indicators during still image playback

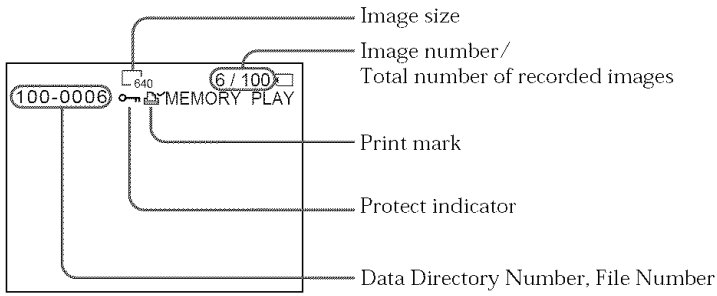

Playing back 6 recorded images at a time (index screen)

You can play back 6 recorded images at a time. This function is especially useful when searching for a particular image.

(1) Set the POWER switch to MEMORY or VCR. Make sure that the LOCK switch is set to the right (unlock) position.

(2) Press MEMORY INDEX to display the index screen.

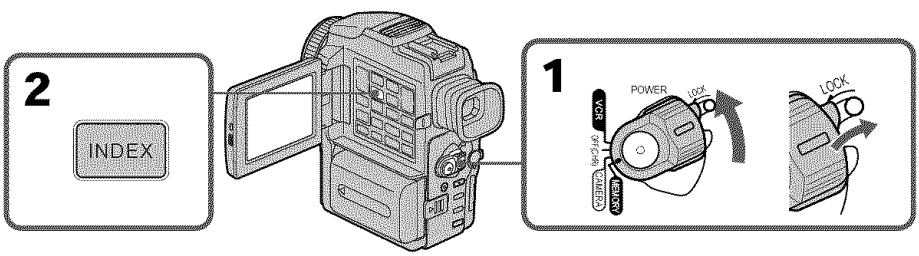

A red ▶ mark appears above the image that is displayed before changing to the index screen mode.

MEMORY – : to display the previous 6 images
MEMORY + : to display the following 6 images

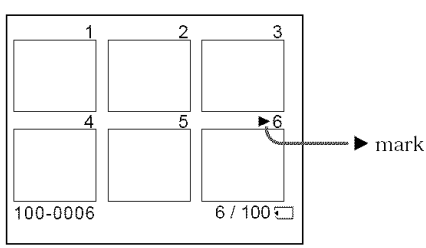

To return to the normal playback screen (single screen)

Press MEMORY +/– to move the ▶ mark to the image you want to display on full screen, then press MEMORY PLAY.

Note

When displaying the index screen, the number appears above each image. This indicates the order in which images are recorded on the "Memory Stick." These numbers are different from the data file names.

Image data modified with personal computers or shot with other equipment

These files may not be displayed on the index screen.

Viewing a moving picture – MPEG movie playback

You can play back moving pictures recorded on a "Memory Stick." You can also play back 6 images including still images in order at a time by selecting the index screen.

Before operation
Insert a "Memory Stick" into your camcorder.

(1) Set the POWER switch to MEMORY or VCR. Make sure that the LOCK switch is set to the right (unlock) position.
(2) Press MEMORY PLAY. The last recorded image is displayed.
(3) Press MEMORY +/– to select the desired moving pictures. To see the previous picture, press MEMORY –. To see the next picture, press MEMORY +.
(4) Press MPEG ► II to start playback.

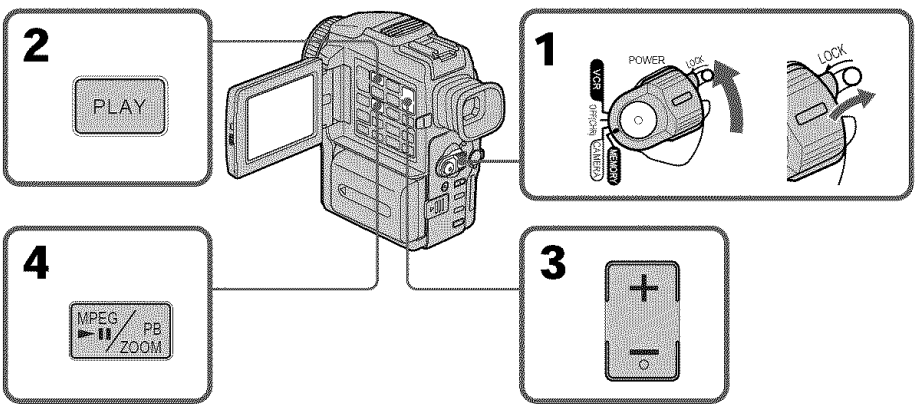

To stop MPEG movie playback

Press MPEG ► II.

To play back recorded images on a TV screen
- Connect your camcorder to the TV with the A/V connecting cable supplied with your camcorder before operation.
- Turn the audio volume of the TV down before operation, or noise (howling) may be output from the TV speakers.

Recording date
When you press DATA CODE on the Remote Commander, you can see the date of the recording.

Image data modified with personal computers or shot with other equipment
You may not be able to play them back with your camcorder.

When no image is recorded on the "Memory Stick"
The message "NO FILE" appears.

Screen indicators during moving picture playback

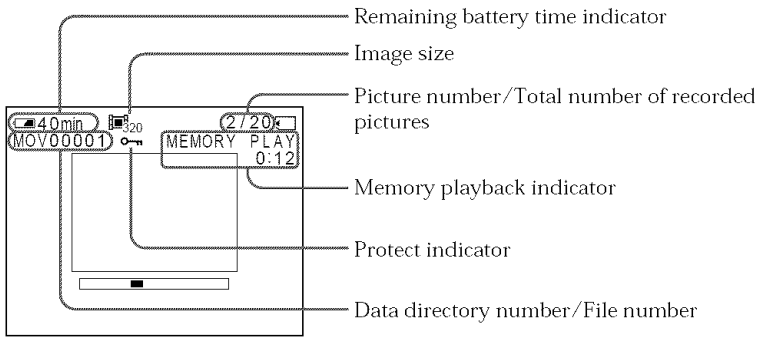

Viewing images using a personal computer

You can view data recorded on the "Memory Stick" using a personal computer.

On file format

Data recorded on the "Memory Stick" is stored in the following formats. Make sure that applications that support these file formats are installed on your personal computer.

- Still images: JPEG format
- Moving images/audio: MPEG format

Recommended computer environment

Recommended Windows environment

OS: Microsoft Windows 98, Windows 98SE, Windows 2000 Professional standard installation is required.
Operation is not assured in an environment upgraded from:
Windows 3.1, Windows 95 to Windows 98 or Windows 98 to Windows 98SE.
Windows 95, Windows 98, Windows 98SE, Windows NT3.51 or Windows NT4.0 to Windows 2000 Professional.

CPU: MMX Pentium 200 MHz or faster

The USB connector must be provided as standard.

ActiveMovie Player (DirectShow) must be installed (to play back moving pictures).

Recommended Macintosh environment

Macintosh computer with the Mac OS 8.5.1/8.6/9.0 standard installation

However, note that the update to Mac OS 9.0 should be used for the following models.

- iMac with the Mac OS 8.6 standard installation and a slot loading type CD-ROM drive
- iBook or G4 with the Mac OS 8.6 standard installation

The USB connector must be provided as standard.

QuickTime 3.2 or newer must be installed (to play back moving pictures).

Notes

- Operations are not guaranteed for either the Windows or Macintosh environment if you connect 2 or more USB equipment to a single personal computer at the same time, or when using a hub.
- Depending on the type of USB equipment that is used simultaneously, some equipment may not operate.
- Operations are not guaranteed for all the recommended computer environments mentioned above.

Installing the USB driver

Before connecting your camcorder to your personal computer, install the USB driver to the computer. The USB driver is contained together with application software for viewing images on a CD-ROM which is supplied with your camcorder.

For Windows 98/98SE, Windows 2000 users

(1) Turn on your personal computer and allow Windows to load.
(2) Insert the supplied CD-ROM in the CD-ROM drive of your personal computer.
(3) Launch the application program on CD-ROM. After a moment, the dialog box appears on your desktop. Set the cursor on "USB Driver Installation for Windows ® 98/98SE/2000" and click.
(4) The Setup program starts. Complete the installation on CD-ROM.
(5) Connect the USB jack on your camcorder with the USB connector on your personal computer using the supplied USB cable.
(6) Insert a "Memory Stick" into your camcorder, connect the AC power adaptor and set the POWER switch to MEMORY.
PC MODE appears on the LCD screen of your camcorder. Your personal computer recognizes the camcorder, and the Windows Add Hardware Wizard starts.
(7) The Add Hardware Wizard starts twice because 2 different USB drivers are installed. Be sure to allow the installation to complete without interrupting it.

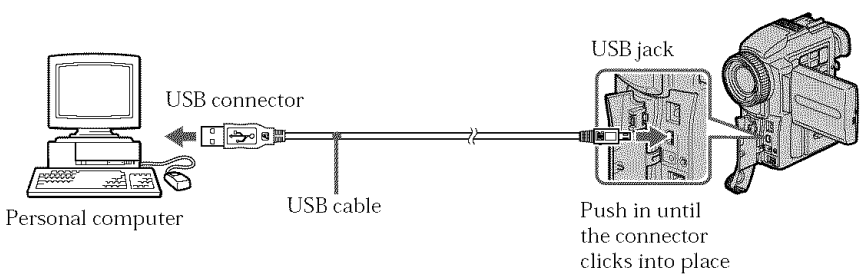

Note
You cannot install the USB driver if a "Memory Stick" is not in your camcorder.
Be sure to insert a "Memory Stick" into your camcorder before installing the USB driver.

For Macintosh users

(1) Turn on your personal computer and allow the Mac OS to load.
(2) Insert the supplied CD-ROM in the CD-ROM drive of your personal computer.
(3) Double-click the CD-ROM drive icon to open the window.
(4) Double-click the icon of the hard disk containing the OS to open the window.
(5) Move the following 2 files from the window opened in step 3 to the System Folder icon in the window opened in step 4 (drag and drop).
- Sony Camcorder USB Driver
- Sony Camcorder USB Shim

(6) When "Put these items into the Extensions folder?" appears, click OK.
(7) Restart your personal computer.

Viewing images

For Windows 98 users

(1) Turn on the power of your personal computer and allow Windows 98 to load.
(2) Connect one end of the USB cable to the USB jack on the camcorder and the other end to the USB connector on your personal computer.
(3) Insert a "Memory Stick" into your camcorder, and connect the AC power adaptor to your camcorder and then to a wall outlet.
(4) Set the POWER switch to MEMORY.
PC MODE appears on the LCD screen of the camcorder.
(5) Open "My Computer" on Windows 98 and double click the newly recognized drive. (Example: "Removable Disk (D:)")
The folders inside the "Memory Stick" are displayed.
(6) Select and double-click the desired image file from the folder.
For the detailed folder and file name, see "Image file storage destinations and image files" (p. 129).

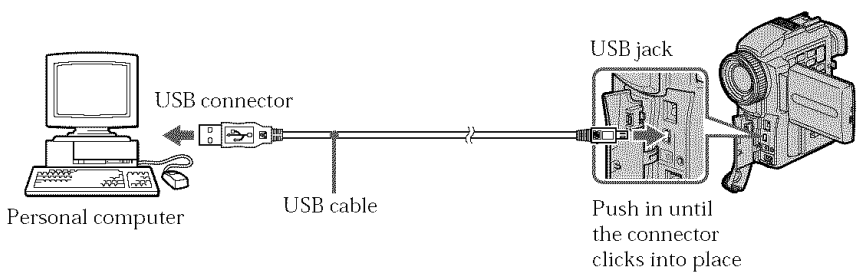

Desired file type	Double-click in this order
Still image	"Dcim" folder → "100msdcf" folder → Image file
Moving picture*	"Mssony" folder → "Moml0001" folder → Image file*

* Copying a file to the hard disk of your personal computer before viewing it is recommended. If you play back the file directly from the "Memory Stick", the image and sound may break off.

Unplug the USB cable/Eject the "Memory Stick"

To unplug the USB cable or eject the "Memory Stick", follow the procedure below.

For Windows 2000 users

(1) Move the cursor to the "Unplug or Eject Hardware" icon on the Task Tray and click to cancel the applicable drive.
(2) A message to remove the device from the system appears, then unplug the USB cable or eject the "Memory Stick."

For Machintosh users

(1) Quit application programs opened.
Make sure that the access lamp of the hard disk does not lit.
(2) Drag and drop the "Memory Stick" icon to the Trash or select Eject under the Special menu.
(3) Eject the "Memory Stick."

Notes on using your personal computer

"Memory Stick"

- "Memory Stick" operations on your camcorder cannot be assured if the "Memory Stick" has been formatted on your personal computer.
- Do not optimize the "Memory Stick" on a Windows machine. This will shorten the "Memory Stick" life.
- Do not compress the data on the "Memory Stick." Compressed files cannot be played back on your camcorder.

Software

- Depending on your application software, the file size may increase when you open a still image file.
- When you load an image modified using a retouch software from your personal computer to the camcorder or when you directly modify the image on the camcorder, the image format will differ so a file error indicator may appear and you may be unable to open the file.

Communications with your personal computer

Communications between your camcorder and your personal computer may not recover after recovering from Suspend, Resume, or Sleep.

Image file storage destinations and image files

Image files recorded with your camcorder are grouped in folders by recording mode. The meanings of the file names are as follows. □□□□ stands for any number within the range from 0001 to 9999.

For Windows 98 users (The drive recognizing the camera is [D:])

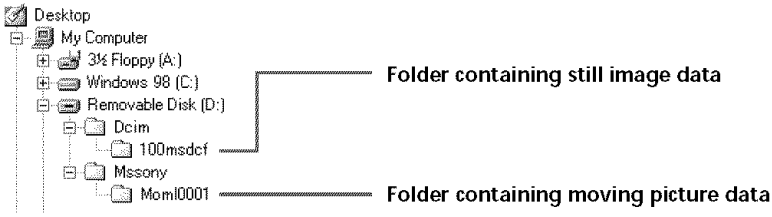

Folder	File	Meaning
100msdcf	DSC0□□□□.JPG	Still image file
Moml0001	MOV0□□□□.MPG	Moving picture file

Copying the image recorded on "Memory Stick"s to mini DV tapes

You can copy images or titles recorded on "Memory Stick" and record them to a mini DV tape.

Before operation
- Insert mini DV tape for recording into your camcorder.
- Insert a "Memory Stick" into your camcorder.

(1) Set the POWER switch to VCR.
(2) Using the video control buttons, search a point where you want to record the desired images. Set the mini DV tape to playback pause.
(3) Press ● REC and the button on its right simultaneously on your camcorder. The mini DV tape is set to the recording pause mode.
(4) Press MEMORY PLAY to play back the image you want to copy.
(5) Press ❚❚ to start recording and press ❚❚ again to stop.
(6) If you have more to copy, repeat steps 4 and 5.

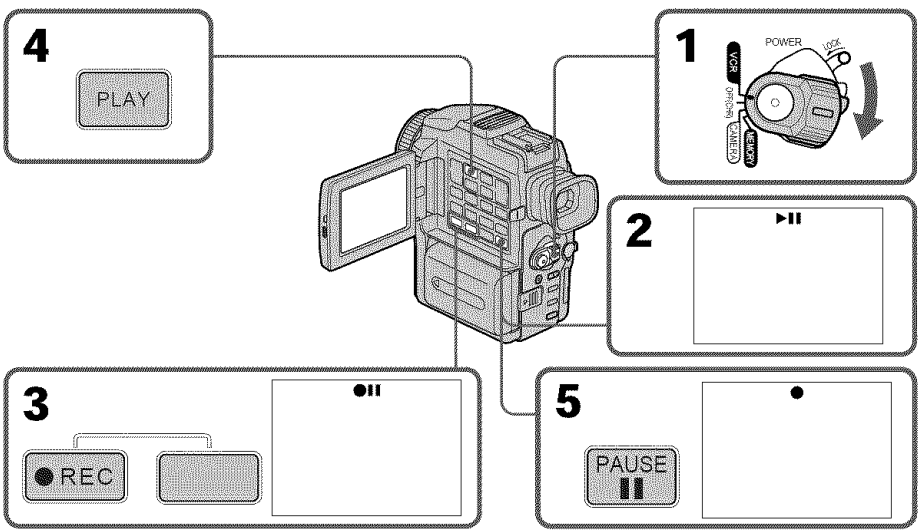

To stop copying in the middle

Press ■.

During copying

You cannot operate the following buttons:
- MEMORY PLAY
- MEMORY INDEX
- MEMORY DELETE
- MEMORY +/–
- MEMORY MIX

Note on the index screen

You cannot record the index screen.

Image data modified with personal computers or shot with other equipment

You may not be able to copy them with your camcorder.

If you press DISPLAY in the standby or recording mode

You can see memory playback and the file name indicators in addition to the indicators pertinent to mini DV tapes, such as the time code indicator.

Enlarging still images recorded on "Memory Stick"s – Memory PB ZOOM

You can enlarge still images recorded on a "Memory Stick." You can select and view the desired part from the enlarged still image. Also you can copy the desired part of the enlarged still image to mini DV tapes or video tapes.

Before operation
Insert a "Memory Stick" into your camcorder.

(1) Set the POWER switch to MEMORY or VCR. Make sure that the LOCK switch is set to the right (unlock) position.
(2) In the memory playback mode, press PB ZOOM on your camcorder. The still image is enlarged, and ↑↓ appears on the LCD screen or in the viewfinder.
(3) Turn SEL/PUSH EXEC dial to move the enlarged image, then press the dial.
↑ : The image moves downwards.
↓ : The image moves upwards.
(4) Turn SEL/PUSH EXEC dial to move the enlarged image, then press the dial.
→ : The image moves leftward. (Turn the dial to upwards.)
← : The image moves rightward. (Turn the dial to downwards.)

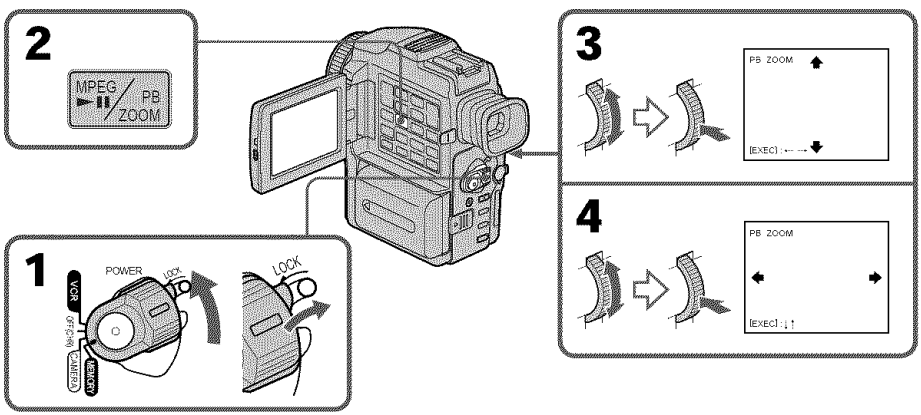

To cancel the play zoom function

Press PB ZOOM.

Note
You cannot record the images enlarged by the PB ZOOM mode on "Memory Stick"s.

In the PB ZOOM mode
The digital effect function does not work.

The PB ZOOM function is cancelled when the following buttons are pressed:
- MENU
- MEMORY PLAY
- MEMORY INDEX
- MEMORY +/–

Pictures in the PB ZOOM mode
Pictures in the PB ZOOM mode are not output through the DV IN/OUT jack when the POWER switch is set to MEMORY.

Moving pictures recorded on "Memory Stick"s
The PB ZOOM function does not work on moving pictures recorded on "Memory Stick"s.

Playing back images in a continuous loop – SLIDE SHOW

You can automatically play back images in sequence. This function is useful especially when checking recorded images or during a presentation.

Before operation
Insert a "Memory Stick" into your camcorder.

(1) Set the POWER switch to MEMORY. Make sure that the LOCK switch is set to the right (unlock) position.
(2) Press MENU to display the menu.
(3) Turn the SEL/PUSH EXEC dial to select [icon], then press the dial.
(4) Turn the SEL/PUSH EXEC dial to select SLIDE SHOW, then press the dial.
(5) Press MEMORY PLAY. Your camcorder plays back the images recorded on a "Memory Stick" in sequence.

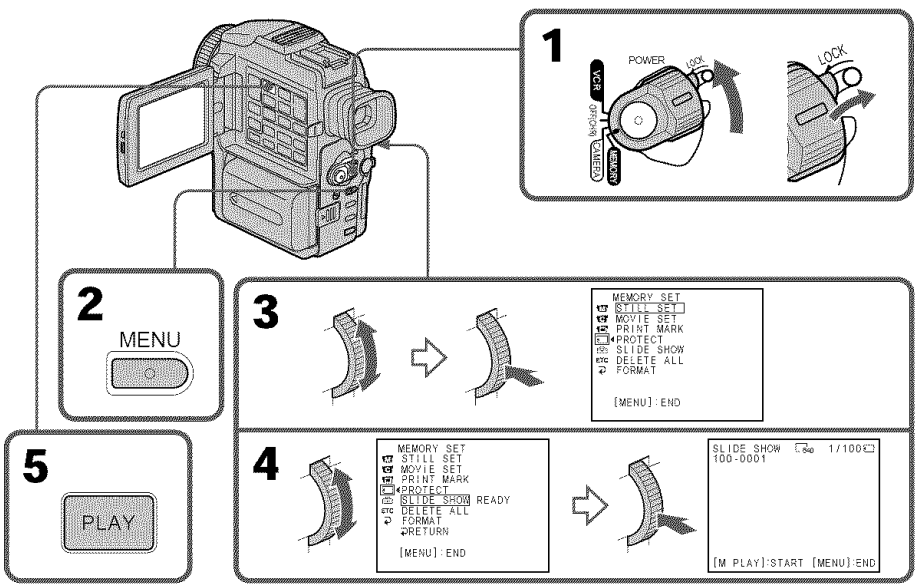

To stop the slide show
Press MENU.

To pause during a slide show
Press MEMORY PLAY.

To start the slide show from a particular image
Select the desired image using MEMORY +/– buttons before step 2.

To view the recorded images on TV
Connect your camcorder to a TV with the A/V connecting cable supplied with your camcorder before operation.

If you change the "Memory Stick" during operation
The slide show does not operate. If you change the "Memory Stick," be sure to follow the steps again from the beginning.

Preventing accidental erasure – Image protection

To prevent accidental erasure of important images, you can protect selected images.

Before operation
Insert a "Memory Stick" into your camcorder.

(1) Set the POWER switch to MEMORY or VCR. Make sure that the LOCK switch is set to the right (unlock) position.
(2) Select the image you want to protect.
(3) Press MENU to display the menu.
(4) Turn the SEL/PUSH EXEC dial to select [◄], then press the dial.
(5) Turn the SEL/PUSH EXEC dial to select PROTECT, then press the dial.
(6) Turn the SEL/PUSH EXEC dial to select ON, then press the dial.
(7) Press MENU to make the menu display disappear. The "O-π" mark is displayed beside the data file name of the selected image.

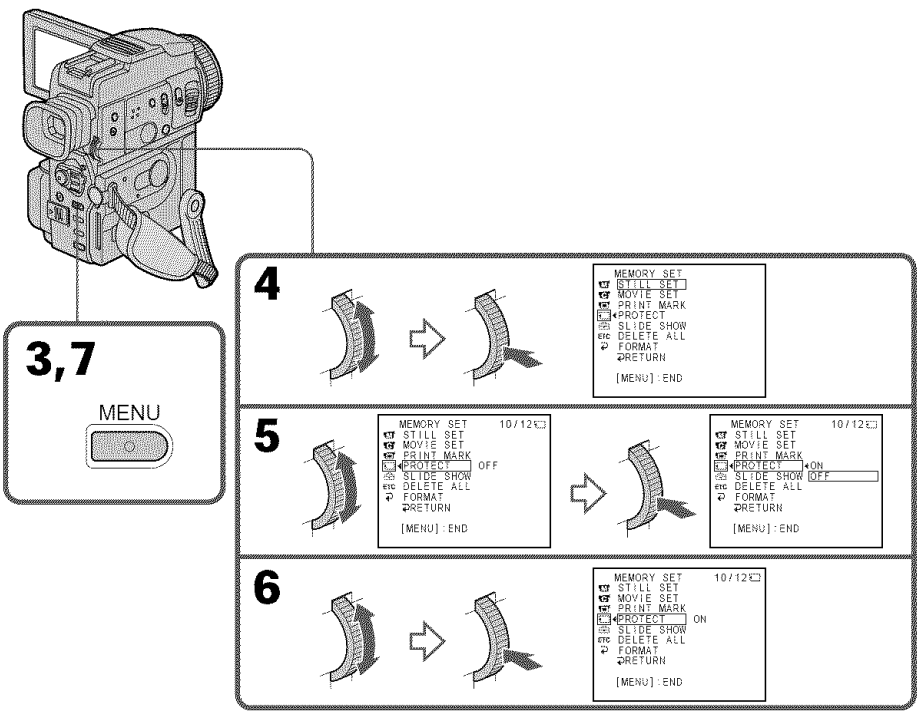

To cancel image protection

Select OFF in step 6, then press the SEL/PUSH EXEC dial.

Note

Formatting erases all information on the "Memory Stick," including the protected image data. Check the contents of the "Memory Stick" before formatting.

If the write-protect tab on the "Memory Stick" is set to LOCK

You cannot carry out image protection.

Deleting images

You can delete images stored in a "Memory Stick." You can delete all images or selected images.

Deleting selected images

Before operation
Insert a "Memory Stick" into your camcorder.

(1) Set the POWER switch to MEMORY or VCR. Make sure that the LOCK switch is set to the right (unlock) position.
(2) Select the image you want to delete.
(3) Press MEMORY DELETE. "DELETE?" appears on the LCD screen or in the viewfinder.
(4) Press MEMORY DELETE again. The selected image is deleted.

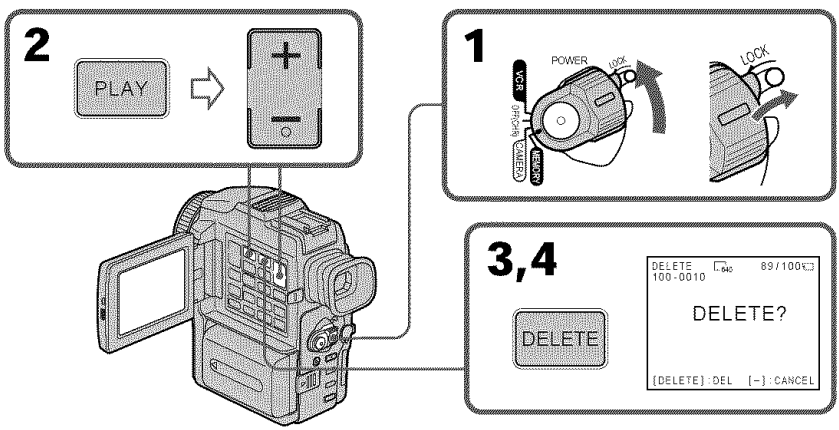

To cancel deleting an image
Press MEMORY – in step 4.

To delete an image displayed on the index screen
Press MEMORY +/– to move the ▶ indicator to the desired image you want to delete and follow steps 3 and 4.

Notes
- To delete a protected image, first cancel image protection.
- Once you delete an image, you cannot restore it. Check the images to delete carefully before deleting them.

If the write-protect tab on the "Memory Stick" is set to LOCK
You cannot delete images.

Deleting all the images

You can delete all the unprotected images in a "Memory Stick."

Before operation
Insert a "Memory Stick" into your camcorder.

(1) Set the POWER switch to MEMORY. Make sure that the LOCK switch is set to the right (unlock) position.
(2) Press MENU to display the menu.
(3) Turn the SEL/PUSH EXEC dial to select [ ], then press the dial.
(4) Turn the SEL/PUSH EXEC dial to select DELETE ALL, then press the dial.
(5) Turn the SEL/PUSH EXEC dial to select OK, then press the dial. OK changes to EXECUTE.
(6) Turn the SEL/PUSH EXEC dial to select EXECUTE, then press the dial. DELETING appears on the LCD screen or in the viewfinder. When all the unprotected images are deleted, COMPLETE is displayed.

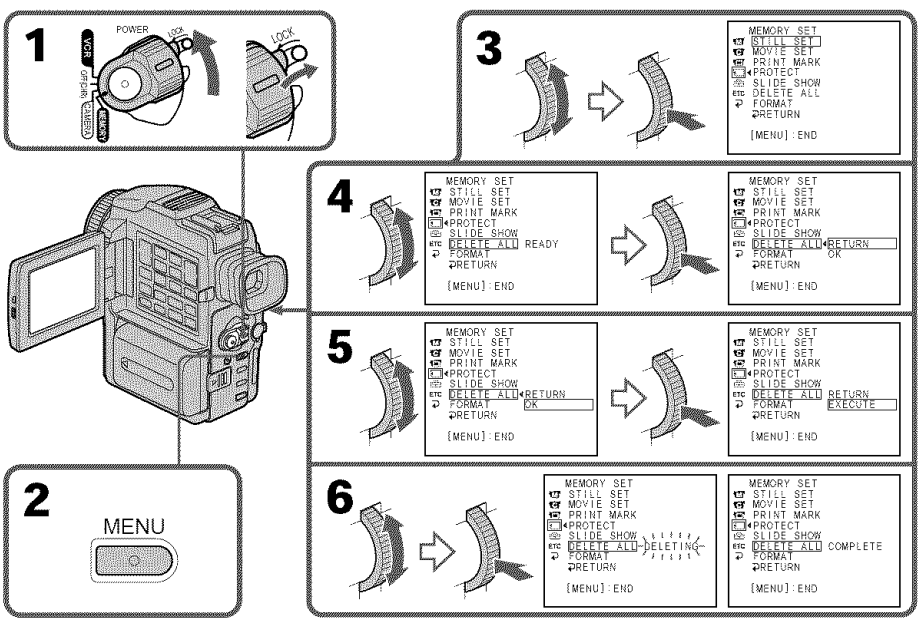

To cancel deleting all the images in the "Memory Stick"

Select RETURN in step 5, then press the SEL/PUSH EXEC dial.

While DELETING appears
Do not turn the POWER switch or press any buttons.

Writing a print mark – PRINT MARK

You can specify the recorded still image to print out by putting marks. This function is useful for printing out still images later.
Your camcorder conforms with the DPOF (Digital Print Order Format) standard for specifying the still images to print out.

Before operation
Insert a "Memory Stick" into your camcorder.

(1) Set the POWER switch to MEMORY or VCR. Make sure that the LOCK switch is set to the right (unlock) position.
(2) Select the still image you want to write a print mark on.
(3) Press MENU to display the menu.
(4) Turn the SEL/PUSH EXEC dial to select , then press the dial.
(5) Turn the SEL/PUSH EXEC dial to select PRINT MARK, then press the dial.
(6) Turn the SEL/PUSH EXEC dial to select ON, then press the dial.
(7) Press MENU to make the menu display disappear. The print mark " " is displayed beside the data file name of the image.

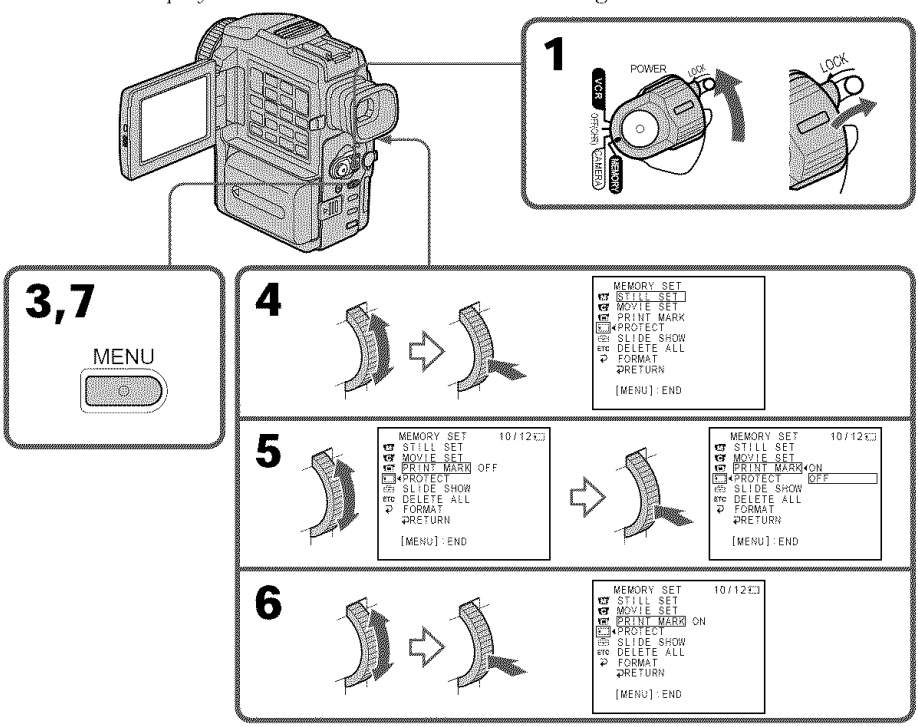

To cancel writing print marks

Select OFF in step 6, then press the SEL/PUSH EXEC dial.

If the write-protect tab on the "Memory Stick" is set to LOCK
You cannot write print marks on still images.

Moving pictures
You cannot write print marks on moving pictures.

Usable cassettes

Selecting cassette types

You can use the Mini DV mini DV cassette only*. You cannot use any other 8 8 mm, Hi8 Hi8, Digital8 Digital8, VHS VHS, VHSC VHSC, S-VHS S-VHS, S-VHSC S-VHSC, Betamax Betamax, ED Beta ED Betamax or DV DV cassette.

* There are two types of mini DV cassettes: with cassette memory and without cassette memory. Tapes with cassette memory have CM (Cassette Memory) mark.
We recommend that you use the tape with cassette memory.

The IC memory is mounted on this type of mini DV cassette. Your camcorder can read and write data such as dates of recording or titles, etc. to this memory.
The functions using the cassette memory require successive signals recorded on the tape. If the tape has a blank portion in the beginning or between the recorded portions, a title may not be displayed properly or the search functions may not work properly. Not to make any blank portion on the tape, operate the followings.
Press END SEARCH to go to the end of the recorded portion before you begin the next recording if you operate the followings:
– you have ejected the cassette while recording.
– you have played back the tape in the VCR.
If there is a blank portion or discontinuous signal on your tape, re-record from the beginning to the end of the tape concerning above.
The same result may occur when you record using a digital video camera recorder without a cassette memory function on a tape recorded by one with the cassette memory function.

CM 4K mark on the cassette

The memory capacity of tapes marked with CM 4K is 4KB. Your camcorder can accommodate tapes having a memory capacity of up to 16KB. 16KB tape is marked with CM 16K.

Mini DV Digital Video Cassette This is the mini DV mark.

CM Cassette Memory This is the Cassette Memory mark.

These are trademarks.

Copyright signal

When you play back

Using any other video camera recorder, you cannot record on tape that has recorded a copyright control signals for copyright protection of software which is played back on your camcorder.

When you record

You cannot record software on your camcorder that contains copyright control signals for copyright protection of software.
"COPY INHIBIT" appears on the LCD screen, in the viewfinder or on the TV screen if you try to record such software.
Your camcorder does not record copyright control signals on the tape when it records.

Audio mode

12-bit mode: The original sound can be recorded in stereo 1, and the new sound in stereo 2 in 32 kHz. The balance between stereo 1 and stereo 2 can be adjusted by selecting AUDIO MIX in the menu settings during playback. Both sounds can be played back.
16-bit mode: A new sound cannot be recorded but the original sound can be recorded in high quality. Moreover, it can also play back sound recorded in 32 kHz, 44.1 kHz or 48 kHz. When playing back a tape recorded in the 16-bit mode, 16BIT indicator appears on the LCD screen or in the viewfinder.

When you play back a dual sound track tape

When you play back a dual sound track tape recorded in a stereo system, set HiFi SOUND to the desired mode in the menu settings (p. 84).

Sound from speaker

HiFi SOUND mode	Playing back a stereo tape	Playing back a dual sound track tape
STEREO	Stereo	Main sound and sub sound
1	Left sound	Main sound
2	Right sound	Sub sound

You cannot record dual sound programs on your camcorder.

Notes on the mini DV cassette

When affixing a label on the mini DV cassette

Be sure to affix a label only on the locations as illustrated below **[a]** so as not to cause malfunction of your camcorder.

After using the mini DV cassette

Rewind the tape to the beginning, put the cassette in its case, and store it in an upright position.

When the cassette memory function does not work

Reinsert a cassette. The gold-plated connector of mini DV cassettes may be dirty or dusty.

Cleaning gold-plated connector

If the gold-plated connector of mini DV cassettes is dirty or dusty, you may not operate the function using cassette memory. Clean up the gold-plated connector with cotton-wool swab, about every 10 times ejection of a cassette. **[b]**

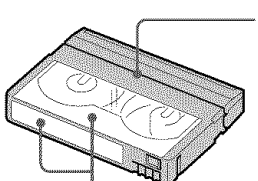

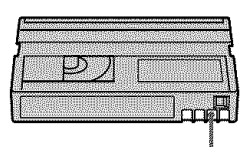

About i.LINK

The DV jack on this unit is an i.LINK-compliant DV input/output jack. This section describes the i.LINK standard and its features.

What is i.LINK?

i.LINK is a digital serial interface for handling digital video, digital audio and other data in two directions between equipment having the i.LINK jack, and for controlling other equipment.
i.LINK-compatible equipment can be connected by a single i.LINK cable. Possible applications are operations and data transactions with various digital AV equipment.
When two or more i.LINK-compatible equipment are connected to this unit in a daisy chain, operations and data transactions are possible with not only the equipment that this unit is connected to but also with other devices via the directly connected equipment.
Note, however, that the method of operation sometimes varies according to the characteristics and specifications of the equipment to be connected, and that operations and data transactions are sometimes not possible on some connected equipment.

Note

Normally, only one piece of equipment can be connected to this unit by the i.LINK cable (DV cable). When connecting this unit to i.LINK-compatible equipment having two or more i.LINK jacks (DV jacks), refer to the instruction manual of the equipment to be connected.

About the Name "i.LINK"

i.LINK is a more familiar term for IEEE 1394 data transport bus proposed by SONY, and is a trademark approved by many corporations.
IEEE 1394 is an international standard standardized by the Institute of Electrical and Electronic Engineers.

i.LINK Baud rate

i.LINK's maximum baud rate varies according to the equipment. Three maximum baud rates are defined:
S100 (approx. 100Mbps*)
S200 (approx. 200Mbps)
S400 (approx. 400Mbps)

The baud rate is listed under "Specifications" in the instruction manual of each equipment. It is also indicated near the i.LINK jack on some equipment.
The maximum baud rate of equipment on which it is not indicated such as this unit is "S100".
When units are connected to equipment having a different maximum baud rate, the baud rate sometimes differs from the indicated baud rate.

***What is Mbps?**

Mbps stands for megabits per second, or the amount of data that can be sent or received in one second. For example, a baud rate of 100Mbps means that 100 megabits of data can be sent in one second.

i.LINK functions on this unit

For details on how to dub when this unit is connected to other video equipment having DV jacks, see page 57, 70.
This unit can also be connected to other i.LINK (DV) compatible equipment made by SONY (e.g. VAIO series personal computer) other than video equipment.
Before connecting this unit to a personal computer, make sure that application software supported by this unit is already installed on the personal computer.
For details on precautions when connecting this unit, also refer to the instruction manuals for the equipment to be connected.

Required i.LINK Cable

Use the Sony i.LINK 4-pin-to-4-pin cable (during DV dubbing).

i.LINK and i are trademarks.

Troubleshooting

If you run into any problem using your camcorder, use the following table to troubleshoot the problem. If the problem persists, disconnect the power source and contact your Sony dealer or local authorized Sony service facility. If "C:□□:□□" appears on the LCD screen or in the viewfinder, the self-diagnosis display function has worked. See page 148.

In the recording mode

Symptom	Cause and/or Corrective Actions
START/STOP does not operate.	• The POWER switch is not set to CAMERA. → Set it to CAMERA. (p. 15) • The tape has run out. → Rewind the tape or insert a new one. (p. 14, 26) • The write-protect tab is set to expose the red mark. → Use a new tape or slide the tab. (p. 14) • The tape is stuck to the drum (moisture condensation). → Remove the cassette and leave your camcorder for at least one hour to acclimatize. (p. 152)
The power goes off.	• While being operated in CAMERA mode, your camcorder has been in the standby mode for more than 5 minutes. → Set the POWER switch to OFF (CHG) and then to CAMERA again. (p. 15) • The battery pack is dead or nearly dead. → Install a charged battery pack. (p. 10)
The image on the viewfinder screen is not clear.	• The viewfinder lens is not adjusted. → Adjust the viewfinder lens. (p. 18)
The SteadyShot function does not work.	• STEADYSHOT is set to OFF in the menu settings. → Set it to ON. (p. 84)
The autofocusing function does not work.	• The setting is the manual focus mode. → Press FOCUS to set to the auto focus mode. (p. 45) • Shooting conditions are not suitable for autofocus. → Adjust to focus manually. (p. 45)
The picture does not appear in the viewfinder.	• The LCD panel is open. → Close the LCD panel. (p. 17)
A vertical band appears when you shoot a subject such as lights or a candle flame against a dark background.	• The contrast between the subject and background is too high. Your camcorder is not a malfunction.
A vertical band appears when you shoot a very bright subject.	• Your camcorder is not a malfunction.
Some tiny white spots appear on the LCD screen or in the viewfinder.	• Slow shutter, low lux or Super NightShot mode is activated. This is not a malfunction.
An unknown picture is displayed on the LCD screen or in the viewfinder.	• If 10 minutes elapse after you set the POWER switch to CAMERA or DEMO MODE is set to ON in the menu settings without a cassette inserted, your camcorder automatically starts the demonstration. → Insert a cassette and the demonstration stops. You can also cancel DEMO MODE. (p. 90)

Symptom	Cause and/or Corrective Actions
The picture is recorded in incorrect or unnatural colors.	• NIGHTSHOT is set to ON. → Set it to OFF. (p. 21)
Picture appears too bright, and the subject does not appear on the LCD screen or in the viewfinder.	• NIGHTSHOT is set to ON in a bright place. → Set it to OFF. (p. 21)
The click of the shutter does not sound.	• BEEP is set to OFF in the menu settings. → Set it to MELODY or NORMAL. (p. 84)
Black bands appear when you record TV or computer screen.	→ Set the STEADYSHOT in the menu settings to OFF. (p. 84)
An external flash (not supplied) does not work.	• The POWER switch is set to OFF (CHG) or the power source does not installed. → Set it to CAMERA or install the power source. • Two or more external flashes (not supplied) are attached. → Only one external flash (not supplied) can be attached.

In the playback mode

Symptom	Cause and/or Corrective Actions
The tape does not move when a video control button is pressed.	• The POWER switch is not set to VCR. → Set it to VCR. (p. 24)
The playback button does not work.	• The tape has run out. → Rewind the tape. (p. 26)
There are horizontal lines on the picture or the playback picture is not clear or does not appear.	• The video head may be dirty. → Clean the heads using the cleaning cassette (not supplied). (p. 153)
No sound or only a low sound is heard when playing back a tape.	• The volume is turned to minimum. → Turn up the volume. (p. 24) • AUDIO MIX is set to ST2 in the menu settings. → Adjust AUDIO MIX. (p. 84)
Displaying the recorded date, date search function does not work.	• The tape has no cassette memory. → Use a tape with cassette memory. (p. 52) • CM SEARCH is set to OFF in the menu settings. → Set it to ON. (p. 84) • The tape has a blank portion in the recorded portion. (p. 53)
The title search function does not work.	• The tape has no cassette memory. → Use a tape with cassette memory. (p. 51) • CM SEARCH is set to OFF in the menu settings. → Set it to ON. (p. 84) • There is no title in the tape. → Superimpose the titles. (p. 77) • The tape has a blank portion in the recorded portion. (p. 51)
The new sound added to the recorded tape is not heard.	• AUDIO MIX is set to ST1 side in the menu settings. → Adjust AUDIO MIX. (p. 84)
The title is not displayed.	• TITLE DSPL is set to OFF in the menu settings. → Set it to ON. (p. 84)

(continued on the following page)

In the recording and playback modes

Symptom	Cause and/or Corrective Actions
The power does not turn on.	• The battery pack is not installed, or is dead or nearly dead. → Install a charged battery pack. (p. 10, 11) • The AC power adaptor is not connected to a wall outlet. → Connect the AC power adaptor to a wall outlet. (p. 13)
The end search function does not work.	• The tape was ejected after recording when using a tape without cassette memory. (p. 23) • You have not recorded on the new cassette yet. (p. 23)
The end search function does not work correctly.	• The tape has a blank portion in the beginning or middle.
The battery pack is quickly discharged.	• The operating temperature is too low. • The battery pack is not fully charged. → Charge the battery pack fully again. (p. 11) • The battery pack is completely dead, and cannot be recharged. → Replace with a new battery pack. (p. 10)
The battery remaining indicator does not indicate the correct time.	• You have used the battery pack in an extremely hot or cold environment for a long time. • The battery pack is completely dead, and cannot be recharged. → Replace with a new battery pack. (p. 10) • The battery is not fully charged. → Charge the battery pack fully again. (p. 11)
The cassette cannot be removed from the holder.	• The power source is disconnected. → Connect it firmly. (p. 10, 13) • The battery is dead. → Use a charged battery pack. (p. 10, 11)
The ◘ and ⏏ indicators flash and no functions except for cassette ejection work.	• Moisture condensation has occurred. → Remove the cassette and leave your camcorder for at least one hour to acclimatize. (p. 152)
CM indicator does not appear when using a tape with cassette memory.	• The gold-plated connector of the tape is dirty or dusty. → Clean the gold-plated connector. (p. 139)
Remaining tape indicator is not displayed.	• The REMAIN is set to AUTO in the menu settings. → Set it to ON to always display the remaining tape indicator. (p. 84)

When operating using the "Memory Stick"

Symptom	Cause and/or Corrective Actions
The "Memory Stick" does not function.	• The POWER switch is not set to MEMORY. → Set it to MEMORY. (p. 96) • The "Memory Stick" is not inserted. → Insert a "Memory Stick". (p. 95)
Recording does not function.	• The "Memory Stick" has already been recorded to its full capacity. → Delete unnecessary images and record again. (p. 135) • The "Memory Stick" formatted incorrectly is inserted. → Format the "Memory Stick" or use another "Memory Stick. " (p. 88) • The write-protect tab on the "Memory Stick" is set to LOCK. → Release the lock. (p. 93)
The image cannot be deleted.	• The image is protected. → Cancel image protection. (p. 134) • The write-protect tab on the "Memory Stick" is set to LOCK. → Release the lock. (p. 93)
You cannot format the "Memory Stick".	• The write-protect tab on the "Memory Stick" is set to LOCK. → Release the lock. (p. 93)
Deleting all the images cannot be carried out.	• The write-protect tab on the "Memory Stick" is set to LOCK. → Release the lock. (p. 93)
You cannot protect the image.	• The write-protect tab on the "Memory Stick" is set to LOCK. → Release the lock. (p. 93) • The image to protect is not be played back. → Press MEMORY PLAY to play back the image. (p. 120)
You cannot write a print mark on the still image.	• The write-protect tab on the "Memory Stick" is set to LOCK. → Release the lock. (p. 93) • The image to write a print mark is not be played back. → Press MEMORY PLAY to play back the image. (p. 120)
The photo save function does not work.	• The write-protect tab on the "Memory Stick" is set to LOCK. → Release the lock. (p. 93)

(continued on the following page)

Others

Symptom	Cause and/or Corrective Actions
The title is not recorded.	• The tape has no cassette memory. → Use a tape with cassette memory. (p. 77) • The cassette memory is full. → Erase unnecessary title. (p. 79) • The tape is set to prevent accidental erasure. → Slide the write-protect tab so that red portion is not visible. (p. 14) • The tape has a blank portion in the recorded portion. → Superimpose the title to the recorded position. (p. 77)
The cassette label is not recorded.	• The tape has no cassette memory. → Use a tape with cassette memory. (p. 82) • The cassette memory is full. → Erase unnecessary data. (p. 83) • The tape is set to prevent accidental erasure. → Slide the write-protect tab so that red portion is not visible. (p. 14)
Digital program editing does not function.	• The input selector on the VCR is not set correctly. → Check the connection and set the input selector on the VCR again. (p. 58) • The camcorder is connected to DV equipment of other than Sony. → Set it to IR. (p. 59) • Setting program on a blank portion of the tape is attempted. → Set the PROGRAM again on a recorded portion. (p. 66) • The camcorder and the VCR are not synchronized. → Adjust the synchronicity. (p. 64)
The Remote Commander supplied with your camcorder does not work.	• COMMANDER is set to OFF in the menu settings. → Set it to ON. (p. 84) • Something is blocking the infrared rays. → Remove the obstacle. • The batteries are inserted in the battery holder with the + – polarities incorrectly matching the + – marks. → Insert the batteries with the correct polarity. (p. 164) • The batteries are dead. → Insert new ones. (p. 164)
The picture from a TV or VCR does not appear even when your camcorder is connected to output on the TV or VCR.	• Display is set to V-OUT/LCD in the menu settings. → Set it to LCD. (p. 84)

Symptom	Cause and/or Corrective Actions
The melody or beep sounds for 5 seconds.	• Moisture condensation has occurred. → Remove the cassette and leave your camcorder for at least one hour to acclimatize. (p. 152) • Some troubles has occurred in your camcorder. → Remove the cassette and insert it again, then operate your camcorder.
While charging the battery pack, the CHARGE lamp doesn't flash.	• Charging is completed. (p. 11) • The battery pack is not properly installed. → Install it properly. • Something is wrong with the battery pack. → Contact your Sony dealer or local authorized Sony service facility.
You cannot charge the battery pack.	• The POWER switch is not set to OFF (CHG). → Set it to OFF (CHG).
While charging the battery pack, the CHARGE lamp flashes.	• The battery pack is not properly installed. → Install it properly. • Something is wrong with the battery pack. → Contact your Sony dealer or local authorized Sony service facility.
The power goes off although the battery remaining indicator indicates that the battery pack has enough power to operate.	• Charge the battery pack fully again so that the indication on the battery remaining indicator is correct.
No function works though the power is on.	• Disconnect the power cord of the AC power adaptor or remove the battery, then reconnect it in about one minute. Turn the power on. If the functions still do not work, open the LCD panel and press the RESET button under S VIDEO jack using a sharp-pointed object. (If you press the RESET button, all the settings including the date and time return to the default.) (p. 161)
When you set the POWER switch to VCR or OFF (CHG), if you move your camcorder, you may hear a clatter sound from inside your camcorder.	• Your camcorder is not a malfunction.

Self-diagnosis display

Your camcorder has a self-diagnosis display function.
This function displays the current condition of your camcorder as a 5-digit code (a combination of a letter and figures) in the viewfinder or on the LCD screen. If a 5-digit code is displayed, check the following code chart. The last 2 digits (indicated by □□) will differ depending on the state of your camcorder.

LCD screen or Viewfinder

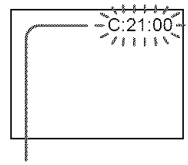

Self-diagnosis display

- C:□□:□□
  You can service your camcorder yourself.
- E:□□:□□
  Contact your Sony dealer or local authorized Sony facility.

Five-digit display	Cause and/or Corrective Actions
C:04:□□	• You are using a battery pack that is not an "InfoLITHIUM" battery pack. ➔ Use an "InfoLITHIUM" battery pack.
C:21:□□	• Moisture condensation has occurred. ➔ Remove the cassette and leave your camcorder for at least one hour to acclimatize. (p. 152)
C:22:□□	• The video heads are dirty. ➔ Clean the heads using the cleaning cassette (not supplied). (p. 153)
C:31:□□ C:32:□□	• A malfunction other than the above that you can service has occurred. ➔ Remove the cassette and insert it again, then operate your camcorder. ➔ Disconnect the power cord of the AC power adaptor or remove the battery pack. After reconnecting the power source, operate your camcorder.
E:61:□□ E:62:□□ E:91:□□	• A malfunction that you cannot service has occurred. ➔ Contact your Sony dealer or local authorized Sony service facility and inform them of the 5-digit code. (example: E:61:10)

If you are unable to rectify the problem even if you try corrective actions a few times, contact your Sony dealer or local authorized Sony service facility.

Warning indicators and messages

If indicators and messages appear in the viewfinder or the LCD screen, check the following:
See the page in parentheses "( )" for more information.

Warning indicators

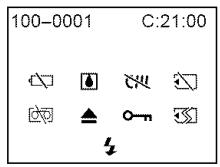

100-0001 **Warning indicator as to file**
Slow flashing:
- The file is corrupted.
- The file is unreadable.
- You are trying to carry out MEMORY MIX function on moving picture.

C:21:00 **Self-diagnosis display** (p. 148).

The battery is dead or nearly dead
Slow flashing:
- The battery is nearly dead.
  Depending on conditions and battery pack models, the indicator may flash, even if there are approximately 5 to 10 minutes remaining.

Fast flashing:
- The battery is dead (p. 11).

Moisture condensation has occurred*
Fast flashing:
- Eject the cassette, turn off your camcorder, and leave it for about 1 hour with the cassette compartment open (p. 152).

Warning indicator as to cassette memory*
Slow flashing:
- No tape with cassette memory is inserted (p. 138).

Warning indicator as to "Memory Stick"*
Slow flashing:
- No "Memory Stick" is inserted.

Fast flashing:
- The "Memory Stick" is not readable with your camcorder (p. 93).
- The image cannot be recorded on "Memory Stick" (p. 114).

Warning indicator as to "Memory Stick" formatting
Fast flashing:
- "Memory Stick" is not formatted correctly (p. 88).
- The "Memory Stick" data is corrupted.*

Warning indicator as to tape
Slow flashing:
- The tape is near the end.
- No tape is inserted.*
- The write-protect tab on the cassette is out (red) (p. 14).*

Fast flashing:
- The tape has run out.*

You need to eject the cassette*
Slow flashing:
- The write-protect tab on the cassette is out (red) (p. 14).

Fast flashing:
- Moisture condensation has occurred (p. 152).
- The tape has run out.
- The self-diagnosis display function is activated (p. 148).

The still image is protected*
Slow flashing:
- The still image is protected (p. 134).

Warning indicator as to the flash
Slow flashing:
- During charging.

Fast flashing:
- The self-diagnosis display function is activated (p. 148).*
- There is something wrong with the built-in flash or the external flash (not supplied).

* You hear the melody or beep sound.

Warning messages

• CLOCK SET	Reset the date and time (p. 92).
• FOR "InfoLITHIUM" BATTERY ONLY	Use an "InfoLITHIUM" battery pack (p. 12).
• CLEANING CASSETTE**	The video heads are dirty (p. 153).
• FULL	The tape cassette memory is full.
• 16BIT	AUDIO MODE is set to 16BIT (p. 89).* You cannot dub new sound.
• REC MODE	REC MODE is set to LP (p. 89).* You cannot dub new sound.
• TAPE	There is no recorded portion on the tape. You cannot dub new sound.
• "i.LINK" CABLE	i.LINK cable is connected (p. 76).* You cannot dub new sound.
• FULL	The "Memory Stick" is full (p. 104).*
•	The write-protect tab on the "Memory Stick" is set to LOCK (p. 93).*
• NO FILE	No still image is recorded on the "Memory Stick" (p. 120).*
• NO MEMORY STICK	No "Memory Stick" is inserted.
• AUDIO ERROR	You are trying to record an image with sound that cannot be reocrded by your camcorder on "Memory Stick (p. 113)."*
• MEMORY STICK ERROR	The "Memory Stick" data is corrupted (p. 95).
• FORMAT ERROR	The "Memory Stick" is not recognized. Check the format (p. 88).
• DIRECTORY ERROR	There is more than two same directions (p. 120).
• COPY INHIBIT	The tape contains copyright control signals for copyright protection of software (p. 138).*
• TAPE END	The tape has reached the end of the tape.*
• NO TAPE	Insert a cassette tape.*

* You hear the melody or beep sound.
** The ⊗ indicator and " CLEANING CASSETTE" message appear one after another on the LCD screen or in the viewfinder.

Using your camcorder abroad

Using your camcorder abroad

You can use your camcorder in any country or area with the AC power adaptor supplied with your camcorder within 100 V to 240 V AC, 50/60 Hz.

When charging the battery pack, use a commercially available AC plug adaptor **[a]**, if necessary, depending on the design of the wall outlet **[b]**.

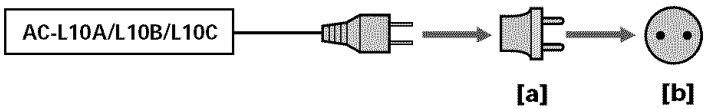

Your camcorder is an NTSC system based camcorder. If you want to view the playback picture on a TV, it must be an NTSC system based TV with the AUDIO/VIDEO input jack.
The following shows TV color systems used overseas.

NTSC system
Bahama Islands, Bolivia, Canada, Central America, Chile, Colombia, Ecuador, Jamaica, Japan, Korea, Mexico, Peru, Surinam, Taiwan, the Philippines, the U.S.A., Venezuela, etc.

PAL system
Australia, Austria, Belgium, China, Czech Republic, Denmark, Finland, Germany, Great Britain, Holland, Hong Kong, Italy, Kuwait, Malaysia, New Zealand, Norway, Portugal, Singapore, Slovak Republic, Spain, Sweden, Switzerland, Thailand, etc.

PAL-M system
Brazil

PAL-N system
Argentina, Paraguay, Uruguay

SECAM system
Bulgaria, France, Guyana, Hungary, Iran, Iraq, Monaco, Poland, Russia, Ukraine, etc.

Simple setting of clock by time difference

You can easily set the clock to the local time by setting a time difference. Select WORLD TIME in the menu settings. See page 84 for more information.

Maintenance information and precautions

Moisture condensation

If your camcorder is brought directly from a cold place to a warm place, moisture may condense inside your camcorder, on the surface of the tape, or on the lens. In this condition, the tape may stick to the head drum and be damaged or your camcorder may not operate correctly. If there is moisture inside your camcorder, the beep sounds and the 💧 indicator flashes. When the ⏏ indicator flashes at the same time, the cassette is inserted in your camcorder. If moisture condenses on the lens, the indicator will not appear.

If moisture condensation occurred

None of the functions except cassette ejection will work. Eject the cassette, turn off your camcorder, and leave it for about one hour with the cassette compartment open. Your camcorder can be used again if the 💧 indicator does not appear when the power is turned on again.

Note on moisture condensation

Moisture may condense when you bring your camcorder from a cold place into a warm place (or vice versa) or when you use your camcorder in a hot place as follows:

- You bring your camcorder from a ski slope into a place warmed up by a heating device.
- You bring your camcorder from an air-conditioned car or room into a hot place outside.
- You use your camcorder after a squall or a shower.
- You use your camcorder in a high temperature and humidity place.

How to prevent moisture condensation

When you bring your camcorder from a cold place into a warm place, put your camcorder in a plastic bag and tightly seal it. Remove the bag when the air temperature inside the plastic bag has reached the surrounding temperature (after about one hour).

Maintenance information

Cleaning the video head

To ensure normal recording and clear pictures, clean the video heads. The video head may be dirty when:

- mosaic-pattern noise appears on the playback picture.
- playback pictures do not move.
- playback pictures do not appear.
- the ⊗ indicator and "CLEANING CASSETTE" message appear one after another or the ⊗ indicator flashes on the LCD screen or in the viewfinder.

If the above problem, **[a]** or **[b]** occurs, clean the video heads for 10 seconds with the Sony DVM-12CLD cleaning cassette (not supplied). Check the picture and if the above problem persists, repeat cleaning.

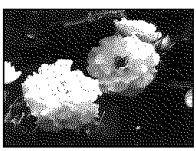

[a]

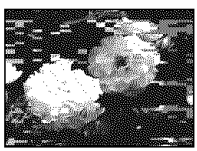

or

[b]

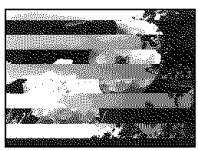

Cleaning the LCD screen

If fingerprints or dust make the LCD screen dirty, we recommend using a LCD Cleaning Kit (not supplied) to clean the LCD screen.

Charging the manganese-lithium battery in your camcorder

Your camcorder is supplied with a manganese-lithium battery installed so as to retain the date and time, etc., regardless of the setting of the POWER switch. The manganese-lithium battery is always charged as long as you are using your camcorder. The battery, however, will get discharged gradually if you do not use your camcorder. It will be completely discharged in about 3 months if you do not use your camcorder at all. Even if the manganese-lithium battery is not charged, it will not affect the camcorder operation. To retain the date and time, etc., charge the battery if the battery is discharged.

Charging the manganese-lithium battery:

- Connect your camcorder to house current using the AC power adaptor supplied with your camcorder, and leave your camcorder with the POWER switch turned off for more than 24 hours.
- Or install the fully charged battery pack in your camcorder, and leave your camcorder with the POWER switch turned off for more than 24 hours.

Precautions

Camcorder operation

- Operate your camcorder on 7.2 V (battery pack) or 8.4 V (AC power adaptor).
- For DC or AC operation, use the accessories recommended in this operating instructions.
- If any solid object or liquid get inside the casing, unplug your camcorder and have it checked by a Sony dealer before operating it any further.
- Avoid rough handling or mechanical shock. Be particularly careful of the lens.
- Keep the POWER switch set to OFF (CHG) when you are not using your camcorder.
- Do not wrap your camcorder with a towel, for example, and operate it. Doing so might cause heat to build up inside.
- Keep your camcorder away from strong magnetic fields or mechanical vibration.
- Do not touch the LCD screen with your fingers or a sharp-pointed object.
- If your camcorder is used in a cold place, a residual image may appear on the LCD screen. This is not a malfunction.
- While using your camcorder, the back of the LCD screen may heat up. This is not a malfunction.

On handling tapes

- Do not insert anything into the small holes on the rear of the cassette. These holes are used to sense the type and thickness of the tape and if the recording tab is in or out.
- Do not open the tape protect cover or touch the tape.
- Avoid touching or damaging the terminals. To remove dust, clean the terminals with a soft cloth.

Camcorder care

- Remove the tape, and periodically turn on the power, operate the CAMERA and VCR sections and play back a tape for about 3 minutes when your camcorder is not to be used for a long time.
- Clean the lens with a soft brush to remove dust. If there are fingerprints on the lens, remove them with a soft cloth.
- Clean the camcorder body with a dry soft cloth, or a soft cloth lightly moistened with a mild detergent solution. Do not use any type of solvent which may damage the finish.
- Do not let sand get into your camcorder. When you use your camcorder on a sandy beach or in a dusty place, protect it from the sand or dust. Sand or dust may cause your camcorder to malfunction, and sometimes this malfunction cannot be repaired.

AC power adaptor

- Unplug the unit from the wall outlet when you are not using the unit for a long time. To disconnect the power cord, pull it out by the plug. Never pull the power cord itself.
- Do not operate the unit with a damaged cord or if the unit has been dropped or damaged.
- Do not bend the power cord forcibly, or place a heavy object on it. This will damage the cord and may cause fire or electrical shock.
- Prevent metallic objects from coming into contact with the metal parts of the connecting section. If this happens, a short may occur and the unit may be damaged.
- Always keep metal contacts clean.
- Do not disassemble the unit.
- Do not apply mechanical shock or drop the unit.
- While the unit is in use, particularly during charging, keep it away from AM receivers and video equipment. AM receivers and video equipment disturb AM reception and video operation.
- The unit becomes warm during use. This is not a malfunction.
- Do not place the unit in locations that are:
  - Extremely hot or cold
  - Dusty or dirty
  - Very humid
  - Vibrating

Battery pack

- Use only the specified charger or video equipment with the charging function.
- To prevent accident from a short circuit, do not allow metal objects to come into contact with the battery terminals.
- Keep the battery pack away from fire.
- Never expose the battery pack to temperatures above 140°F (60°C), such as in a car parked in the sun or under direct sunlight.
- Keep the battery pack dry.
- Do not expose the battery pack to any mechanical shock.
- Do not disassemble nor modify the battery pack.
- Attach the battery pack to the video equipment securely.
- Charging while some capacity remains does not affect the original battery capacity.

Notes on dry batteries

To avoid possible damage from battery leakage or corrosion, observe the following:
- Be sure to insert the batteries with the + – polarities matched to the + – marks.
- Dry batteries are not rechargeable.
- Do not use a combination of new and old batteries.
- Do not use different types of batteries.
- Current flows from batteries when you are not using them for a long time.
- Do not use leaking batteries.

If batteries are leaking

- Wipe off the liquid in the battery compartment carefully before replacing the batteries.
- If you touch the liquid, wash it off with water.
- If the liquid get into your eyes, wash your eyes with a lot of water and then consult a doctor.

If any problem occurs, unplug your camcorder and contact your nearest Sony dealer.

Specifications

Video camera recorder

System

Video recording system
2 rotary heads
Helical scanning system
Audio recording system
Rotary heads, PCM system
Quantization: 12 bits (Fs 32 kHz, stereo 1, stereo 2), 16 bits (Fs 48 kHz, stereo)
Video signal
NTSC color, EIA standards
Usable cassette
Mini DV cassette with the Mini DV mark printed
Tape speed
SP: Approx. 18.81 mm/s
LP: Approx. 12.56 mm/s
Recording/playback time (using cassette DVM60)
SP: 1 hour
LP: 1.5 hours
Fastforward/rewind time (using cassette DVM60)
Approx. 2 min. and 30 seconds
Viewfinder
Electric viewfinder (color)
Image device
1/4 type CCD (Charge Coupled Device)
Approx. 1,070,000 pixels
(Effective (still): 1,000,000 pixels)
(Effective (moving): 690,000 pixels)
Lens
Carl Zeiss Vario-Sonnar T*
Combined power zoom lens
Filter diameter: 1 1/2 in (37 mm)
10× (Optical), 120× (Digital)
Focal length
3/16 - 1 11/16 in. (4.2 - 42 mm)
When converted to a 35 mm still camera
Camera mode:
1 15/16 - 19 in. (48 - 480 mm)
Memory mode:
1 5/8 - 15 3/4 in. (40 - 400 mm)
Color temperature
Auto, HOLD (Hold), Indoor (3200K), Outdoor (5800K)
Minimum illumination
7 lux (F 1.8)
0 lux (in the NightShot mode)*
* Objects unable to be seen due to the dark can be shot with infrared lighting.

Input/Output connectors

S video input/output
4-pin mini DIN
Luminance signal: 1 Vp-p, 75 ohms, unbalanced
Chrominance signal: 0.286 Vp-p, 75 ohms, unbalanced
Audio/Video input/output
AV MINI JACK, 1 Vp-p, 75 ohms, unbalanced, sync negative
327 mV, (at output impedance more than 47 kilohms)
Output impedance with less than 2.2 kilohms/Stereo minijack
(ø 3.5mm)
Input impedance more than 47 kilohms
DV input/output
4-pin connector
Headphone jack
Stereo minijack (ø 3.5 mm)
LANC jack
Stereo mini-minijack
(ø 2.5 mm)
USB jack
mini-B
MIC jack
Minijack, 0.388 mV low impedance with 2.5 to 3.0 V DC, output impedance 6.8 kilohms
(ø 3.5 mm)
Stereo type

LCD screen

Picture
2.5 type
2 × 1 1/2 in. (49.9 × 37.3 mm)
Total dot number
200,640 (880 × 228)

General

Power requirements
7.2 V (battery pack)
8.4 V (AC power adaptor)
Average power consumption (when using the battery pack)
During camera recording using LCD
4.2 W
Viewfinder
3.6 W
Operating temperature
32 °F to 104 °F (0 °C to 40 °C)
Storage temperature
–4 °F to +140 °F
(–20 °C to +60 °C)
Dimensions (Approx.)
2 3/8 × 4 7/8 × 4 7/8 in.
(60 × 122 × 122 mm) (w/h/d)
Mass (approx.)
1 lb 4 oz (590 g)
main unit only
1 lb 8 oz (690 g)
including the battery pack, NP-FM50, cassette DVM60, lens cap and shoulder strap
Supplied accessories
See page 5.

AC power adaptor

Power requirements
100 - 240 V AC, 50/60 Hz
Power consumption
23 W
Output voltage
DC OUT: 8.4 V, 1.5 A in the operating mode
Operating temperature
32 °F to 104 °F (0 °C to 40 °C)
Storage temperature
-4 °F to +140 °F (-20 °C to +60 °C)
Dimensions (approx.)
5 × 1 9/16 × 2 1/2 in.
(125 × 39 × 62 mm) (w/h/d)
excluding projecting parts
Mass (approx.)
9.8 oz (280 g)
excluding mains lead
Cord length (approx.)
Power cord: 6.6 feet (2 m)
Connecting cord: 5.2 feet (1.6 m)

Battery pack

Output voltage
DC 7.2 V
Capacity
8.5 Wh (1,180 mA)
Dimensions (approx.)
1 9/16 × 13/16 × 2 1/4 in.
(38.2 × 20.5 × 55.6 mm)
(w/h/d)
Mass (approx.)
2.7 oz (76 g)
Type
Lithium ion

"Memory Stick"

Memory
Flash memory
4MB: MSA-4A
Operating voltage
2.7-3.6V
Power consumption
Approx. 45mA in the operating mode
Approx. 130μA in the standby mode
Dimensions (approx.)
2 × 1/8 × 7/8 in.
(50 × 2.8 × 21.5 mm) (w/h/d)
Mass (approx.)
0.14 oz (4 g)

Design and specifications are subject to change without notice.

Identifying the parts and controls

Camcorder

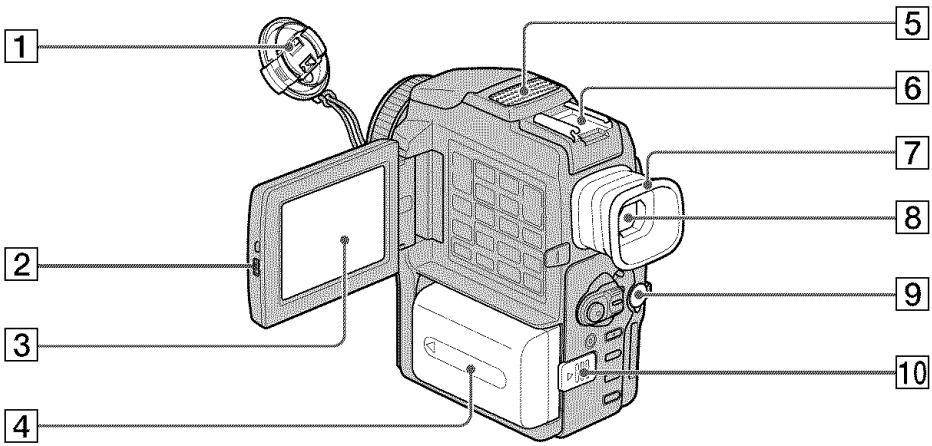

1 **Lens Cap** (p. 15)

2 **OPEN button** (p. 15)

3 **LCD screen** (p. 16)

4 **Battery pack/Battery terminal cover** (p. 10)

5 **Microphone**

6 **Intelligent accessory shoe** (p. 73)

7 **Eyecup**

8 **Viewfinder** (p. 18)

9 **AUDIO/VIDEO ID-2 jack** (p. 27, 33, 56, 110)

10 **BATTERY RELEASE lever** (p. 10)

This mark indicates that this product is a genuine accessory for Sony video products.
When purchasing Sony video products, Sony recommends that you purchase accessories with this "GENUINE VIDEO ACCESSORIES" mark.

Intelligent Accessory Shoe

Notes on the intelligent accessory shoe

- The intelligent accessory shoe supplies power to optional accessories such as a video light or microphone.
- The intelligent accessory shoe is linked to the POWER switch, allowing you to turn the power supplied by the shoe on and off. Refer to the operating instructions of the accessory for further information.
- The intelligent accessory shoe has a safety device for fixing the installed accessory securely. To connect an accessory, press down and push it to the end, and then tighten the screw.
- To remove an accessory, loosen the screw, and then press down and pull out the accessory.

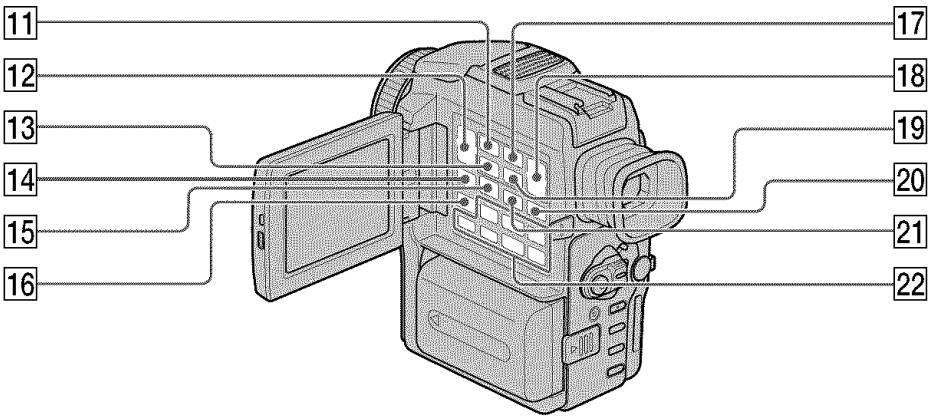

11 **MEMORY PLAY button** (p. 120)

12 **VOLUME buttons** (p. 24)

13 **MEMORY INDEX button** (p. 121)

14 **DISPLAY button** (p. 25)

15 **MPEG ►II/PB ZOOM button** (p. 49, 123)

16 **END SEARCH button** (p. 23)

17 **MEMORY DELETE button** (p. 135)

18 **MEMORY +/– buttons** (p. 120)

19 **MEMORY MIX button** (p. 115)

20 **DIGITAL EFFECT button** (p. 39, 48)

21 **TITLE button** (p. 77)

22 **Video control buttons** (p. 26)
- ■ STOP (stop)
- ◄◄ REW (rewind)
- ► PLAY (playback)
- ►► FF (fastforward)
- II PAUSE (pause)
- ● REC (record)

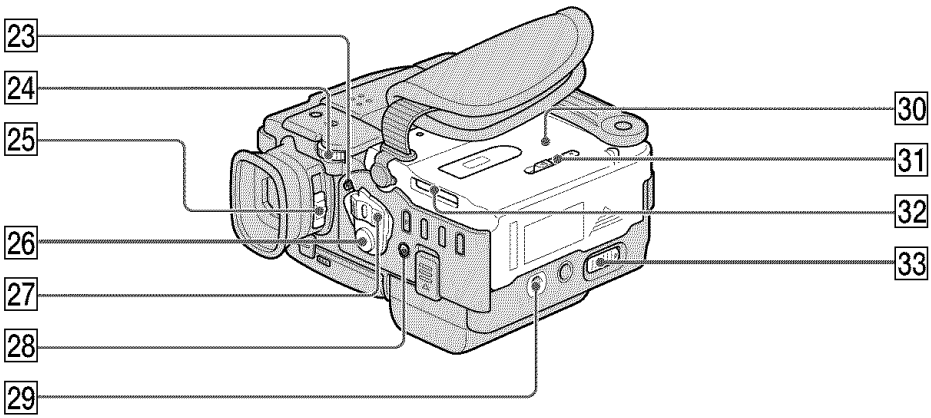

23 **LOCK switch** (p. 15)

24 **SEL/PUSH EXEC dial** (p. 84)

25 **Viewfinder lens adjustment lever** (p. 18)

26 **START/STOP button** (p. 15)

27 **POWER switch** (p. 15)

28 **⚡ (flash) button** (p. 30, 105)

29 **Tripod receptacle**
Make sure that the length of the tripod screw is less than 9/32 inch (6.5 mm). Otherwise, you cannot attach the tripod securely and the screw may damage your camcorder.

30 **Cassette compartment** (p. 14)

31 **MEMORY RELEASE lever** (p. 95)

32 **"Memory Stick" slot** (p. 95)

33 **OPEN/⏏ EJECT lever** (p. 14)

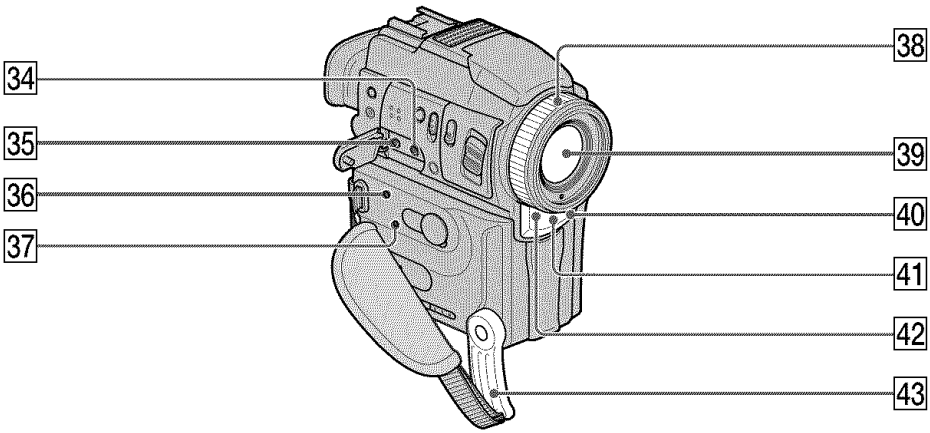

34 **MIC (PLUG IN POWER) jack**
Connect an external microphone (not supplied). This jack also accepts a "plug-in-power" microphone.

35 **(headphones) jack**
When you use headphones, the speaker on your camcorder is silent.

36 **Access lamp** (p. 95)

37 **RESET button** (p. 147)

38 **Focus ring** (p. 45)

39 **Lens**

40 **Camera recording lamp** (p. 15)

41 **Infrared rays emitter** (p. 21, 28, 61)

42 **Remote sensor**

43 **Holdind Grip**

About the Holding Grip

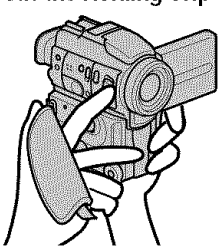

Hold the Holding Grip firmly as illustrated.

Note on the Carl Zeiss lens
Your camcorder is equipped with a Carl Zeiss lens which can reproduce a fine image.
The lens for your camcorder was developed jointly by Carl Zeiss, in Germany, and Sony Corporation. It adopts the MTF# measurement system for video camera and offers a quality as the Carl Zeiss lens.
The lenz for your camcorder is also T*-coated to suppress unwanted reflection and faithfully reproduce colors.

MTF is an abbreviation of Modulation Transfer Function.
The value number indicates the amount of light of a subject penetrating into the lens.

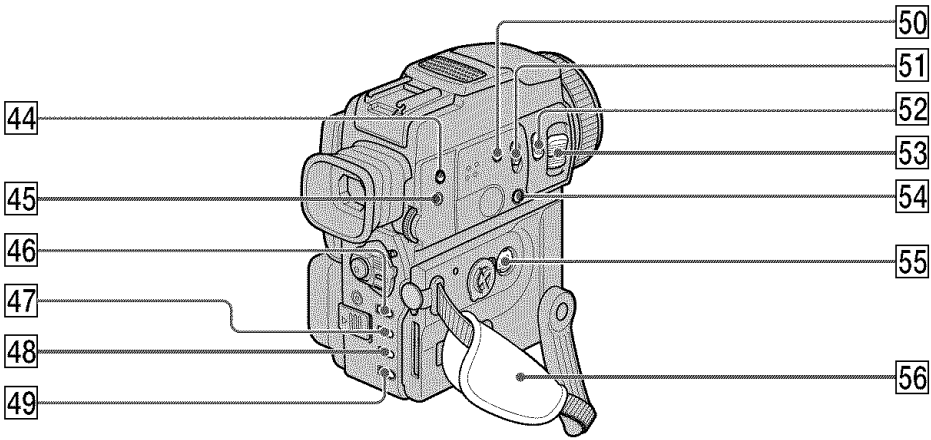

44 ⏲ **(self-timer) button** (p. 22, 107)

45 **SUPER LASER LINK button** (p. 28)

46 **MENU button** (p. 84)

47 **EXPOSURE button** (p. 44)

48 **FADER button** (p. 37)

49 **BACK LIGHT button** (p. 20)

50 **SUPER NIGHTSHOT button** (p. 21)

51 **NIGHTSHOT switch** (p. 21)

52 **PHOTO button** (p. 29, 102)

53 **Power zoom lever** (p. 19)

54 **FOCUS switch** (p. 45)

55 **S VIDEO jack** (p. 27, 33, 56, 114)

56 **Grip strap**

Fastening the grip strap

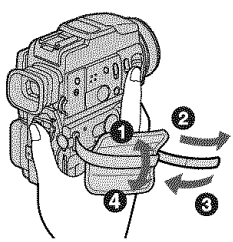

Fasten the grip strap firmly.

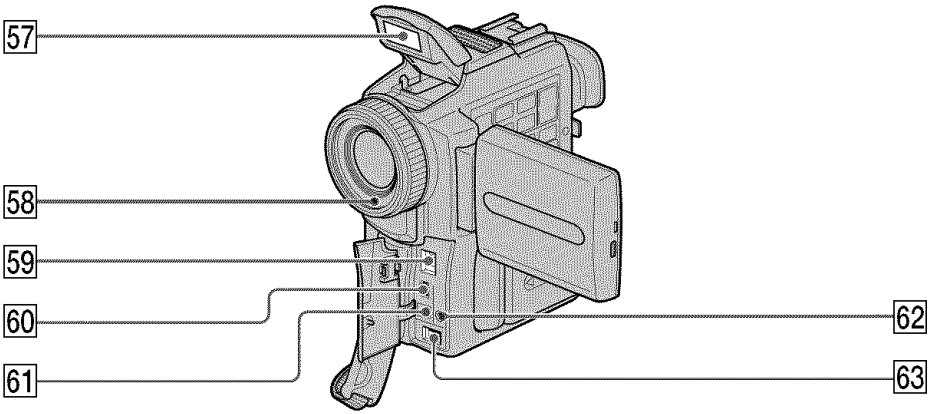

57 **Flash** (p. 30, 105)

58 **Photocell window for flash**
Do not block this window when recording.

59 **DV IN/OUT jack** (p. 57, 114)

60 **(USB) jack** (p. 126)

61 **CHARGE lamp** (p. 11)

62 **LANC jack**

63 **DC IN jack** (p. 11)

Remote Commander

The buttons that have the same name on the Remote Commander as on your camcorder function identically to the buttons on your camcorder.

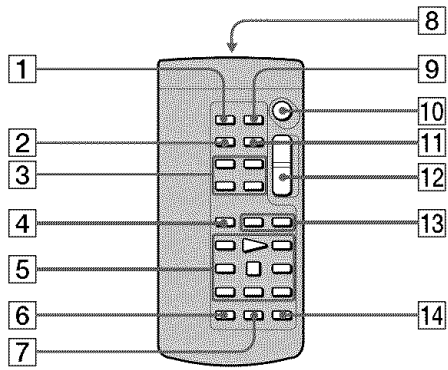

1 **PHOTO button** (p. 29, 102)
2 **DISPLAY button** (p. 25)
3 **Memory control buttons** (p. 120)
4 **SEARCH MODE button** (p. 54)
5 **Video control buttons** (p. 26)
6 **REC button** (p. 15)
7 **MARK button** (p. 66)
8 **Transmitter**
Point toward the remote sensor to control your camcorder after turning on your camcorder.
9 **ZERO SET MEMORY button** (p. 50)
10 **START/STOP button** (p. 15)
11 **DATA CODE button** (p. 25)
12 **Power zoom button** (p. 19)
13 **⏮/⏭ buttons** (p. 54)
14 **AUDIO DUB button** (p. 75)

To prepare the Remote Commander

Insert two size AA (R6) batteries by matching the + and – polarities on the batteries to the + – marks inside the battery compartment.

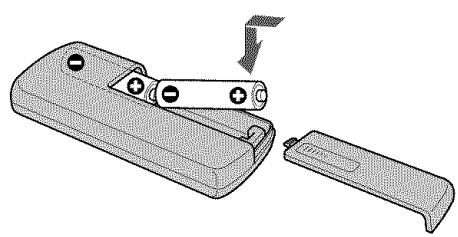

Notes on the Remote Commander

- Point the remote sensor away from strong light sources such as direct sunlight or overhead lighting. Otherwise, the Remote Commander may not function properly.
- Your camcorder works in the commander mode VTR 2. Commander modes 1, 2 and 3 are used to distinguish your camcorder from other Sony VCRs to avoid remote control misoperation. If you use another Sony VCR in the commander mode VTR 2, we recommend changing the commander mode or covering the sensor of the VCR with black paper.

Operation indicators

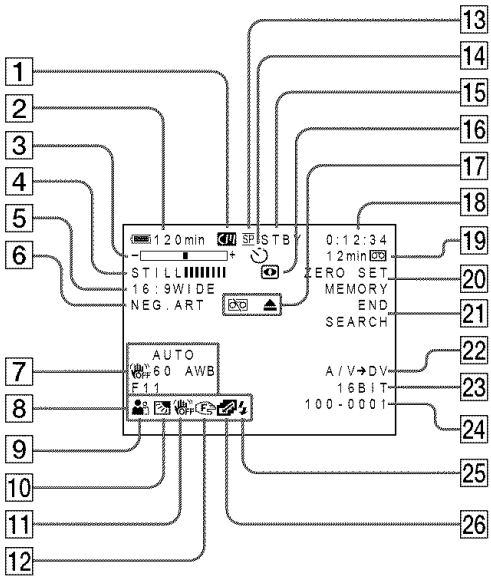

1 **Cassette memory indicator** (p. 20, 138)

2 **Remaining battery time indicator** (p. 20)

3 **Zoom indicator** (p. 19)**/Exposure indicator** (p. 44)**/Data file name indicator** (p. 93)

4 **Digital effect indicator** (p. 39)**/ MEMORY MIX indicator** (p. 115)**/ FADER indicator** (p. 36)

5 **16:9WIDE indicator** (p. 35)

6 **Picture effect indicator** (p. 38)

7 **Data code indicator** (p. 25)

8 **Volume indicator** (p. 24)**/Date indicator** (p. 20)

9 **PROGRAM AE indicator** (p. 42)

10 **Backlight indicator** (p. 20)

11 **SteadyShot off indicator** (p. 85)

12 **Manual focus/Infinity indicator** (p. 45)

13 **Recording mode indicator** (p. 20, 89)

14 **Self-timer indicator** (p. 22)

15 **STBY/REC indicator** (p. 15)**/Video control mode indicator** (p. 26)**/Image size indicator** (p. 98)**/Image quality mode indicator** (p. 96)

16 **NIGHTSHOT indicator** (p. 21)

17 **Warning indicators** (p. 149)

18 **Tape counter indicator** (p. 50)**/Time code indicator** (p. 20)**/Self-diagnosis indicator** (p. 148)**/Tape photo indicator** (p. 29)**/Memory photo indicator** (p. 102)**/Image number indicator** (p. 121)

19 **Remaining tape indicator** (p. 20)**/ Memory playback indicator** (p. 121)

20 **ZERO SET MEMORY indicator** (p. 50)

21 **END SEARCH indicator** (p. 23)

22 **A/V → DV indicator** (p. 68)**/DV IN indicator** (p. 70)

23 **Audio mode indicator** (p. 89)

24 **Data file name indicator** (p. 116)**/Time indicator** (p. 20)
This indicator appears when the MEMORY MIX functions work.

25 **Flash indicator**
This indicator appears only when the flash is in use.

26 **Continuous mode indicator** (p. 103)

Quick Function Guide

Functions to adjust exposure (in the recording mode)

• In a dark place	NIGHTSHOT (p. 21)
• In insufficient light	Low lux mode (p. 42)
• In dark environments such as sunset, fireworks, or general night views	Sunset & moon mode (p. 42)
• Shooting backlit subjects	BACK LIGHT (p. 20)
• In spotlight, such as at the theater or a formal event	Spotlight mode (p. 42)
• In strong light or reflected light, such as at a beach in midsummer or on a ski slope	Beach & ski mode (p. 42)

Functions to give images more impact (in the recording mode)

• Smooth transition between scenes	FADER (p. 36)
• Taking a still picture	Tape photo recording (p. 29)/ Memory photo recording (p. 102)
• Digital processing of images	PICTURE EFFECT (p. 38)/ DIGITAL EFFECT (p. 39)
• Creating a soft background for subjects	Soft portrait mode (p. 42)
• Superimposing a title	TITLE (p. 77)

Functions to give a natural appearance to your recordings (in the recording mode)

• Preventing deterioration of picture quality in digital zoom	D ZOOM [MENU] (p. 84)
• Focusing manually	Manual focus (p. 45)
• Shooting distant subjects	Landscape mode (p. 42)
• Recording fast-moving subjects	Sports lesson mode (p. 42)

Functions to be used in editing (in the recording mode)

• Watching the picture on a wide-screen TV	Wide mode (p. 35)
• Viewing images using a personal computer	"Memory Stick" (p. 93)

Functions to be used after recording (in the playback mode)

• Digital processing of recorded images	PICTURE EFFECT (p. 47)/ DIGITAL EFFECT (p. 48)
• Displaying the date/time or various settings when you recorded	Data code (p. 25)
• Quickly locating a desired scene	Zero set memory (p. 50)
• Searching for scenes having a title	Title search (p. 51)
• Searching for scenes recorded in the photo mode	Photo search (p. 54)
• Scanning scenes recorded in the photo mode	Photo scan (p. 55)
• Playing back monaural sound or sub sound	HiFi SOUND [MENU] (p. 86)
• Playing back the picture on a TV without connecting cord	SUPER LASER LINK (p. 28)
• Enlarging still images	PB ZOOM (p. 49)

Index

A, B

AC power adaptor 11
Adjusting viewfinder 18
Audio dubbing 73
AUDIO MIX 86
Audio mode 89
Auto red-eye reduction .. 30, 105
AUTO SHTR 85
A/V connecting cable
..... 27, 33, 56, 110
BACK LIGHT 20
Battery pack 10
BEEP 91

C, D

Camera chromakey 115
Cassette memory 8, 138
Charging battery 11
Charging manganese-lithium
battery 153
Clock set 92
Connection
(viewing on TV) 27
(dubbing a tape) 56, 57
Continuous 103
Data code 25
Date search 52
DEMO 90
DIGITAL EFFECT 39, 48
Digital program editing 58
DISPLAY 25
DOT 36
Dual sound track tape 139
Dubbing a tape 56
DV connecting cable
..... 57, 110

E

END SEARCH 23
Exposure 44
External microphone
(not supplied) 161

F, G, H

FADER 36
Fade in/out 36
Flash 30, 105
FLASH MOTION 39
FOCUS 45
Format 88, 93
Full charge 11
Grip strap 162
(Headphone) jack 161
Heads 153
HiFi SOUND 86
Holding Grip 6, 161

I, J, K, L

i.LINK 140
Image protection 134
Image quality mode 96
Image size 98
INDEX (Multiple) display ... 121
"InfoLITHIUM" battery 12
Infrared rays emitter ... 21, 28, 61
Insert editing 71
Intelligent accessory shoe 158
JPEG 93
Labeling a cassette 82
LANC jack 163
LCD screen 16
LUMINANCEKEY 39

M, N

Main sound 139
Manual focus 45
Memory chromakey 115
Memory luminancekey 115
MEMORY MIX 115
Memory PB ZOOM 132
Memory photo recording
..... 102
"Memory Stick" 93
Menu settings 84
Memory overlap 115
Mirror mode 16
Moisture condensation 152
MONOTONE 36
MPEG 93
MPEG movie recording 111
NIGHTSHOT 21
Normal charge 11
NTSC system 151

O, P, Q

OLD MOVIE 39
Operation indicators 165
OVERLAP 36, 115
Photo save 118
Photo scan 55
Photo search 54
PICTURE EFFECT 38, 47
Picture search 26
Playback pause 26
Power sources
(house current) 13
(car battery) 13
(battery pack) 10
Power zoom 19
Print mark 137
PROGRAM AE 42

R

Recording time 12
Remaining battery time
indicator 20
Remaining tape indicator 20
Remote Commander 164
Remote sensor 161
RESET 147

S

S video jack 27, 33, 56, 110
Self-diagnosis display 148
Self-timer recording
..... 22, 32, 107
SEL/PUSH EXEC dial 84
Signal convert function 68
Skip scan 26
Slide show 133
Slow playback 26
SLOW SHUTTER 39
STEADYSHOT 85
Stereo tape 139
STILL 39
Sub sound 139
SUPER LASER LINK 28
SUPER NIGHTSHOT 21

T, U, V

Tape counter 20
Tape PB ZOOM 49
Tape photo recording 29
Telephoto 19
Time code 20
Title 77
Title search 51
TRAIL 39
Transition 16
TV color systems 151
USB jack 126

W, X, Y, Z

Warning indicators 149
White balance 34
Wide-angle 19
Wide mode 35
WIPE 36
WORLD TIME 91
Write-protect tab 14
Zero set memory 50, 71
Zoom 19

Sony on line http://www.world.sony.com/

Sony Corporation Printed in Japan

Printed on recycled paper