Installation Instructions

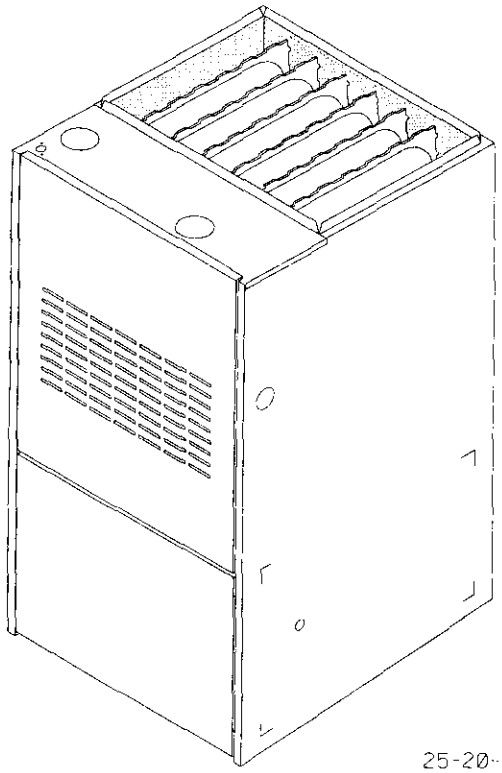

- Safety Rules
- Installation
- Ventilation Air
- Vent & Combustion Piping
- Gas Supply & Piping
- Wiring
- Ductwork Connections
- Start–Up
- Maintenance

WARNING

This furnace is not designed for use in mobile homes, trailers or recreational vehicles. Such use could result in property damage, bodily injury and/or death.

DESIGN AMERICAN GAS ASSOCIATION CERTIFIED
Design Certified by A.G.A.

APPROVED

EFFICIENCY RATING CERTIFIED Gama

Manufactured by:
Inter-City Products Corporation (USA)
Lavergne, TN USA 37086

NUGM Series

Condensing Gas Furnace

Printed in U.S.A.

LP1 1008854 3/8/94

Table of Contents

1. Safety Labeling and Signal Words 3
Danger, Warning and Caution 3
Danger Label 3
Warning Label 3
Caution Label 3
2. Safe Installation Requirements 4
3. Installation 6
Dual Certified Furnace 6
Location and Clearances 6
Installation Requirements 6
False Floor Closet Installation 9
4. Combustion & Ventilation Air 10
Venting and Combustion Air Check 10
Air Openings and Connecting Ducts 10
Confined Space Installation 10
Requirements 10
Unconfined Space Installation 12
Unusually Tight Construction 12
Ventilation Air 12
5. Vent and Combustion Air Piping 13
Dual Certified Furnace 13
Contaminated Combustion Air 13
Vent and Combustion Air Piping Guidelines 13
Piping Insulation Guidelines 14
Sizing Combustion Air and Vent Pipe 14
Vent Termination Clearances 16
Condensate Drain Trap and Neutralizer 16
Connecting Furnace and Piping 16
Vent Pipe Connection 17
Air Inlet Pipe Connection 17
Joining Pipe and Fittings 18
Connecting Vent Pipes and Termination 18
Vertical Termination 18
Horizontal Termination 18
Using Exterior Risers 19
Optional Vent Screens 19
Vent Termination Shielding 19
6. Gas Supply and Piping 20
Supply Pressure 20
General U.S. Derating Rules 20
General Canadian Derating Rules 20
Manifold Gas Pressure Adjustment 20
High Altitude Air Pressure Switch 21
Changing Orifices for High Altitude 21
Natural Gas Input Rating Check 21
Gas Piping Requirements 22
Connections 22
Additional LP Connection Requirements 22
Final Check 23
Startup 23
7. Electrical Wiring 24
Grounding 24
Polarizing 24
Labeling 24
Power Supply 24
Thermostat 24
Heat Anticipator 24
Optional Equipment 25
Humidifier/Electronic Air Cleaner 25
Wiring for Air Conditioning 25
Fan Control 25
8. Ductwork and Filter 26
Installation 26
Connections 26
Sizing 26
Insulation 26
Filters 26
Filter Installation 27
Addition Of Air Conditioning 27
9. Checks and Adjustments 29
Main Burner Flame Check 29
Pilot Burner Flame Check 29
Limit Control Check 29
Fan Control Check 30
Temperature Rise Check 30
Continuous Fan Operation 31
Separate speed selections for Heat, Cool, and Continuous Fan 31
Heating and Continuous Blower Speed the Same 31
10. Furnace Maintenance 32
Filters 32
Replacement 32
Blower Motor 32
Furnace Inspection 32
Vent Pipe 32
Return Air Duct 32
Furnace Base 32
Furnace Interior 33
Pilot Burners 33
Main Burners 33
Condensate Disposal 33
11. Cleaning Heat Exchangers 34
Primary Heat Exchanger 34
Accessing 34
Cleaning 34
Secondary Heat Exchanger 34
Accessing 34
Exterior Cleaning 34
Accessing Interior of Secondary Heat Exchanger 34
Interior Cleaning 34
Cleaning Burners 35
Reassembly 35
12. Glossary of Terms 36
13. Appendix of Helpful Information 37
Canadian Codes 37
Applicable Natural Gas and Propane Codes 37
Applicable Electrical Codes 37
United States Codes 37
Applicable Natural Gas and Propane Codes 37
Applicable Electrical Codes 37

1. Safety Labeling and Signal Words

Danger, Warning and Caution

The signal words **DANGER, WARNING** and **CAUTION** are used to identify levels of hazard seriousness. The signal word **DANGER** is only used on product labels to signify an immediate hazard. The signal words **WARNING** and **CAUTION** will be used on product labels and throughout this manual and other manuals that may apply to the product.

DANGER
Immediate hazards which **WILL** result in ***severe personal injury or death.***

Danger Label

White lettering on a black background except the word **DANGER** which is white with a red background.

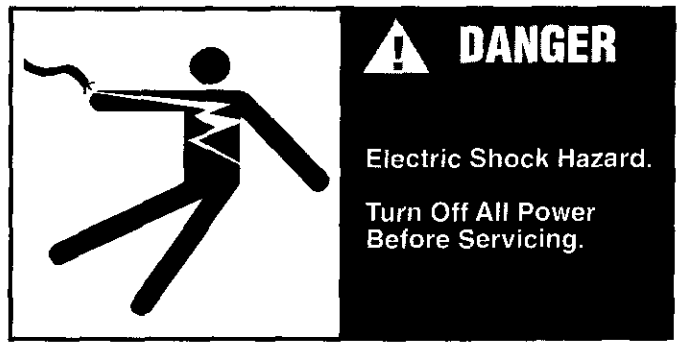

WARNING
Hazards or unsafe practices which **COULD** result in ***severe personal injury or death.***

The signal word **WARNING** is used throughout this manual in the following manner:

WARNING

Warning Label

White lettering on a black background except the word **WARNING** which is black with an orange background.

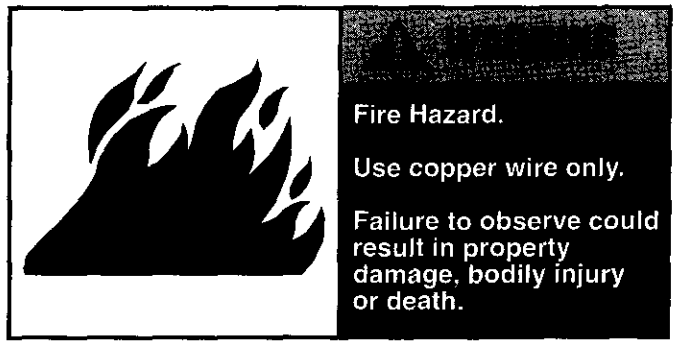

CAUTION
Hazards or unsafe practices which **COULD** result in ***minor personal injury or product or property damage.***

The signal word **CAUTION** is used throughout this manual in the following manner:

CAUTION

Caution Label

White lettering on a black background except the word **CAUTION** which is black with a yellow background.

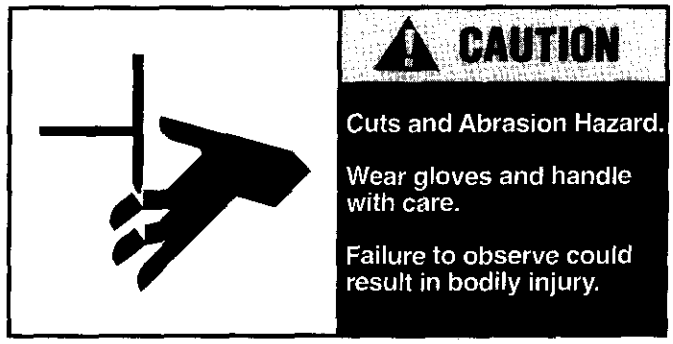

2. Safe Installation Requirements

WARNING

Installation or repairs made by unqualified persons can result in hazards to you and others. Installation MUST conform with local codes or, in the absence of local codes, with codes of the country having jurisdiction. See Appendix.

The information contained in this manual is intended for use by a qualified service technician familiar with safety procedures and equipped with the proper tools and test instruments.

Failure to carefully read and follow all instructions in this manual can result in furnace malfunction, property damage, personal injury and/or death.

NOTE: This furnace is design certified by the American Gas Association and the Canadian Gas Association for installation in the United States and Canada. Refer to the appropriate codes, along with this manual, for proper installation.

- **This furnace is NOT approved for installation in mobile homes, trailers or recreation vehicles.**
- Do **NOT** use this furnace as a construction heater.
- Use only the Type of gas approved for this furnace (see **Rating Plate** on unit). Overfiring will result in failure of heat exchanger and cause dangerous operation.
- Do **NOT** use open flame to test for gas leak.
- Ensure adequate combustion and ventilation air is provided to the furnace.
- Seal supply and return air ducts.
- The vent system **MUST** be checked to determine that it is the correct type and size.
- Install correct filter type and size.
- Unit **MUST** be installed so electrical components are protected from direct contact with water.

NOTE: It is the personal responsibility and obligation of the customer to contact a qualified installer to ensure that the installation is adequate and conforms to governing codes and ordinances.

WARNING

Carbon Monoxide Poisoning Hazard.

This furnace can NOT be common vented or connected to any type B, BW or L vent or vent connector, nor to any portion of a factory–built or masonry chimney. If this furnace is replacing a previously common-vented furnace, it may be necessary to resize the existing vent line and chimney to prevent oversizing problems for the other remaining appliance(s). See applicable codes in appendix and *Venting and Combustion Air Check* in *Gas Vent Installation* section. This furnace MUST be vented to the outside.

Failure to properly vent this furnace or other appliances can result in property damage, personal injury and/or death.

START–UP CHECK SHEET

(Keep this page for future reference)

Dealer Name:_____

Address:_____

City, State(Province), Zip or Postal Code:_____

_____

Phone:_____

Business Card Here

Owner Name:_____

Address:_____

City, State(Province), Zip or Postal Code:_____

_____

Model Number:_____

Serial Number:_____

Type of Gas: Natural: ❐ LP: ❐

Blower Motor H.P.:_____

Supply Voltage:_____

Limit Opens at...(°F)_____or(°C)_____

Limit Closes at...(°F)_____or(°C)_____

Which blower speed tap is used?
(Heating)_____ (Cooling)_____

Temperature of Supply Air: (°F)_____or(°C)_____

Temperature of Return Air: (°F)_____or(°C)_____

Rise (Supply Temp – Return Temp): (°F)____or(°C)____

Filter Type and Size:_____

Fan "Time **ON**" Setting:_____

Fan "Time **OFF**" Setting:_____

Manual Gas Shut–Off Upstream of Furnace/Drip–Leg? YES ❐ NO ❐

Drip–Leg Upstream of Gas Valve? YES ❐ NO ❐

Condensate Drain Connected? YES ❐ NO ❐

Blower Speed Checked? YES ❐ NO ❐

All Electrical Connections Tight? YES ❐ NO ❐

Gas Valve OK? YES ❐ NO ❐

Measured Line Pressure When Firing Unit:_____

Calculated Firing Rate:(See *Checks and Adjustments* Section).

Measured Manifold Pressure:_____

Thermostat OK? YES ❐ NO ❐

Subbase Level? YES ❐ NO ❐

Anticipator Set? YES ❐ NO ❐ Set At?:_____

Breaker On? YES ❐ NO ❐

Date of Installation:_____

Date of Start–Up:_____

Dealer Comments:_____

_____

_____

_____

3. Installation

NOTE: Installation **MUST** conform with local building codes and local plumbing and waste water codes, or in the absence of local codes, with codes of the country having jurisdiction. See Appendix.

Dual Certified Furnace

This furnace is dual certified. This means that the **INLET** pipe is optional. See **Figure 1** for identification of **INLET** and **OUTLET** pipe. Combustion air can be drawn from outside the structure or inside the structure. If drawing combustion air from inside the structure, adequate make up air **MUST** be provided to compensate for oxygen burned. See ***Confined Space Installation*** in the ***Combustion and Ventilation Air*** chapter.

Location and Clearances

1. Refer to **Figure 1** for typical direct vent or non–direct vent installation and basic connecting parts required. Supply and return air plenums and duct are also required.

2. If furnace is a replacement, it is usually best to install the furnace where the old one was. Choose the location or evaluate the existing location based upon the minimum clearance and furnace dimensions (**Figure 2**).

CAUTION

Special precautions MUST be made if installing furnace in an area which may drop below freezing. This can cause improper operation or damage to equipment. If furnace environment has the potential of freezing, the drain trap and blower must be protected with antifreeze. Disconnect the rubber coupling on top of furnace and pour 8 onces of sanitary type (RV) antifreeze into the vent pipe to protect the blower and drain trap from freeze damage.

Do NOT operate furnace in a contaminated atmosphere containing chlorine, fluorine or any other damaging chemicals. Refer to *Combustion & Ventilation Air section, Contaminated Combustion Air*.

Installation Requirements

1. Install furnace level.

2. This furnace is **NOT** to be used for temporary heat of buildings or structures under construction.

3. Install furnace as centralized as practical with respect to the heat distribution system.

4. Install the vent pipes as short as practical. (See ***Vent and Combustion Air Piping*** section).

5. Maintain clearance for fire safety and servicing. A front clearance of 30″ (762mm) is recommended for access to the burner, controls and filter.

6. Use a raised base if the floor is damp or wet at times.

7. Residential garage installations require:

   - Burners and ignition sources installed at least 18 inches(457mm) above the floor.

   - Located or physically protected from possible damage by a vehicle.

Figure 1 **Typical Installation**

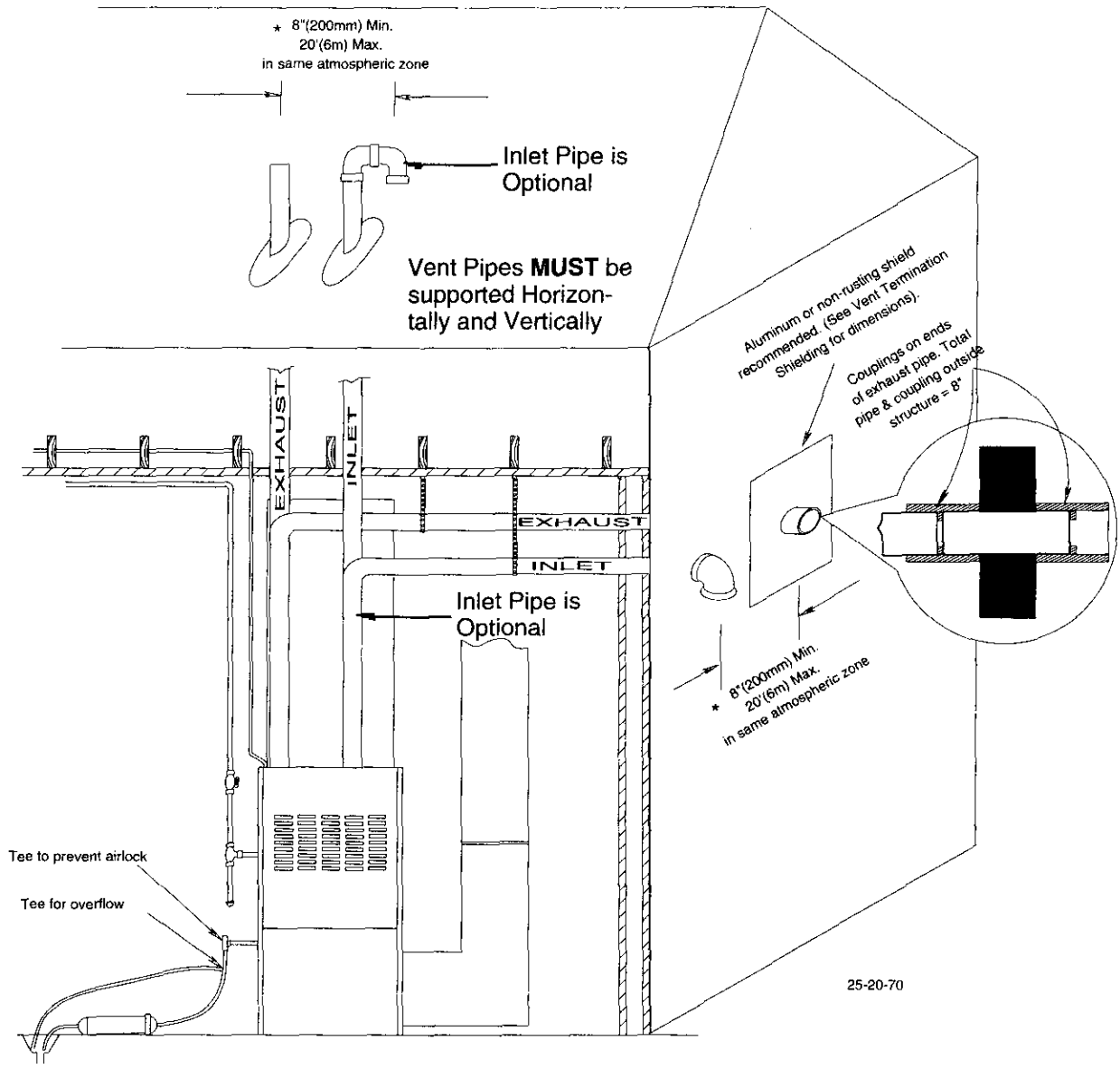

* Increase minimum from 8" to 18" for cold climates (substained temperatures below 0 °F).

Installation

Figure 2 Dimensions and Clearances

Cabinet Clearances						
TOP	BOT	RH	LH	BACK	FRNT	FLUE
1″	0″	0″	0″	0″	3″	0″

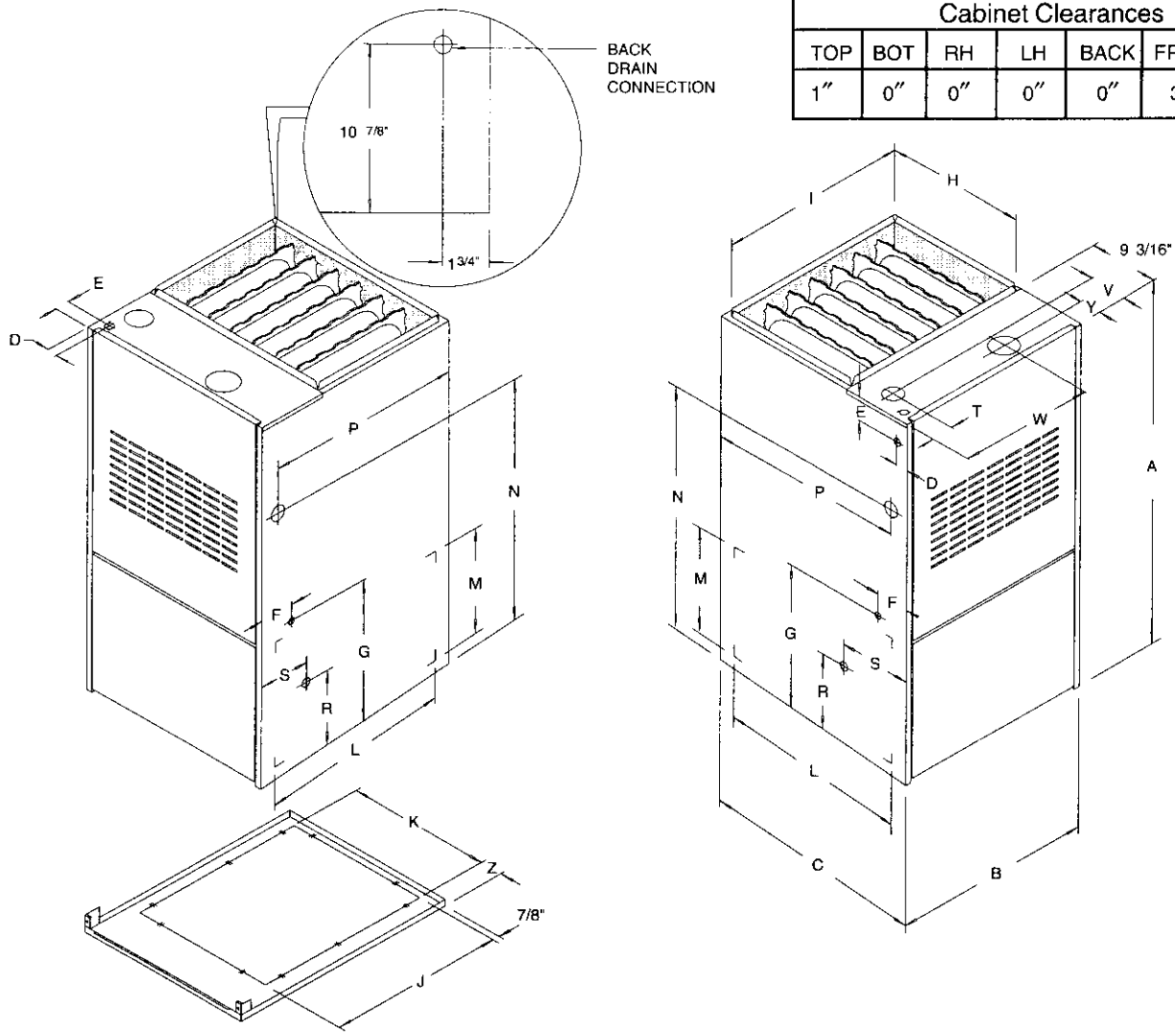

UNIT CAPACITY	CABINET			ELECTRICAL CONNECTIONS						SUPPLY AIR		RETURN AIR			
				TOP		LEFT SIDE		LOW VOLT				BOTTOM		SIDE	
	A	B	C	D	E	D	E	F	G	H	I	J	K	L	M
50,000	48"	19-1/8"	28-1/2"	1-1/2"	1-1/2"	1-5/8"	2-1/2"	4-1/2"	17-5/16"	18-1/2"	17-5/8"	23-1/8"	14-3/4"	22-1/2"	14-1/2"
75,000	48"	19-1/8"	28-1/2"	1-1/2"	1-1/2"	1-5/8"	2-1/2"	4-1/2"	17-5/16"	18-1/2"	17-5/8"	23-1/8"	14-3/4"	22-1/2"	14-1/2"
100,000	48"	22-3/4"	28-1/2"	1-1/2"	1-1/2"	1-5/8"	2-1/2"	4-1/2"	17-5/16"	18-1/2"	21-1/4"	23-1/8"	18-3/4"	22-1/2"	14-1/2"
125,000	48"	26-3/8"	28-1/2"	1-1/2"	1-1/2"	1-5/8"	2-1/2"	4-1/2"	17-5/16"	18-1/2"	24-7/8"	23-1/8"	23-1/2"	22-1/2"	14-1/2"

UNIT CAPACITY	GAS CONNECTIONS				DRAIN CONNECTION			FLUE OUTLET		AIR INLET		
	RIGHT SIDE		LEFT SIDE			RIGHT SIDE	LEFT SIDE					
	N	P	N	P	R	S	S	T	V	W	Y	Z
50,000	35-1/2"	23-7/8"	35-1/2"	26-1/16"	10-7/8"	4-1/2"	6-1/2"	2-11/16"	4-13/16"	12-7/8"	2-11/16"	2-1/8"
75,000	35-1/2"	23-7/8"	35-1/2"	26-1/16"	10-7/8"	4-1/2"	6-1/2"	2-11/16"	4-13/16"	12-7/8"	2-11/16"	2-1/8"
100,000	35-1/2"	23-7/8"	35-1/2"	26-1/16"	10-7/8"	4-1/2"	6-1/2"	2-11/16"	4-13/16"	14-11/16"	2-11/16"	2"
125,000	35-1/2"	23-7/8"	35-1/2"	26-1/16"	10-7/8"	4-1/2"	6-1/2"	2-11/16"	4-13/16"	18"	2-11/16"	1-7/16"

CONVERSION TO METRIC (mm)							
	48"=1219	28-1/2"=724	10-7/8"=276	17-5/16=440	23-1/8"=587	14-11/16"=373	1-3/8"=35
	35-1/2"=902	1-1/2"=38	4-1/2=114	7/8"=22	21-1/4"=540	12-7/8"=327	22-1/2"=572
	19-1/8"=486	26-1/16"=662	18-1/2"=470	6-1/2"=165	24-7/8"=632	18"=457	2-11/16=68
	22-3/4"=578		17-5/8"=448	9-3/16"=233	2-11/16"=68	12-5/8"=321	1-7/8"=48
	23-7/8"=606				4-13/16"=122	14-3/4"=375	2-1/8"=54
	26-3/8"=670					18-3/4"=476	14-1/2"=368

25-20-65

False Floor Closet Installation

NOTE: This type of installation is in a closet with the furnace placed over an opening in a false floor raised above the regular floor (**Figure 3**). False floor closet installation **MUST** be made in accordance with local building and fire codes.

1. If an existing closet is being reworked, shorten and frame the door so the door bottom is above, or flush with the location of false floor.
2. Construct a level framework of 2 x 4's or 2 x 6's around the inside of the closet. Make the top of the false floor at least 12 inches(300mm) above existing floor.
3. Cut a piece of plywood (for the false floor) to fit tightly inside the closet, but do **NOT** install yet.

NOTE: Plywood **MUST** be A-C exterior glued or approved for underlayment use, with a minimum 3/4 inch thickness. Maximum size is 4' x 4' unless supported by adequate bracing with any joints in the false floor tightly sealed.

4. Set the furnace on the plywood in proper position. Open front access panel and mark inside of bottom opening on plywood. Cut opening in the plywood.
5. Unless existing floor is concrete, place a piece of sheet metal on existing floor under position of opening in false floor. Sheet metal should be 2 inches wider in both directions than opening and centered under opening.
6. Apply silicone or butyl rubber caulking around top of frame work and install false floor. Seal around edge of false floor and any joints.
7. Apply a bead of caulking around opening in false floor and set furnace over opening so the bottom is sealed.
8. Cut return air openings and box them in so they are sealed from the wall and open **ONLY** into the area below the false floor and the return air opening in bottom of furnace.
9. Direct vent models do **NOT** require ventilation air.
10. Adequate combustion air openings **MUST** be provided if piping unit as non–direct vent (one pipe). See ***Combustion and Ventilation Air*** chapter.

Figure 3 Typical Closet False Floor Installation

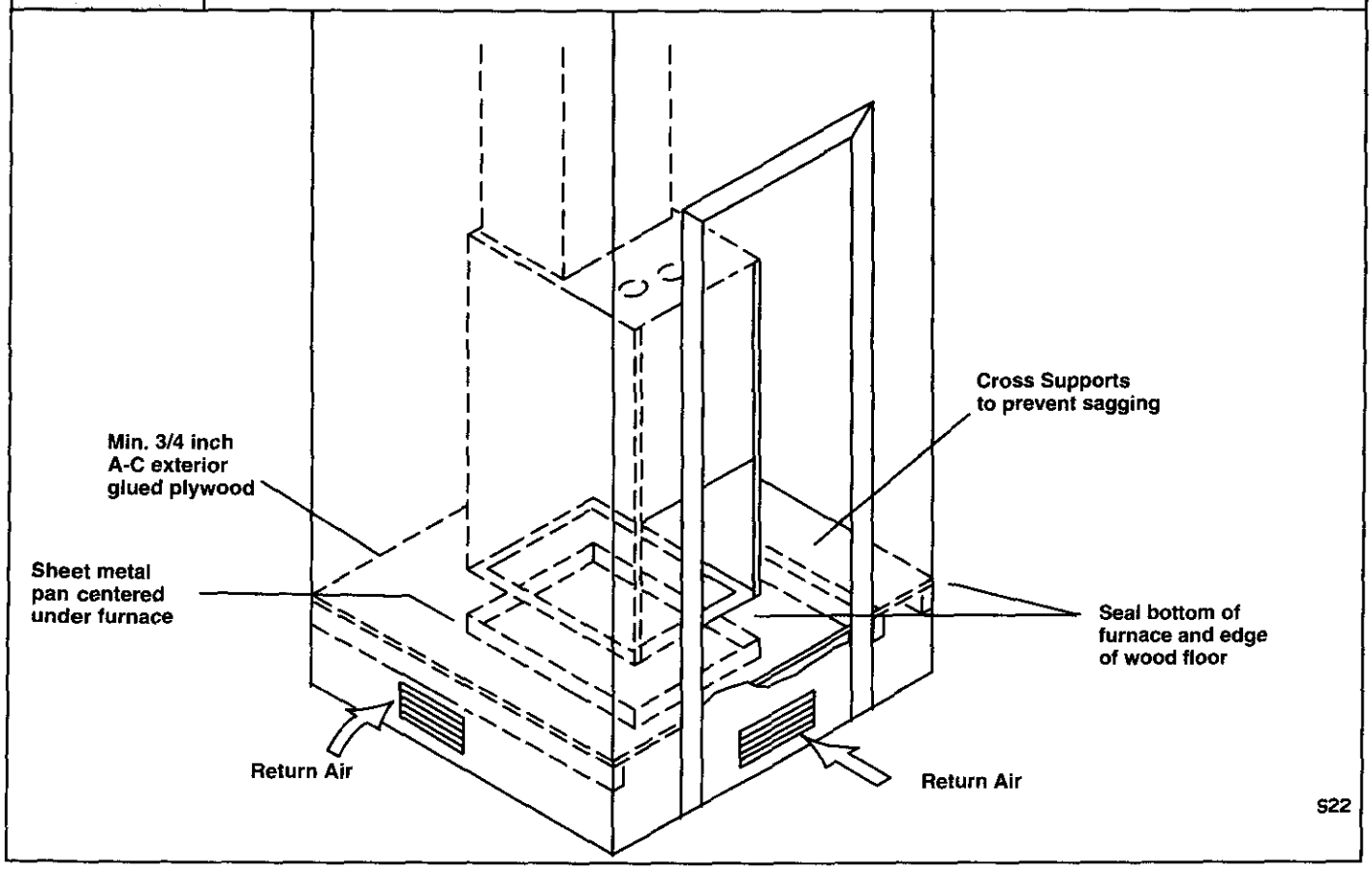

4. Combustion & Ventilation Air

WARNING

Carbon monoxide Poisoning Hazard.

Use methods described here to provide combustion and ventilation air.

Failure to provide adequate combustion and ventilation air can result in personal injury and/or death.

Venting and Combustion Air Check

NOTE: This section of the manual applies to this furnace **IF venting as a non–direct vent (single pipe) appliance.** The following information is supplied to allow the installer to make adjustments to the setup of existing appliances, **IF NEEDED**. These instructions are presented to be used for reference **ONLY IF NEEDED,** based on good trade practices, local codes, and good judgment of the installer. Manufacturer does **NOT** take responsibility for modifications made to existing equipment.

NOTE: If this installation removes an existing furnace from a venting system serving one or more other appliances, and to make sure there is adequate combustion air for all appliances, **MAKE THE FOLLOWING CHECK**.

1. Seal any unused openings in the venting system.
2. Visually inspect the venting system for proper size and horizontal pitch to ensure there is no blockage or restriction, leakage, corrosion or other deficiencies which could cause an unsafe condition.
3. Insofar as is practical, close all doors and windows and all doors between the space in which the appliance(s) remaining connected to the venting system are located and other spaces of the building.
4. Turn on clothes dryers and any appliance not connected to the venting system. Turn on any exhaust fans, such as range hoods and bathroom exhausts, so they will operate at maximum speed. Do not operate a summer exhaust fan. Close fireplace dampers.
5. Follow the lighting instructions for each appliance being inspected. Adjust thermostat so appliance(s) will operate continuously.
6. Allow 5 minutes of main burner operation, then check for spillage at the draft hood relief opening of each appliance. Use the flame of a match or candle (**Figure 4**).
7. After it has been determined that each appliance vents properly, return doors, windows, appliances etc. to their normal condition.
8. If improper venting is observed, the cause **MUST** be corrected using the appropriate tables in code books of country having jurisdiction. See Appendix for listing of applicable codes.

NOTE: If flame pulls towards draft hood, this indicates sufficient infiltration air.

Figure 4 Vent Check

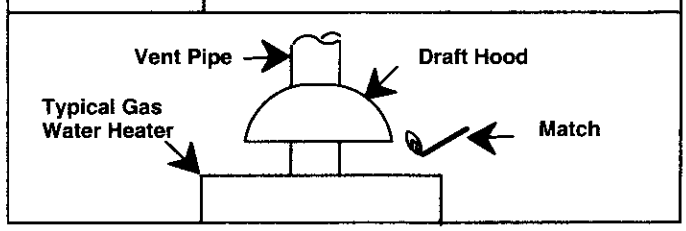

NOTE: Non–direct vent appliances occupying same enclosed space as furnace **MUST** have enough air for proper combustion and ventilation. All duct or openings for supplying combustion and ventilation air must comply with the gas and electrical codes of the country having jurisdiction. See *Appendix.*

When the installation is complete, check that all appliances have adequate combustion air and are venting properly. See *Venting And Combustion Air Check* in this manual.

Air Openings and Connecting Ducts

1. Total input rating for all non direct vent gas appliances, including furnace, **MUST** be considered when determining free area of openings.
2. Connect ducts or openings directly to outside.
3. When screens are used to cover openings, they **MUST** be no less than 1/4 inch(6mm) mesh.
4. The minimum dimension of rectangular air ducts **MUST NOT** be less than 3 inches(75mm).
5. When sizing grille or louver, use the free area of opening. If free area is **NOT** stamped or marked on grill or louver, assume a 20% free area for wood and 60% for metal.

Confined Space Installation

NOTE: A confined space is defined as an area with less than 50 cubic feet(1.4m^3) per 1,000 BTUH input rating for all gas appliances installed in the area.

Requirements

1. Provide confined space with sufficient air for proper combustion and ventilation of flue gases using horizontal or vertical ducts or openings.
2. **Figure 6, Figure 7,** and **Figure 8** illustrate how to provide combustion and ventilation air. A minimum of two permanent openings, one inlet and one outlet, are required.
3. One opening **MUST** be within 12 inches(300mm) of the floor and the second opening within 12 inches(300mm) of the ceiling.
4. Size openings and ducts per **Figure 5**.
5. Horizontal duct openings require 1 square inch(25sq. mm) of free area per 2,000 BTUH of com-

bined input for all gas appliances in area **(see Figure 5)**.

6. Vertical duct openings or openings directly to outside require 1 square inch(6.5mm³) of free area per 4,000 BTUH for combined input of all gas appliances in area **(see Figure 5)**.

Figure 5 — **Free Area (other appliances)**

BTUH Input Rating	Minimum Free Area Required for Each Opening		
	Horizontal Duct (2,000 BTUH)	Vertical Duct or openings to outside (4,000 BTUH)	Round Duct (4,000 BTUH)
50,000	25 sq. in.(161 cm²)	12.5 sq. in.(81 cm²)	4"
75,000	35.5 sq. in.(242 cm²)	18.75 sq. in.(121 cm²)	5"
100,000	50 sq. in.(323 cm²)	25 sq. in.(161 cm²)	6"
125,000	62.5 sq. in.(403 cm²)	31.25 sq. in.(202 cm²)	7"
150,000	71 sq. in.(484 cm²)	37.5 sq. in.(242 cm²)	7"

EXAMPLE: Determining Free Area

Appliance 1		Appliance 2		Total Input
100,000	+	30,000	=	(130,000 ÷ 4,000) = 210 cm² (32.5 Sq. In.) Vertical)

Appliance 1		Appliance 2		Total Input
100,000	+	30,000	=	(130,000 ÷ 2,000) = 419 cm² (65 Sq. In.) Horizontal)

Figure 7 — **Providing Combustion & Ventilation Air (Except Canada)**

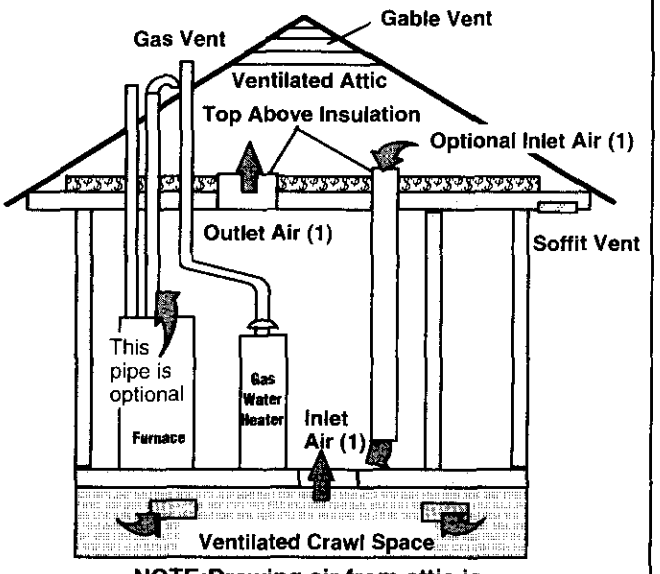

NOTE:Drawing air from attic is NOT allowed in Canada.

Minimum One Inlet and One Outlet Air Supply is Required
May be in any Combination Shown

Inlet Air Opening Must be Within 12" (300mm) of floor
Outlet Air Opening Must be Within 12" (300mm) of ceiling

(1) 1 Square inch(6cm2) per 4000 Btuh

Figure 6 — **Providing Combustion & Ventilation Air**

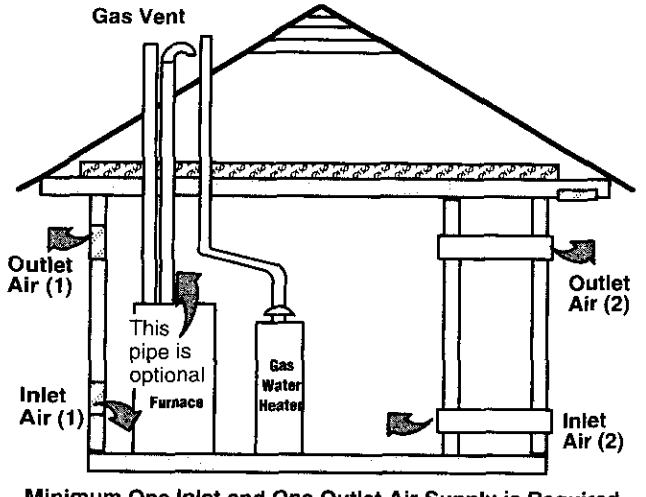

Minimum One Inlet and One Outlet Air Supply is Required
May be in any Combination Shown

Inlet Air Opening Must be Within 12" (300mm) of floor
Outlet Air Opening Must be Within 12" (300mm) of ceiling

(1) 1 Square inch(6cm2) per 4000 Btuh

(2) 1 Square inch(6cm2) per 2000 Btuh

Figure 8 — **Providing Combustion & Ventilation Air**

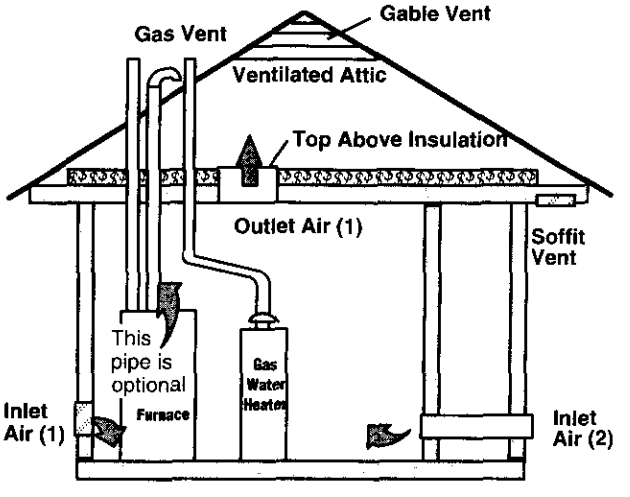

Minimum One Inlet and One Outlet Air Supply is Required
May be in any Combination Shown

Inlet Air Opening Must be Within 12" (300mm) of floor
Outlet Air Opening Must be Within 12" (300mm) of ceiling

(1) 1 Square inch(6cm2) per 4000 Btuh

(2) 1 Square inch(6cm2) per 2000 Btuh

Unconfined Space Installation

WARNING

Carbon Monoxide Poisoning Hazard.

Most homes will require additional air.

An unconfined space or homes with tight construction may not have adequate air infiltration for proper combustion and ventilation of flue gases.

Failure to supply additional air by means of ventilation grilles or ducts could result in personal injury and/or death.

An unconfined space is defined as an area having a minimum volume of 50 cubic feet(1.4m^3) per 1,000 Btuh total input rating for all gas appliances in area. Refer to **Figure 9** for minimum area required.

NOTE: Refer to definitions in section titled *Unusually Tight Construction* and the Appendix. If any *one* of the conditions apply, the space **MUST** be considered confined space regardless of size.

1. Adjoining rooms can be considered part of an unconfined area if there are openings without doors between rooms.
2. An attic or crawlspace may be considered an unconfined space provided there are adequate ventilation openings directly to outdoors. Openings **MUST** remain open and **NOT** have any means of being closed off. Ventilation openings to outdoors **MUST** be at least 1 square inch(25mm^2) of free area per 4,000 BTUH of total input rating for all gas appliances in area.

Figure 9 — **Unconfined Space Minimum Area in Square Feet**

BTUH Input Rating	Minimum Area in Square Feet	Round Duct Size 1 Sq. Inch per 4,000 BTUH
50,000	312(29m^2)	4"(100mm)
78,000	490(46m^2)	5"(127mm)
114,000	712(66m^2)	6"(152mm)
155,000	968(90m^2)	7"(178mm)

EXAMPLE: NOTE: Square feet is based on 8 foot ceilings.

$$\frac{28{,}000\ \text{BTUH}}{1{,}000} \times 50\ \text{Cubic Ft.} = \frac{1{,}400}{8'\ \text{Ceiling Height}} = 175\ \text{Sq. Ft.}$$

3. Install air intake a minimum of 12" (300mm) above maximum snow level and clear of any obstruction. Duct or ventilation opening requires one square inch of free area per 4,000 BTUH of total input rating for all gas appliances in area. Refer to **Figure 10** for typical fresh air duct installation.
4. Air inlet **MUST** be screened with not less than 1/4 inch(6mm) mesh screen.

Unusually Tight Construction

In unconfined spaces, infiltration may be adequate to provide air for combustion, ventilation and dilution of flue gases. However, in buildings with unusually tight construction, additional air **MUST** be provided using the methods described in section titled *Confined Space Installation*:

If **any *one*** of the following conditions are present, the space **MUST** be treated as confined space.

1. Walls and ceilings exposed to the outside have a continuous, sealed vapour barrier. Openings are gasketed or sealed.
2. Doors and openable windows are weather stripped.
3. Other openings are caulked or sealed. These include joints around window and door frames, between sole plates and floors, between wall–ceiling joints, between wall panels, at penetrations for plumbing, electrical and gas lines, etc.

Figure 10 — **Fresh Air Duct**

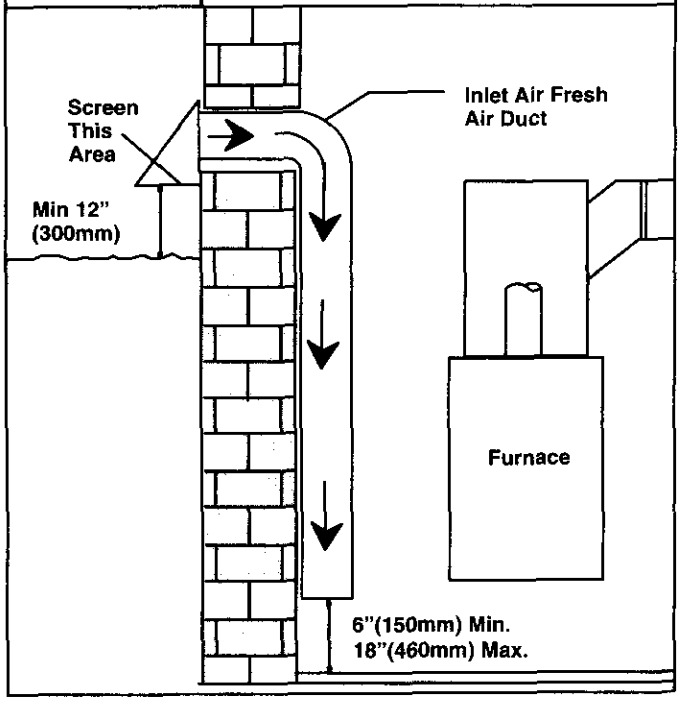

Ventilation Air

Some provincial codes and local municipalities require ventilation or make–up air be brought into the conditioned space as replacement air.Whichever method is used, the mixed return air temperature across the heat exchanger **MUST** not fall below 60°F (15° c) or flue gases will condense in the heat exchanger. This will shorten the life of the heat exchanger and possibly void your warranty.

5. Vent and Combustion Air Piping

WARNING

Carbon monoxide poisoning, fire and explosion hazard.

Read and follow all instructions in this section

Failure to properly vent this furnace can result in property damage, personal injury and/or death.

Dual Certified Furnace

This furnace is certified as a category IV appliance and is dual certified as a direct vent furnace using outside air for combustion or it can use air from inside the structure for combustion. The **INLET** air pipe is optional. If combustion air comes from inside the structure, adequate make up air **MUST** be provided to compensate for oxygen burned. See ***Confined Space Installation*** in the ***Combustion and Ventilation Air*** chapter. If combustion air is drawn from outside the structure, it **MUST** be taken from the same atmospheric pressure zone as the vent pipe.

Contaminated Combustion Air

Installations in certain areas or types of structures will increase the exposure to chemicals or Halogens which may harm the furnace.

The following areas or types of structures may contain chemicals or Halogens. Inspect structure carefully to ensure listed chemicals or substances are **NOT** present.

- Commercial buildings.
- Buildings with indoor pools.
- Furnaces installed in laundry rooms.
- Furnaces installed in hobby or craft rooms.
- Furnaces installed near chemical storage areas.

Exposing the furnace to the following substances will damage the furnace. Do **NOT** situate air inlet near any of the following chemicals or their source.

CAUTION

Terminate the combustion air intake as far as possible from any air conditioner, heat pump, swimming pool, swimming pool pumping, chorlinator or filtration units, or dryer vent.

- Permanent wave solutions for hair.
- Chlorinated waxes and cleaners.
- Chlorine based swimming pool chemicals.
- Water softening chemicals.
- De–icing salts or chemicals.
- Carbon tetrachloride.
- Halogen type refrigerants.
- Cleaning solvents (such as perchloroethylene).
- Printing inks, paint removers, varnishes, etc..
- Hydrochloric acid.
- Sulfuric Acid.
- Solvent cements and glues.
- Antistatic fabric softeners for clothes dryers.
- Masonry acid washing materials.

Vent and Combustion Air Piping Guidelines

NOTE: All vent piping **MUS**T be installed in compliance with local codes or ordinances, these instructions, good trade practices, and codes of country having jurisdiction.

1. Determine the best routing and termination for the vent pipe and air inlet pipe (when used) by referring to all of the instructions and guidelines in **Section 6**.
2. Determine the size required for the vent pipe and air inlet pipe (when used).
3. Loosely assemble all venting parts without adhesive (pipe joint cement) for correct fit before final assembly.
4. Use of vertical piping is preferred because there will be some moisture in the flue gases that may condense as it leaves the vent pipe (See *Special Instruction For Horizontal Vents*).
5. The vent **MUST** exit the furnace at the top left side.
6. The vertical vent pipe **MUST** be supported so that no weight is allowed to rest on the combustion blower.
7. Exhaust vent piping diameter **MUST NOT** be reduced.
8. All piping from the furnace to termination **MUST** slope upwards, away from furnace, a minimum of 1/4" per foot of run (6mm per 300mm).
9. Use DWV type long radius elbows whenever possible, as they provide for the minimum slope on horizontal runs and they provide less resistance in the vent system. If DWV elbows cannot be used, use two, 45 degree elbows when possible. On horizontal runs the elbows can be slightly misaligned to provide the correct slope.
10. All horizontal pipe runs **MUST** be supported at least every five feet with metal pipe strapping. **NO** sags or dips are permitted.
11. All vertical pipe runs **MUST** be supported every six feet where accessible.
12. The maximum pipe length is 40 total feet (12m) in the inlet ***or*** outlet side of the system. Up to five, 90 degree elbows can be used on the inlet ***or*** the outlet, **(See Vent Tables).**
13. The minimum pipe run length is 5 feet (1.5m).
14. Venting through a crawl space is permitted only as directed by your distributor or factory representative.

15. The piping can be run in the same chase or adjacent to supply or vent pipe for water supply or waste plumbing. It can also be run in the same chase with a vent from another 90+ furnace.

    NOTE: In **NO** case can the piping be run in a chase where temperatures can exceed 140° F. or where radiated heat from adjacent surfaces would exceed 140° F.

16. If installing as a direct–vent appliance, the vent outlet **MUST** be installed to terminate in the same atmospheric pressure zone as the combustion air inlet.
17. The vent system can be installed in an existing unused chimney provided that:

- Both the exhaust vent and air intake run the length of the chimney.
- No other gas fired appliance or fireplace is vented into the chimney.
- The top of the chimney **MUST** be sealed flush or crowned up to seal against rain or melting snow so **ONLY** the piping protrudes.
- The termination clearances shown in **Figure 16** are maintained.

Piping Insulation Guidelines

NOTE: In general, chimneys on an outside wall and attics are exposed to cold conditions which can cause the vent pipe to sweat from condensation. This can lead to moisture damage to living spaces. It is highly recommended that piping in these cases be insulated to insure proper protection from condensation damage.

Use 1/2" (50mm) wall, closed cell, neoprene insulation or equivalent. If Fiberglas or equivalent insulation is used it must have a vapor barrier. Use R values of 7 up to 10 feet, R–11 if exposure exceeds 10 feet. If Fiberglas insulation is used, exterior to the structure, the pipe **MUST** be boxed in and sealed against moisture.

1. Insulate pipe when the exhaust vent passes through an unconditioned space or raceway.
2. If situations require pipe to be run on the exterior wall to reach a suitable termination point, it **MUST** be properly insulated.
3. If it is necessary to insulate piping when an inactive chimney is used as a chase, the top of the chimney **MUST** be sealed flush or crowned up to seal against rain or melting snow so **ONLY** the piping protrudes.
4. When the vent or combustion air pipe height above the roof exceeds 30 inches(760mm), or if an exterior vertical riser is used on a horizontal vent to get above snow levels, the exterior portion **MUST** be insulated.
5. When combustion air inlet piping is installed above a suspended ceiling, the pipe **MUST** be insulated with moisture resistant insulation such as Armaflex or other equivalent type of insulation.
6. Insulate combustion air inlet piping when run in warm, humid spaces such as basements.

Sizing Combustion Air and Vent Pipe

1. **Single Pipe Installation**–If installing as a non–direct vent appliance, (single outlet pipe and no inlet pipe) refer to **Table 1.** The table shows the maximum number of elbows allowed with any given pipe diameter and length of run.
2. **Double Pipe Installation**–If installing as a direct–vent appliance, consult **Table 2** to select the proper diameter exhaust and combustion air piping. Exhaust and combustion air piping is sized for each furnace Btuh size based on total lineal vent length (on inlet ***or*** outlet side), and number of 90° elbows required.
3. **Use of Elbows**–Two 45° elbows can be substituted for one 90° elbow. The elbow or elbows used for vent termination outside the structure **ARE** counted, including elbows needed to bring termination above expected snow levels. **When the vent system length used is borderline with the next size combination category, always use the next larger size.**

EXAMPLE: Refer to, 75,000 Btuh Furnace, Table 2.

- A vent system uses 25 feet of Inlet pipe and 24 feet of Outlet pipe. Use the maximum length found in your system, so 25 ft. is the length to use in these tables. The 25–30 column should be used .

- There are 4 elbows on the Outlet and 2 elbows on the Inlet. Use the 4 elbows row because that is the maximum number of elbows on any ***one*** side (Inlet or Exhaust).

- In this example, combinations **C** or **F** are allowed. Using the legend at the bottom of the table, combination **C** is 3″ Inlet with a 2½″ Exhaust. Combination **F** is a 3″ Inlet with a 3″ Exhaust. Either combination is allowed together, but they can **NOT** be mixed. In other words, part of a **C** combination can **NOT** be used with part of an **F** combination just because they are listed together in the same block.

Table 1	Pipe Diameter Table Single Piping ONLY						
50,000 & 75,000 Btuh Furnaces							
Max No. Of Elbows in One Side ℑ	Feet of Pipe*						
	0–9	10–14	15–19	20–24	25–29	30–34	35–40
UP TO 5	All combinations use "A" a 2″ Exhaust						
100,000 Btuh Furnace							
Max No. Of Elbows in One Side ℑ	Feet of Pipe*						
	0–9	10–14	15–19	20–24	25–29	30–34	35–40
1	A	A	A	A	A	A	B,C
2	A	A	A	A	A	B,C	B,C
3	A	A	A	A	B,C	B,C	B,C
4	A	A	A	B,C	B,C	B,C	B,C
5	A	A	B,C	B,C	B,C	B,C	B,C
125,000 Btuh Furnace							
Max No. Of Elbows in One Side ℑ	Feet of Pipe*						
	0–9	10–14	15–19	20–24	25–29	30–34	35–40
1	A	A	B,C	B,C	B,C	B,C	C
2	A	B,C	B,C	B,C	B,C	C	C
3	B,C	B,C	B,C	B,C	C	C	C
4	B,C	B,C	B,C	C	C	C	C
5	B,C	B,C	C	C	C	C	C

Possible combination legend:
A = 2″ Exhaust
B = 2½″ Exhaust
C = 3″ Exhaust

Elbows are DWV Long Radius Type for 2″ and 3″ vents. Schedule 40 (sharp radius) for 2½″

ℑ – *Signifies the maximum number of elbows, including the termination elbow(s), on any one part of the system. Example: 4 elbows on the exhaust and 5 elbows on the inlet would use the chart showing 5 elbows, because 5 is the maximum number on any one side.*

* Feet of pipe is whichever pipe run is the longest, either inlet *or* outlet side.

Table 2	Pipe Diameter Table Dual Piping ONLY						
50,000 Btuh Furnace							
Max No. Of Elbows in One Side ℑ	Feet of Pipe*						
	0–9	10–14	15–19	20–24	25–29	30–34	35–40
UP TO 5	All combinations use "A" a 2″ Exhaust and 2" Air Inlet Pipe						
75,000 Btuh Furnace							
Max No. Of Elbows in One Side ℑ	Feet of Pipe*						
	0–9	10–14	15–19	20–24	25–29	30–34	35–40
1	A	A	A	A	D,B	E,B	E,B
2	A	A	A	D,B	E,B	E,B	C,F
3	A	A	D,B	E,B	E,B	C,F	C,F
4	A	D,B	E,B	E,B	C,F	C,F	C,F
5	D,B	E,B	E,B	C,F	C,F	C,F	C,F
100,000 Btuh Furnace							
Max No. Of Elbows in One Side ℑ	Feet of Pipe*						
	0–9	10–14	15–19	20–24	25–29	30–34	35–40
1	A	A	A	D,B	E,B	E,B	C,F
2	A	A	D,B	E,B	E,F	C,F	C,F
3	A	D,B	E,B	E,F	C,F	C,F	C,F
4	D,B	E,B	E,F	C,F	C,F	C,F	C,F
5	E,B	E,F	C,F	C,F	C,F	C,F	C,F
125,000 Btuh Furnace							
Max No. Of Elbows in One Side ℑ	Feet of Pipe*						
	0–9	10–14	15–19	20–24	25–29	30–34	35–40
UP TO 5	All combinations use "F" a 3″ Exhaust and 3" Air Inlet Pipe						

Possible combination legend:
A = 2″ Inlet with a 2″ Exhaust
B = 3″ Inlet with a 2″ Exhaust
C = 3″ Inlet with a 2½″ Exhaust
D = 2½″ Inlet with a 2″ Exhaust
E = 2½″ Inlet with a 2½″ Exhaust
F = 3″ Inlet with a 3″ Exhaust

Elbows are DWV Long Radius Type for 2″ and 3″ vents. Schedule 40 (sharp radius) for 2½″

Vent Termination Clearances

WARNING

Carbon monoxide poisoning, fire and explosion hazard.

Inlet and outlet pipes may NOT be vented directly above each other.

Failure to properly vent this furnace can result in property damage, personal injury and/or death.

1. Determine termination locations based on clearances specified in following steps and as shown in **Figure 11, Figure 14, Figure 15 and Figure 16.**
2. The vent termination must be located at least 12 inches(300mm) above ground or normally expected snow accumulation levels.
3. Do **NOT** terminate over public walkways. Avoid areas where condensate may cause problems such as above planters, patios, or adjacent to windows where steam may cause fogging.
4. The vent termination shall be located at least 4 feet(1220mm) horizontally from any electric meter, gas meter, regulator, and any relief equipment. These distances apply **ONLY** to U.S. installations.
5. The vent termination is to be located at least 3 feet(914mm) above any forced air inlet located within 10 feet(3m) ; and at least 10 feet(3m) from a combustion air intake of another appliance, except another direct vent furnace intake.
6. In Canada, the *Canadian Fuel Gas Code* takes precedence over the preceding termination instructions. See *Appendix* .

Figure 11 | **Vent Termination Clearances (United States Only)**

See text for Canadian Requirements

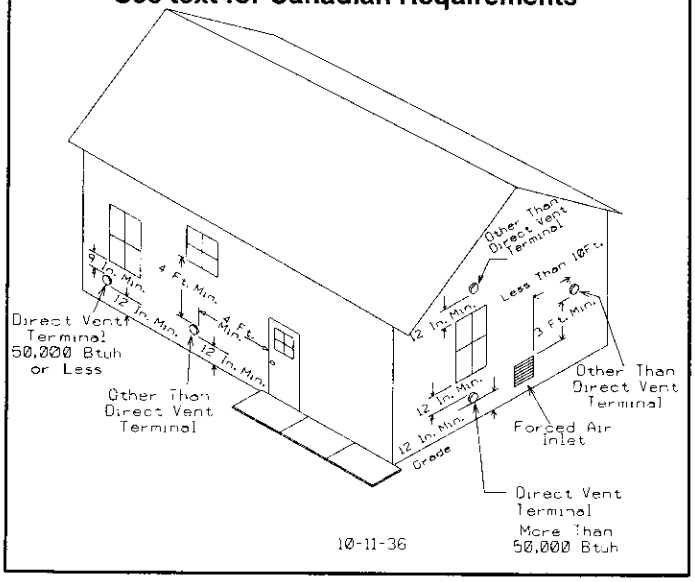

Condensate Drain Trap and Neutralizer

This furnace removes both sensible and latent heat from the combustion flue gases. Removal of latent heat results in condensation of flue gas water vapor. This condensed water vapor drains from the secondary heat exchanger, through a built–in drain trap transition, and out of the unit. Condensate piping or tubing can exit from the right side, left side, or rear of the cabinet.

NOTE: The 90° compression fitting elbow(provided), requires the drain line and overflow line are to be $^1/_2$ inch(13mm) copper tube. CPVC. $^5/_8$" (16mm) I.D. vinyl tubing may be used outside the furnace cabinet to connect to the drain line. Internal trap assembly provides the required 4 inches water column, so no additional trap is required.

1. Do **NOT** put a loop in the drain piping. This would cause an extra water column pressure in addition to the pressure inside the built–in drain trap.
2. Drains must terminate at an inside drain to prevent freezing of condensate and possible property damage.
3. Consideration **MUST** be given to type of filter being installed. 125,000 Btuh furnace require 2–16x25x1 filters(one on each side of furnace). This configuration does **NOT** allow the condensate drain line to be run out the side of furnace. If line **MUST** be run out the side, an optional standoff filter rack with one 20x25x1 filter is needed. Install optional filter rack on side of furnace opposite the side where condensate drain line will exit.
4. A condensate or sump pump **MUST** be used if local codes require, or if no inside floor drain is available. If pump is approved for use with acidic condensate, a neutralizer cartridge is not needed. If using a neutralizer cartridge, it **MUST** be installed in the drain line in a horizontal position **ONLY.**

NOTE: Recommended service time for replacing neutralizer cartridge is one year.

5. A condensate pump **MUST** have an auxiliary safety switch to prevent operation of furnace and resulting overlow of condensate in the event of pump failure. The safety switch **MUST** be wired through the R circuit **ONLY** (low voltage) to provide operation in either heating or cooling modes.
6. Install an overflow line if routing to floor drain or sump pump. See **Figure 1** for example of proper routing and installation of overflow line.

Connecting Furnace and Piping

WARNING

Carbon monoxide poisoning hazard.

Cement or mechanically seal all joints, fittings, etc. to prevent leakage of flue gases.

Failure to properly seal vent piping can result in personal injury and/or death.

1. Preassemble the exhaust and combustion air piping from the furnace to the vent termination. Do **NOT** ce-

ment any joints together until the preassembly process is complete.

Vent Pipe Connection

1. Install the ABS supplied piece of vent pipe to the combustion blower using RTV sealant **ONLY.** This provides for future serviceability.

CAUTION

Do NOT cement pipe into combustion blower. When inserting vent pipe into combustion blower, use a bead of RTV sealant that is at least 3/8" (10mm) from the edge of the pipe. Too much sealant can cause the condensate drain to clog. See Figure 12.

2. Install the flexible connector (provided) on the ABS pipe from the combustion blower. This will be used to connect to the rest of the vent system. See **Figure 13.**

Air Inlet Pipe Connection

NOTE: Air Inlet Collar is sized for 3" PVC pipe. If 2" (50mm) or 2 1/2" (64mm) combustion air piping is used, a 3" (75mm) to 2" (50mm) or 3" (75mm) to 2 1/2" (64mm) reducer fitting is required.The reducing section can be before the 90° elbow in a horizontal section.

1. Install pipe section or pipe/reducer fitting (as required) to the inlet collar using RTV sealant **ONLY** to provide for future serviceability.

NOTE: On single pipe installation, using combustion air from inside the structure, it is recommended that a screen be placed inside the Combustion Air Inlet. A 3" plastic screen is available for this purpose. It will prevent small objects from falling into the combustion chamber. Use RTV sealant **ONLY** to provide for future serviceability.

Figure 12 — **Proper Sealing Procedure for Combustion Blower**

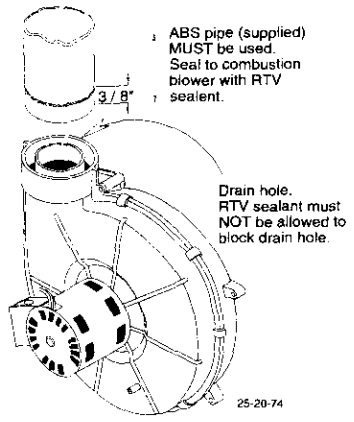

Figure 13 — **Vent Trap and Furnace Connections**

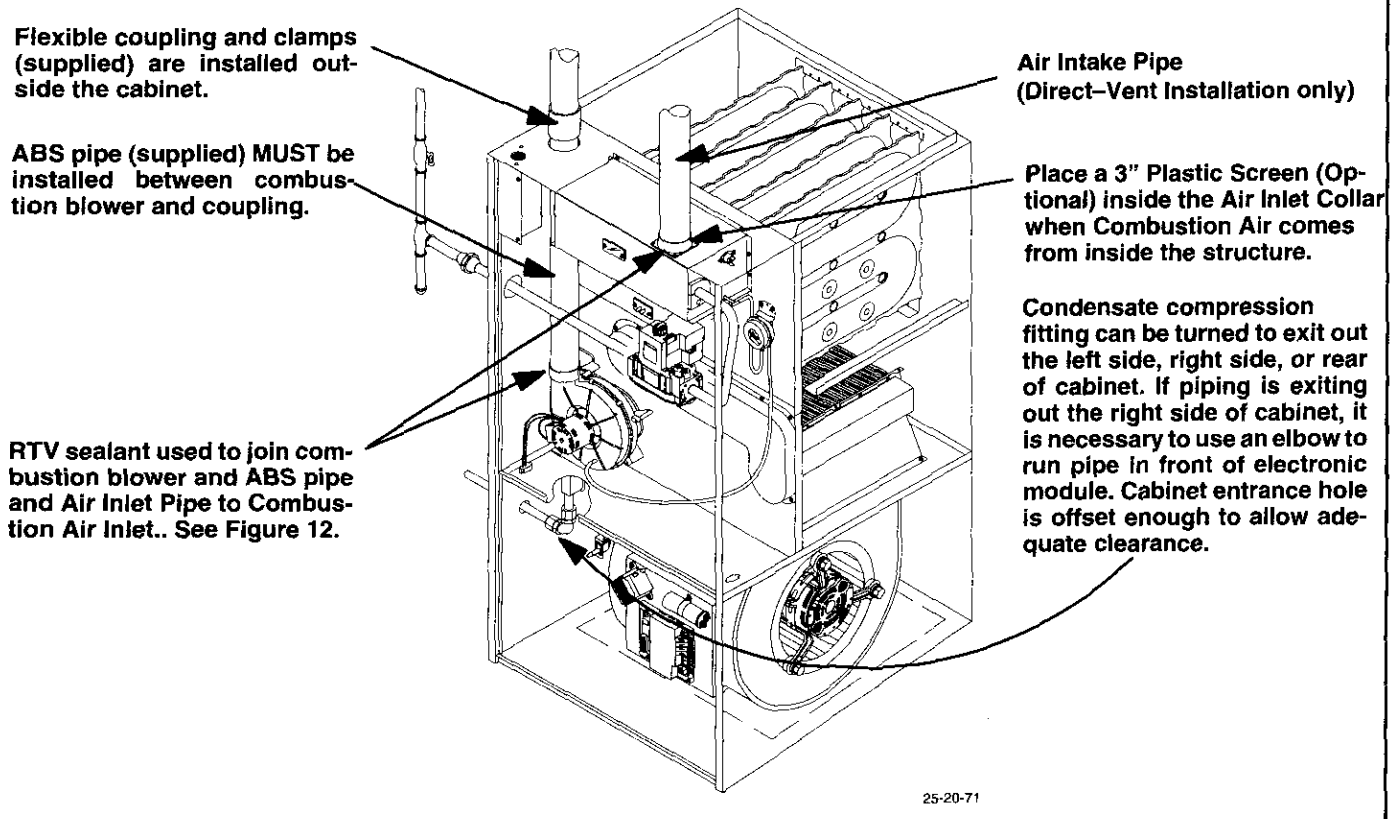

Joining Pipe and Fittings

WARNING

Fire hazard.

Provide adequate ventilation and do NOT assemble near heat source or open flame. Do NOT smoke while using solvent cements and avoid contact with skin or eyes.

Observe all cautions and warnings printed on material containers to prevent possible personal injury and/or death.

Venting

NOTE: All PVC, CPVC, ABS, and Cellular Core pipe fittings, solvent cement, primers and procedures **MUST** conform to American National Standard Institute and American Society for Testing and Materials (ANSI/ASTM) standards. Schedule 40 is the **ONLY** approved wall thickness.

- *Pipe and Fittings* – ASTM D1785, D2466, D2661, D2665, F–891
- *PVC Primer and Solvent Cement* – ASTM D2564
- *Procedure for Cementing Joints* – Ref ASTM D2855

NOTE: In order to create a seal that allows future removal of pipe, RTV sealant **MUST** be used on both the inlet and the exhaust pipes where they join to the furnace. PVC, CPVC, ABS, and Cellular Core pipe and cement may be used on all other joints.

CAUTION

Do NOT use solvent cement that has become curdled, lumpy or thickened and do NOT thin. Observe precautions printed on containers. For applications below 32 degrees F., use only low temperature type solvent cement.

1. Cut pipe end square, remove ragged edges and burrs. Chamfer end of pipe, then clean fitting, socket and pipe joint of all dirt, grease, or moisture.

NOTE: Stir the solvent cement frequently while using. Use a natural bristle brush or the dauber supplied with the cement. The proper brush size is one inch.

2. After checking pipe and socket for proper fit, wipe socket and pipe with cleaner-primer. Apply a liberal coat of primer to inside surface of socket and outside of pipe. Do **NOT** allow primer to dry before applying cement.
3. Apply a thin coat of cement evenly in the socket. Quickly apply a heavy coat of cement to the pipe end and insert pipe into fittings with a slight twisting movement until it bottoms out.

NOTE: Cement **MUST** be fluid while inserting pipe. If **NOT,** recoat pipe.

4. Hold the pipe in the fitting for 30 seconds to prevent the tapered socket from pushing the pipe out of the fitting.
5. Wipe all excess cement from the joint with a rag. Allow 15 minutes before handling. Cure time varies according to fit, temperature and humidity.

Connecting Vent Pipes and Termination

NOTE: Combustion air intake and vent **MUST** terminate in the same atmospheric pressure zone. If installation is in a cold climate (substained temperatures below 0°F), increase the minimum distance between vent pipe and air intake from 8" to 18".

CAUTION

Maintain a minimum of 36 inches(1m) between combustion air inlet and clothes dryer vent. Terminate the combustion air intake as far as possible from any air conditioner, heat pump, swimming pool, swimming pool pumping, chorlinator or filtration unit.

WARNING

Carbon monoxide poisoning, fire and explosion hazard.

Inlet and outlet pipes may NOT be vented directly above each other.

Failure to properly vent this furnace can result in property damage, personal injury and/or death.

1. Install all couplings, nipples and elbows using proper procedures for **Joining Pipe and Fittings** and maintain spacing between vent and combustion air piping as indicated in **Figure 14** through **Figure 16**.

Vertical Termination

1. **Figure 16** shows the proper installation and clearances for vertical vent termination. The vertical roof termination should be sealed with a plumbing roof boot or equivalent flashing. The inlet of the intake pipe and end of the exhaust vent must be terminated no less than 12"(300mm) above the roof or snow accumulation level, and 12"(300mm) away from a vertical wall or other protrusion.
2. If the vent system is installed in an existing chimney make sure clearances shown in **Figure 16** are maintained. Horizontal section before the termination elbow can be extended on the inlet air to provide necessary clearance.

Horizontal Termination

1. If installing as a direct–vent appliance, cut two holes. 2 1/2" (67mm) for 2" (50mm) pipe, 3"(75mm) for 2 1/2" (67mm) pipe, or 3 1/2" (90mm) for 3"(75mm) pipe. Do **NOT** make the holes oversized, or it will be necessary to add a sheet metal or plywood plate on the outside with the correct size hole in it. If venting as a single pipe appliance, cut only one hole.

2. Check hole sizes by making sure it is smaller than the couplings or elbows that will be installed on the outside. The couplings or elbows **MUST** prevent the pipe from being pushed back through the wall.
3. Extend vent pipe and combustion air pipe through the wall 3/4 to 1"(19 to 25mm) and seal area between pipe and wall.
4. Install the couplings, nipple and termination elbows as shown and maintain spacing between vent and combustion air piping as indicated in **Figure 14** through **Figure 16**.

Using Exterior Risers

1. Install elbows and pipe to form riser as shown in **Figure 15**.
2. Secure vent pipe to wall with galvanized strap or other rust resistant material to restrain pipe from moving.
3. Insulate pipe with Armaflex or equivalent moisture resistant closed cell foam insulation or Fiberglass insulation if boxed in and sealed against moisture.

Optional Vent Screens

To prevent unwanted pests or foreign material from entering terminated pipes, plastic vent screens are available in 2" and 3" sizes. Use of these screens is recommended except in cold climate areas where ice is likely to form on them. Glue the screen inside the termination elbow using pipe cement. Screens should be inspected monthly for blockage and cleaned yearly prior to startup.

Figure 14 — **Sidewall Termination 12 Inches or More Above Snow Level or Grade Level**

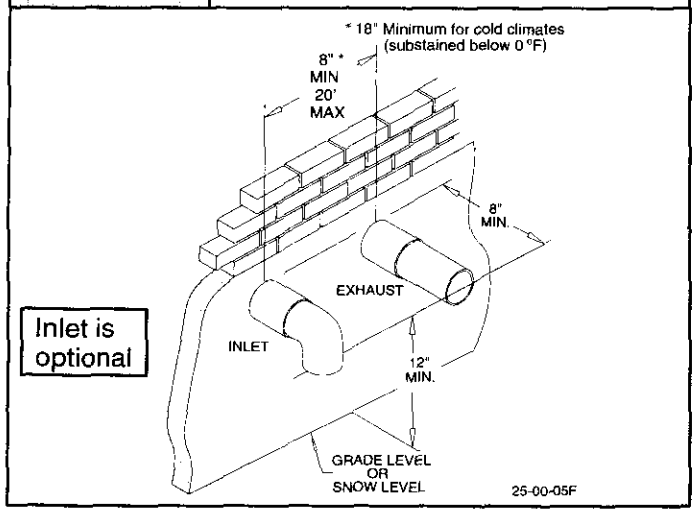

Vent Termination Shielding

Under certain wind conditions some building materials may be affected by flue products expelled in close proximity to unprotected surfaces. Sealing or shielding of the exposed surfaces with a corrosion resistant material (such as aluminum sheeting) may be required to prevent staining or deterioration. The protective material should be attached and sealed (if necessary) to the building before attaching the vent terminal.

A metal shield is recommended 18" x 18"(457mm x 457mm) min. or 18"(457mm) min. diameter around the vent termination at the exterior wall to protect the house exterior materials from flue product or condensation (freezing) damage.

Figure 15 — **Sidewall Termination with Exterior Risers to Get Above Snow Level or Grade Level**

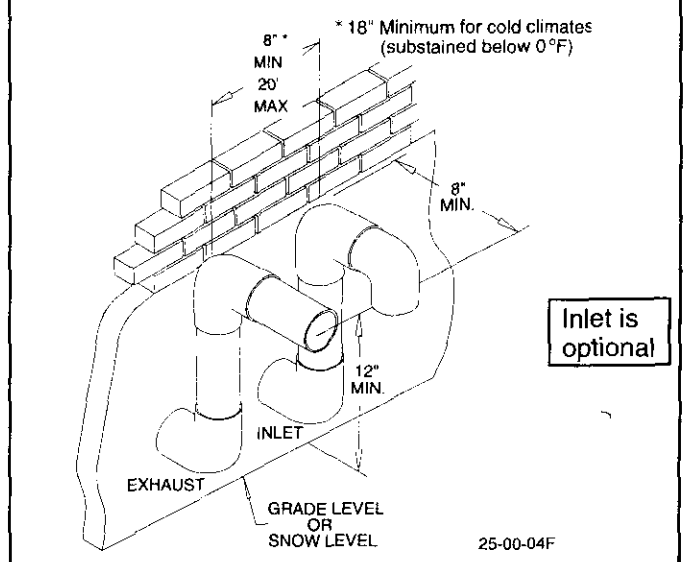

Figure 16 — **Rooftop Termination**

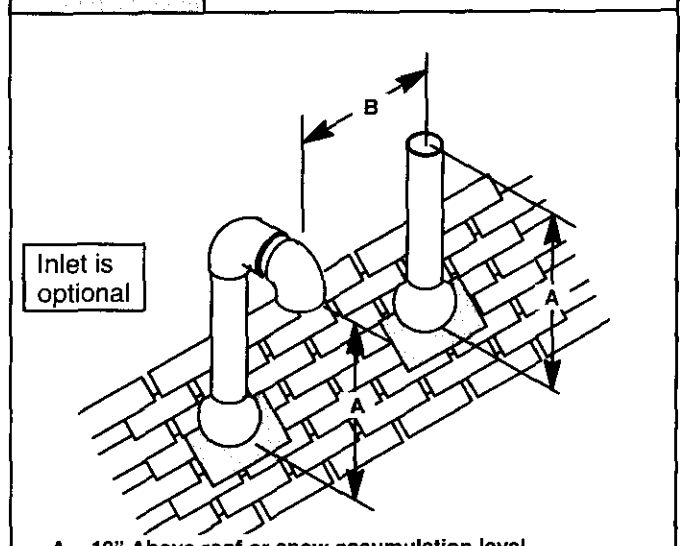

A = 12" Above roof or snow accumulation level
B = 8" Min., 20' Maximum, except in areas with extreme cold temperatures (substained below 0 °F), then 18" Min.
25–00–06

6. Gas Supply and Piping

WARNING

Fire and explosion hazard.

Natural Gas

Models designated for Natural Gas are to be used with Natural Gas ONLY.

LP Gas

LP gas models have orifices sized for commercially pure propane gas. Furnace MUST NOT be used with butane or a mixture of butane unless properly sized orifices are installed by a licensed LP installer.

Failure to follow these instructions can result in property damage, personal injury and/or death.

Piping

NOTE: The rating plate is stamped with the model number, gas type and gas input rating. In addition, models manufactured for sale in Canada have orifice size information stamped on the rating plate.

Supply Pressure

WARNING

Fire hazard.

Do NOT set input rating above that shown on rating plate.

Failure to properly set input pressure can result in property damage, personal injury and/or death.

1. Supply pressure can be checked using the 1/8"(3.2mm) NPT port on the supply side of the gas valve.

2. Gas input to burners **MUST NOT** exceed the rated input shown on rating plate.

3. Do **NOT** allow minimum gas supply pressure to vary downward. Doing so will decrease input to furnace. Refer to **Figure 17** for normal gas supply and manifold pressures.

General U.S. Derating Rules

1. For operation with natural gas at altitudes 2,000 feet and above, orifice change and/or manifold pressure adjustment may be required to suit gas supplied. Check with gas supplier. If orifice sizing is needed, it should be based on reducing the input rating by 4 percent for each 1,000 feet above sea level. See **Figure 18** and **Figure 19** for required pressure change and/or orifice change for high altitudes.

2. For operation with LP gas, gas orifices **MUST** be changed and manifold pressure **MUST** be *maintained* as per **Figure 17.** Orifice sizes for 0–2000 ft. above sea level are #54. 2000–7000 ft. above sea level, use #55. 7000–8000 ft. above sea level, use #56 orifices. Orifices can be ordered through your distributor.

General Canadian Derating Rules

3. In Canada, to derate both Natural and LP gas, the input **MUST** be decreased 10% for altitudes 2,000–4,500 ft. above sea level. The orifice **MUST** be sized as shown on the rating plate, **NOT** as shown in these instructions. Installations above 4,500 ft. **MUST** consult provincial authorities.

Figure 17 | **Gas Pressures Below 2000 Ft.**

Gas Type	Supply Pressure			Manifold Pressure
	Recommended	Max.	Min.	
Natural	7 inches	14 inches	4.5 inches	3.5 inches
LP	11 inches	14 inches	11 inches	10 inches

Important Notes

- **With Propane gas, the rated input is obtained when the BTU content is 2,500 BTU per cubic foot and manifold pressure set at 10 inches W.C.**
- **If Propane gas has a different BTU content, orifices MUST be changed by licensed Propane installer.**
- **Measured input can NOT exceed rated input.**
- **Combustion Air Box Cover MUST be removed when adjusting manifold pressure.**
- **Any major change in gas flow requires changing burner orifice size.**

Manifold Gas Pressure Adjustment

NOTE: Gas supply pressure **MUST** be within minimum and maximum values listed on rating plate. Pressures are usually set by gas suppliers.
Make adjustment to manifold pressure with burners operating and combustion air box cover removed.

1. Remove combustion air box cover.
2. Connect U–Tube manometer to the tapped opening on the outlet side of gas valve. Use manometer with a 0–12 inches water column range.
3. Turn gas **ON,** fire the furnace and remove adjustment screw cover on gas valve.
4. Turn counterclockwise to decrease pressure and clockwise to increase.
5. Set pressure to value shown in **Figure 17**. Refer to **Important Notes** in **Figure 17**. Pressure is also listed on furnace rating plate.
6. When pressure is set, replace adjustment screw cover on gas valve.
7. Replace combustion air box cover.

NOTE: Adjustment screw cover **MUST** be replaced on gas valve **BEFORE** reading manifold pressure and operating furnace.

High Altitude Air Pressure Switch

Altitudes over 4,000 ft. require a different air pressure switch than the one installed at the factory. Consult your distributor for part number and availability. In Canada, provincial codes may govern installation of switch. Check with governing authorities.

Changing Orifices for High Altitude

WARNING

Electrical shock, fire or explosion hazard.

Turn OFF electric power (at disconnect) and gas supply (at manual valve in gas line) when installing orifices. Installation of orifices requires a qualified service technician.

Failure to properly install orifices can result in property damage, personal injury and/or death.

NOTE: Main burner orifices can be changed for high altitudes.

1. Disconnect gas line from gas valve.
2. Remove combustion box front cover and manifold from furnace.
3. Remove the orifices from the manifold and replace them with properly sized orifices.
4. Tighten orifices so there is $1\frac{1}{16}''$ (27mm) from the faces of the orifices to the back side of the manifold, **Figure 20**.
5. Reinstall manifold and combustion air box cover. Ensure burners do **NOT** bind on new orifices.

Figure 18 — **High Altitude Pressure Chart 2000–4999 ft. (Natural Gas)**

Heat Value Btu/Cu.Ft.	Elevation Above Sea Level			
	0–1999	2000–2999	3000–3999	4000–4999
800	3.5	3.5	3.5	3.5
850	3.5	3.5	3.5	3.2
900	3.5	3.2	3.2	2.9
950	3.5	3.1	2.8	2.6
1000	3.5	2.8	2.5	2.3
1050	3.2	2.5	2.3	3.5
1100	2.9	2.3	3.5	3.3

Shaded box requires orifice change to a #44.
No Shading indicates factory installed orifice and manifold pressure change only.

Figure 19 — **High Altitude Pressure Chart 5000–7999 ft. (Natural Gas)**

Heat Value Btu/Cu.Ft.	Elevation Above Sea Level		
	5000–5999	6000–6999	7000–7999
800	3.2	2.9	2.7
850	2.9	2.6	2.3
900	2.6	2.3	3.5
950	2.3	3.5	3.3
1000	3.5	3.3	3.0
1050	3.3	3.0	2.7
1100	3.0	2.7	2.4

Shaded box requires orifice change to a #44.
No Shading indicates factory installed orifice and manifold pressure change only.

Figure 20 — **Changing Orifices**

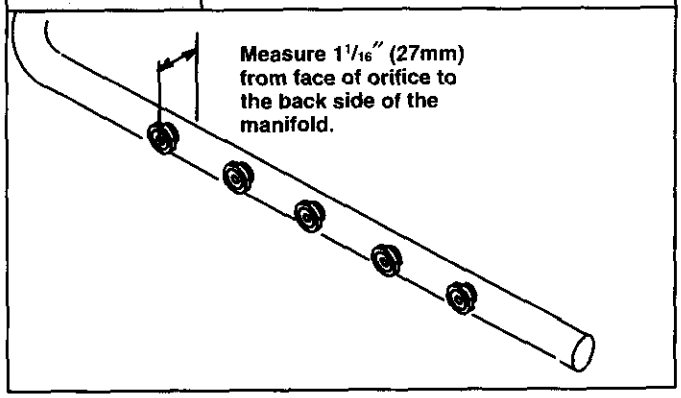

Natural Gas Input Rating Check

NOTE: The gas meter can be used to measure input to furnace. Rating is based on a natural gas BTU content of 1,000 BTU's per cubic meter. Check with gas supplier for actual BTU content.

1. Make sure combustion air box cover is in place and closed before performing the following steps.

Piping

2. Turn **OFF** gas supply to all appliances and start furnace.

3. Time how many seconds it takes the smallest dial on the gas meter to make one complete revolution. Refer to **Example**.

Example			
Natural Gas BTU Content	**No. of Seconds Per Hour**	**Time Per Cubic Meter in Seconds**	**BTU Per Hour**
1,000	3,600	48	75,000
1,000 x 3,600 ÷ 48 = 75,000 BTUH			

NOTE: If meter uses a 2 cubic foot dial, divide results (seconds) by two.

4. Relight all appliances and ensure all pilots are operating.

Piping

Gas Piping Requirements

1. Determine the minimum pipe size from the tables in **Figure 22** and **Figure 23**, basing the length of the run from the main line, gas meter or source to the furnace.

2. Properly size gas pipe to handle combined appliance load or run gas pipe directly from gas meter or LP gas regulator.

3. Install correct pipe size for run length and furnace rating.

4. Measure pipe length from gas meter or LP second stage regulator.

Connections

NOTE: Refer to **Figure 21** for the general layout at the furnace. The rules listed apply to natural and LP gas pipe installations.

1. Use black iron or steel pipe and fittings or other pipe approved by local code.

2. Use ground joint unions and install a drip leg no less than 3 inches long to trap dirt and moisture before it can enter gas valve.

3. Use two pipe wrenches when making connections to prevent gas valve from turning.

4. Install a manual shut–off valve and tighten all joints securely.

Figure 21 Typical Gas Piping

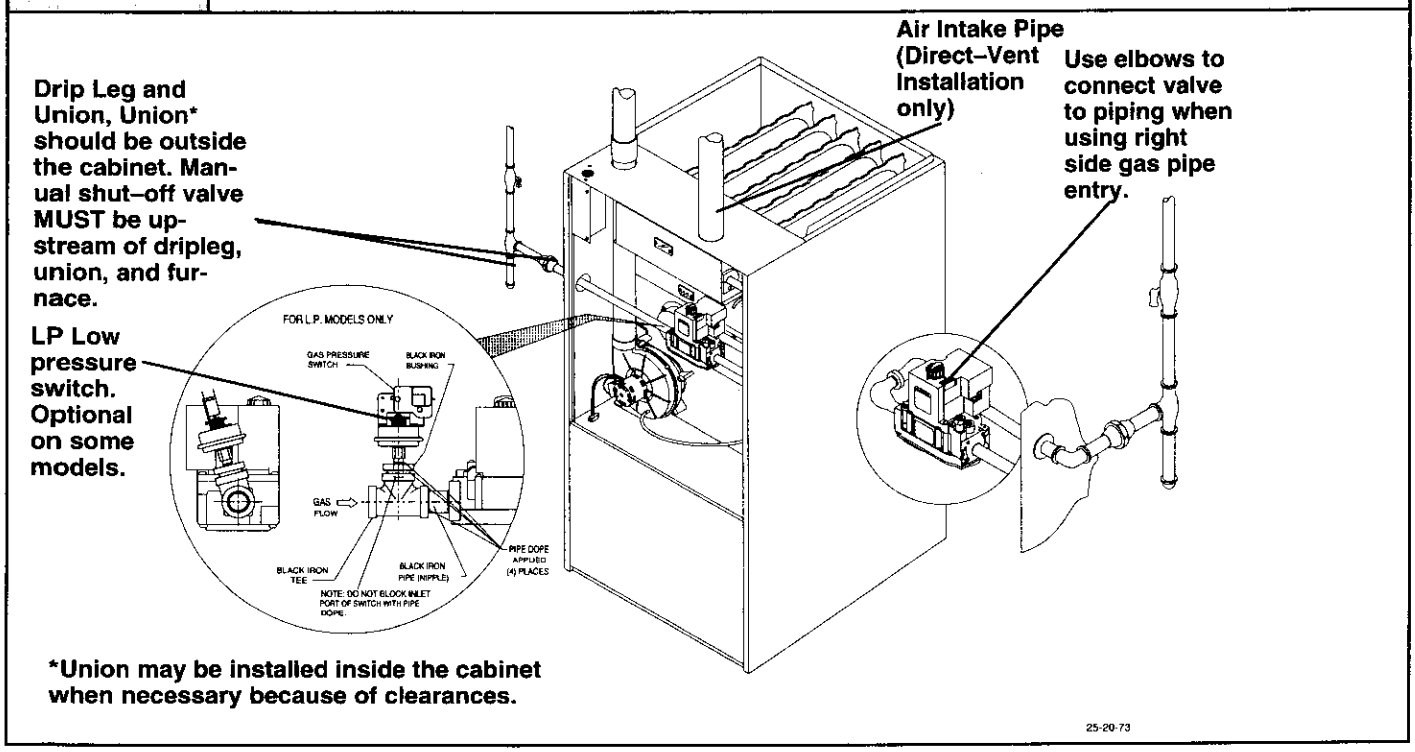

Additional LP Connection Requirements

1. Have a licensed LP gas dealer make all connections at storage tank and check all connections from tank to furnace.

2. If copper tubing is used, it **MUST** comply with limitation set in National Fuel Gas Code or CGA codes.

3. Two–stage regulation of LP gas is recommended.

Figure 22 — Natural Gas Pipe Sizes/Capacity

Natural Gas Capacity BTU Per Hour Input (In Thousands)						
Pipe Length (Feet)	Pipe Size I.D.					
	3/8"	1/2"	3/4"	1"	1 1/4"	1 1/2"
10	72	132	278	520	1,050	1.600
20	49	92	190	350	730	1,100
30	40	73	152	285	590	890
40	34	63	130	245	500	760
50	30	56	115	215	440	670
60	27	50	105	195	400	610

NOTE: Piping that is too small will prevent the proper amount of gas from reaching the furnace.

Figure 23 — LP Gas Pipe Sizes/Capacity

LP Gas Capacity BTU Per Hour Input (In Thousands)							
Pipe Length (Feet)	Copper Tubing O.D.				Iron Pipe I.D.		
	3/8"	1/2"	5/8"	3/4"	1/2"	3/4"	1"
10	39	92	199	329	275	567	1,071
20	26	62	131	216	189	393	732
30	21	50	107	181	152	315	590
40	19	41	90	145	129	267	504
50	—	37	79	131	114	237	448
60	—	35	72	121	103	217	409

NOTE: Copper tubing for gas supply MUST comply with limitations in National Fuel Gas code, reference 2.6.3 Metallic Tubing

NOTE: If a gas connector is used, it **MUST** be acceptable to local authority. Connector may **NOT** be used inside the furnace or be secured or supported by the furnace or ductwork. Connectors **MUST** comply with one of the following standards or a superseding standard.

- ANSI Z21.24a-1983, *Metal Connectors for Gas Appliances*
- ANSI Z21.45b-1983, *Flexible Connectors of Other Than All-Metal Construction for Gas Appliances.*

2. Use pipe joint compound on external (male) threads **ONLY**. Joint compound **MUST** be resistant to any chemical action of LP gases (**Figure 24**).

Figure 24 — Proper Piping Practice

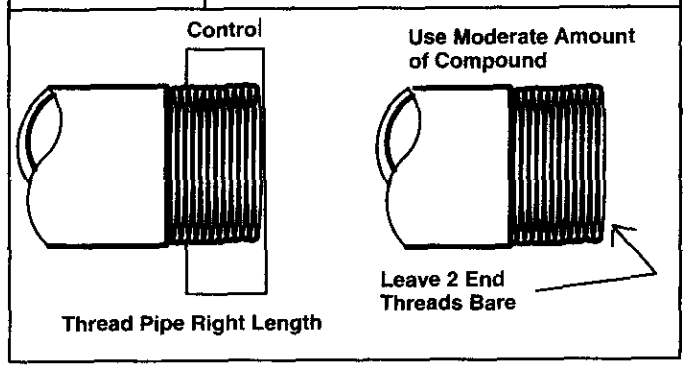

Final Check

1. This furnace **MUST** be isolated from the gas supply piping system by closing its individual manual shut-off valve during any pressure testing of the gas supply system at pressures equal to or less than 1/2" PSIG (3.5 kPa).
2. Test all pipes for leaks.
3. Gas pressure **MUST NOT** exceed 1/2" PSIG to gas valve. Checking gas piping above 1/2" PSIG requires the furnace and manual shut-off valve to be disconnected during testing.
4. Apply soap suds (or a liquid detergent) to each joint. Bubbles forming indicate a leak.
5. Correct even the smallest leak at once.
6. If orifices were changed, make sure they are checked for leakage.

Startup

NOTE: Refer to *Starting The Unit* in the ***Users Information Manual.***

CAUTION

If any sparks, odors or unusual noises occur, immediately shut OFF power to furnace. Check for wiring errors or obstruction to blower.

7. Electrical Wiring

WARNING

Electrical shock hazard.

Turn OFF electric power at fuse box or service panel before making any electrical connections and ensure a proper ground connection is made before connecting line voltage.

Failure to do so can result in property damage, personal injury and/or death.

Grounding

NOTE: The furnace **MUST** be electrically wired and grounded in accordance with local codes or, in the absence of local codes, with the electrical codes of the country having jurisdiction. Electronic controls and furnace will **NOT** operate unless properly grounded. A ground lug wire is provided for ground connection. Use an approved copper connector from furnace to service panel or properly driven ground rod. See Appendix.

Polarizing

NOTE: To insure safe, reliable operation, unit **MUST** be polarized. Proper polarity is shown in **Figure 25.** The white wire is neutral and the black wire is hot.

Labeling

CAUTION

Label all wires prior to disconnection when servicing controls. Wiring errors can cause improper and dangerous operation.

Power Supply

NOTE: Line voltage circuit is completely factory wired. Make all line voltage connections inside furnace junction box. **ALL** electrical work **MUST** conform with local codes, ordinances and the national electrical code, NFPA 70–1990 or current edition.

1. Run #14 AWG hot and neutral wires from a 15 amp circuit breaker. Ground wire gauge **MUST** meet or exceed codes.
2. Do **NOT** connect furnace to existing lighting or other circuit.
3. Do **NOT** complete line voltage connections until furnace is permanently grounded.
4. Make all line voltage and ground connections with copper wires.
5. Complete line voltage connections inside connection box . See **Figure 25**.

Figure 25 | **Electrical Connections**

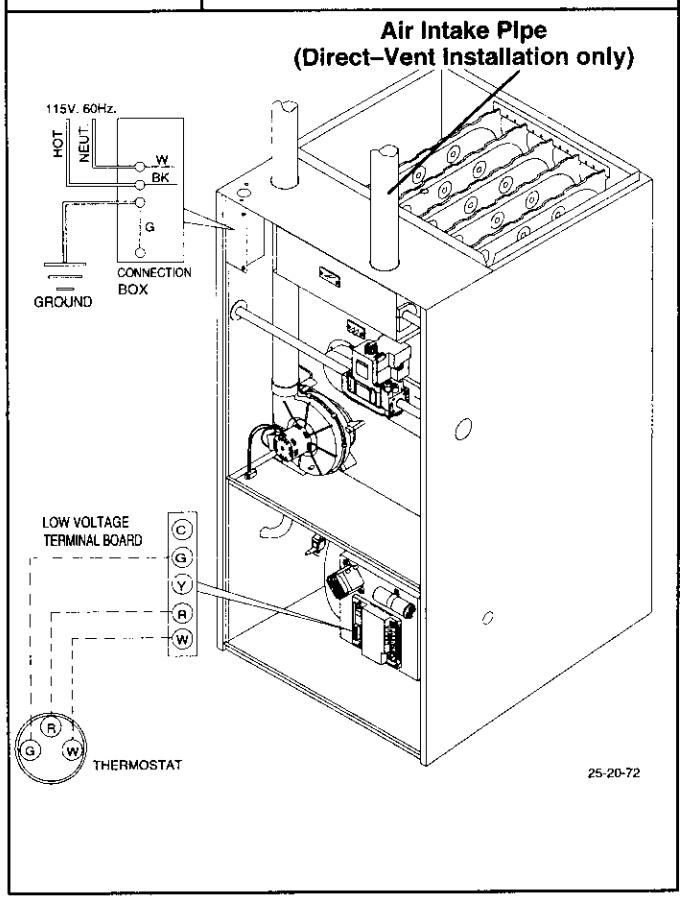

Thermostat

NOTE: Thermostat location has an important effect on the operation of the unit. Follow instructions included with thermostat for correct mounting and wiring.

Heat Anticipator

- Set thermostat heat anticipator in accordance with thermostat instructions and actual measured value. To measure heat anticipator, do the following:

1. Wrap 10 loops of single strand, insulated thermostat wire around the prongs of an amp meter. Set the scale on the amp meter to measure no more than 10 amps.
2. Connect the uninsulated ends of this wire jumper across terminals **R** and **W** on the subbase. (Multi–stage thermostats use **RH** and **W**) Do **NOT** attach thermostat to subbase.
3. Fire the thermostat for about one minute. Read the amp meter. Divide the amp reading by 10 and set anticipator to this number.

4. Remove wires from subbase and attach thermostat to subbase.

Optional Equipment

NOTE: All wiring (except thermostat) from furnace to optional equipment **MUST** conform to the temperature limitations of local codes or, in the absence of local codes, with the electrical codes of the country having jurisdiction. See Appendix. Install wiring in accordance with manufacturer's instructions.

Humidifier/Electronic Air Cleaner

The furnace is pre–wired for humidifier and/or electronic air cleaner connection.

CAUTION

Do NOT exceed 115V/0.8 amp maximum currrent load for both the EAC terminal and the HUM terminal combined.

1. For connection of a humidifier, break the designated tabs ("**HUM**" and "**N**") on the electronic fan control located in the circulating blower compartment (**Figure 26**). This will expose the terminals required for connection to the 115v power supply.

2. For connection of an electronic air cleaner, break the designated tabs ("**EAC**" and "**N**") on the electronic fan control located in the circulating blower compartment (**Figure 26**). This will expose the terminals required for connection to the 115v power supply.

NOTE: The humidifier will be powered when the combustion blower is energized. The electronic air cleaner will be powered anytime the thermostat calls. However, the electronic air cleaner is **NOT** energized during continuous fan operation controlled by the electronic fan control.

Wiring for Air Conditioning

1. Replace heating only thermostat and cable with heat/cooling thermostat and 4-wire thermostat cable if required.

2. Connect from **W**, **G**, **R** and **Y** on thermostat to **W**, **G**, **R** and **Y**on furnace low voltage terminal board.

3. Connect wires from contactor on condensing unit to **Y** and **C** on furnace low voltage terminal board.

4. Follow all instructions with condensing unit and evaporator coil.

NOTE: The furnace electronic fan control will change fan speeds automatically as heat and cool are selected at the thermostat.

Fan Control

The fan control is preset at the factory with a fixed blower **ON** delay of 60 seconds in the heating mode. The blower **OFF** timing is preset at 120 seconds. If desired, the fan **OFF** delay can be reset to obtain the longest **OFF** time while still maintaining comfort levels. See **Figure 26** and **Figure 27**.

Figure 26 Fan Timer Connections

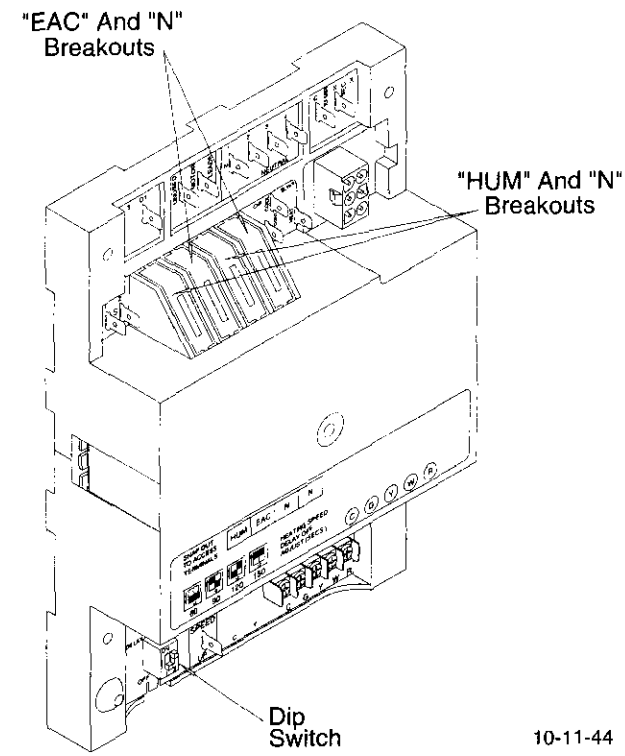

Figure 27 Fan OFF Delay DIP switch Settings

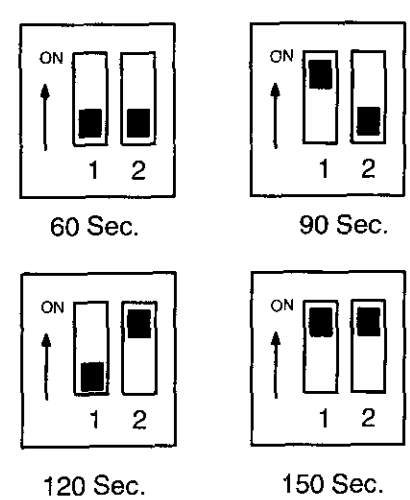

Wiring

8. Ductwork and Filter

WARNING

Carbon monoxide poisoning hazard.

Do NOT draw return air from inside a closet or utility room. Return air duct MUST be sealed to furnace casing.

Failure to properly seal duct can result in personal injury and/or death,

Installation

NOTE: Design and install air distribution system to comply with Air Conditioning Contractors of America manuals and/or NFPA pamphlets 90A and 90B or other approved methods that conform to local codes and good trade practices.

1. When furnace supply ducts carry air outside furnace area, seal return air duct to furnace casing and terminate duct outside furnace space .
2. Install air conditioning cooling coil (evaporator) on outlet side of furnace.
3. If separate evaporator and blower units are used, install good sealing dampers for air flow control. Chilled air going through the furnace could cause condensation and shorten the furnace life.
4. It is recommended for furnaces installed without a cooling coil that the outlet duct be provided with a removable access panel. This panel should be accessible when the furnace is installed so that the heat exchanger can be viewed for inspections. The access panel **MUST** be sealed to prevent leaks.

NOTE: Dampers (field supplied) can be either automatic or manual. Manually operated dampers **MUST** be equipped with a means to prevent furnace or air conditioning operation unless damper is in the full heat or cool position.

WARNING

Carbon monoxide poisoning hazard.

Cool air passing over heat exchanger can cause condensate to form resulting in heat exchanger failure.

This could result in personal injury and/or death.

Connections

NOTE: Return air can enter through either side, both sides, or the bottom. When the furnace is located in an area near or adjacent to the living area, the system should be carefully designed with returns to minimize noise transmission through the return grille. Any blower moving a high volume of air will produce audible noise which could be objectionable to when the unit is located very close to living areas. It is advisable to route the return air ducts under the floor or through the attic.

1. For side connections using a 16″ x 25″ filter, cut out the embossed area shown in **Figure 28**. This will provide a 14½″ x 22½″ approximate opening.

NOTE: A 125,000 Btuh furnace requires two side returns or a bottom return for 5 tons cooling. If two side returns are used it does **NOT** allow the condensate drain line to be run out the side of furnace. If line **MUST** be run out the side, an optional standoff filter rack with one 20x25x1 filter is needed. Install optional filter rack on side of furnace opposite the side where condensate drain line will exit.

2. Bottom returns can be made by removing the knock-out panel in the furnace base. Do **NOT** remove knock-out except for a bottom return. A 20″ x 25″ filter can be used for a bottom return for a100,000 Btuh furnace. A 25″ x 25″ filter is required for 125,000 Btuh furnaces.
3. An optional 20" x 25" duct standoff is available to be used in lieu of one filter on each side of furnace, or optional 16" x 25" external filter racks are available.
4. Installation of locking-type dampers are recommended in all branches, or in individual ducts to balance system's air flow.
5. Non-combustible, flexible duct connectors are recommended for return and supply connections to furnace.
6. If air return grille is located close to the fan inlet, install at least one, 90 degree air turn between fan and inlet grille to reduce noise.

NOTE: To further reduce noise, install acoustical air turning vanes and/or line the inside of duct with acoustical material.

Sizing

Existing or new ductwork **MUST** be sized to handle the correct amount of airflow for either heating only or heating and air conditioning.

Insulation

1. Insulate ductwork installed in attics or other areas exposed to outside temperatures with a minimum of 2 inch insulation and vapor barrier.
2. Insulate ductwork in indoor unconditioned areas with a minimum of 1 inch insulation with indoor type vapor barrier.

Filters

NOTE: The size and type(s) of filter supplied with the furnace will handle the airflow required if central air conditioning is used with the furnace.

Use either filter type:

- Washable, high velocity filter based on a maximum air flow rating of 600 FPM.
- Disposable, low velocity filter based on a maximum air flow of 300 FPM when used with filter grille.

NOTE: Disposable, low velocity filters may be replaced with washable, high velocity filter providing they meet the minimum size areas listed in **Table 3** . Washable, high velocity filters can be replaced **ONLY** with same type and size.

Filter Installation

When installing or removing a bottom mounted filter, slide the two side filter clips to the back of the furnace **BEFORE** installing or removing. This will allow the filter to clear the front raised edge of the furnace. Insert filter into side clips first and push filter back until it is fully engaged into back clip. When filter is in place, slide clips back into place midway on filter as shown in **Figure 30.**

Refer to **Figure 31** through **Figure 32** for guidelines to install filters. Furnaces which require larger filter media and have limited clearances on one side of furnace, require a standoff filter rack, see **Figure 31**, available from your distributor. Refer to **Table 3** for filter media needed.

CAUTION

If filters are only suitable for heating application, advise homeowner that filter size may need to be increased if air conditioning is added.

Figure 28 Side Return Air Cutout

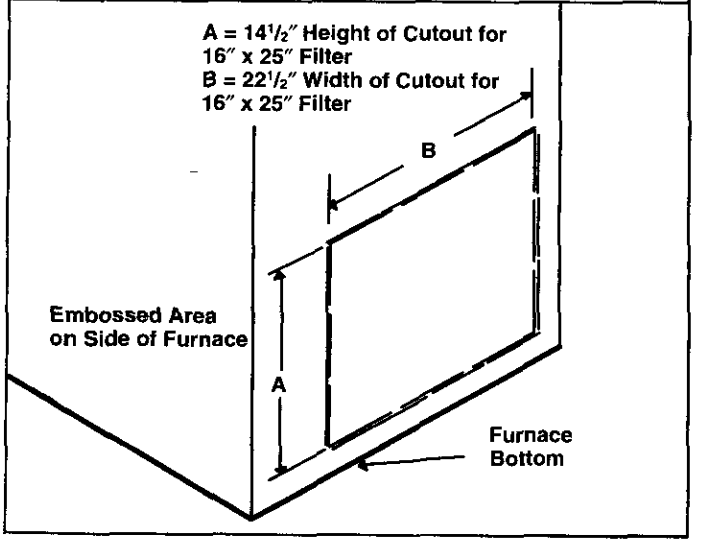

Addition Of Air Conditioning

When a refrigeration coil is used in conjunction with this unit, it must be installed on the discharge side of the unit to avoid condensation on the heat exchanger. The coil installation instructions must be consulted for proper coil location and installation procedures. With a parallel flow arrangement, dampers must be installed to prevent chilled air from entering the furnace. If manually operated dampers are used, they must be equipped with a means to prevent operation of either unit unless the damper is in full heat or full cool position.

A 3" (75mm) clearance is required on the right side of the furnace in order to run the condensate drain line. Copper, iron or plastic tubing may be used for the condensate drain line.

Figure 29 Side Mounted Filter Rack

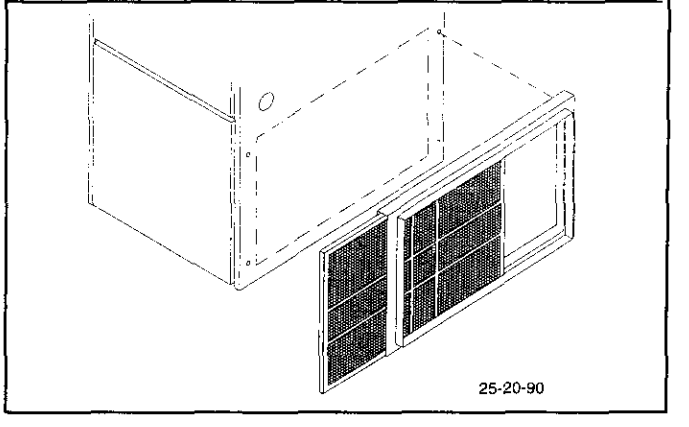

Figure 30 Bottom Mounted Filter Rack

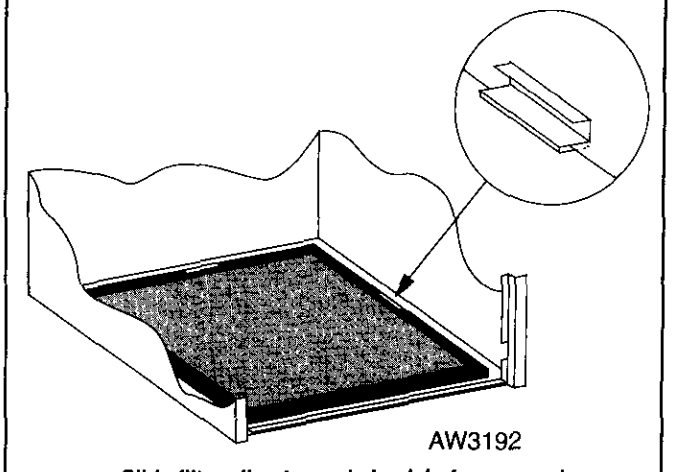

Slide filter clips towards back before removing

Ductwork

Figure 31 Standoff Filter Rack

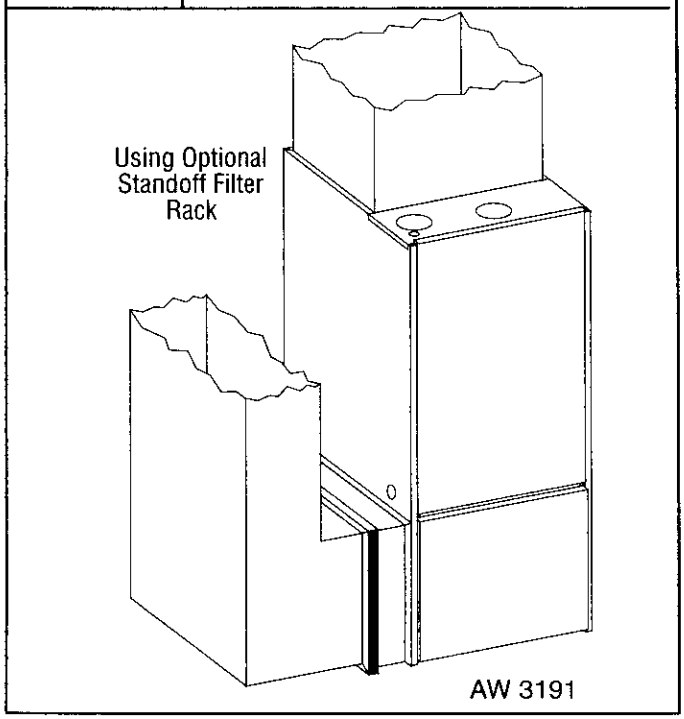

Figure 32 Filters Installed on Two Sides

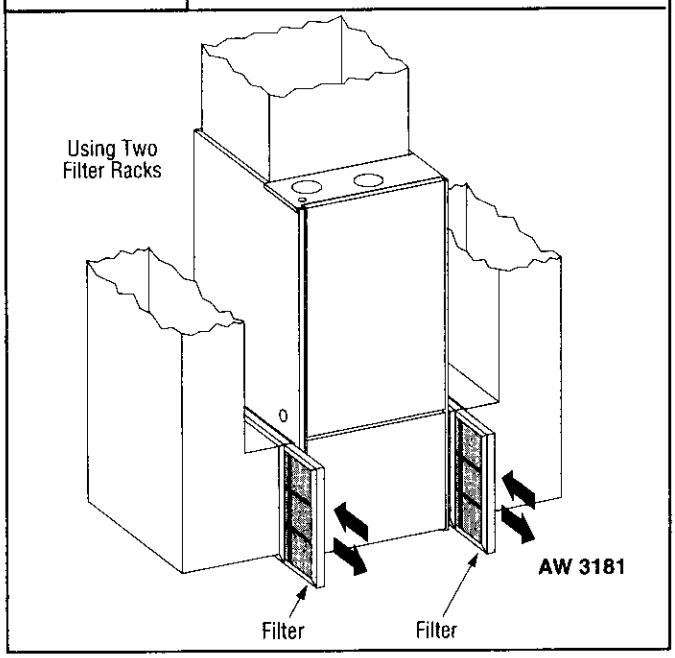

Ductwork

Table 3 Recommended Filter Area

Airflow		Disposable Low Velocity (300 FPM Air Flow)					Washable High Velocity (600 FPM Air Flow)				
		Min. Surface Area		Recommended Nominal Size			Min. Surface Area		Recommended Nominal Size		
m³ /hr	CFM	m²	Sq. In.	mm	Inches	Qty.	m²	Sq. In.	mm	Inches	Qty.
375	800	.25	384	510 x 635	20 x 25	1	0.23	350	355 x 635	14 x 25	1
425	900	.28	432	510 x 635	20 x 25	1	0.23	350	355 x 635	14 x 25	1
470	1000	.30	480	510 x 760	20 x 30	1	0.23	350	355 x 635	14 x 25	1
520	1100	.34	528	510 x 760	20 x 30	1	0.23	350	355 x 635	14 x 25	1
565	1200	.37	576	355 x 635	14 x 25	2	0.23	350	355 x 635	14 x 25	1
615	1300	.40	4624	355 x 635	14 x 25	2	0.23	350	355 x 635	14 x 25	1
660	1400	.43	672	405 x 635	16 x 25	2	0.23	350	355 x 635	14 x 25	1
710	1500	.46	720	405 x 635	16 x 25	1	0.26	400	406 x 635	16 x 25	1
755	1600	.50	768	510 x 635	20 x 25	2	0.26	400	406 x 635	16 x 25	1
800	1700	.53	816	510 x 635	20 x 25	2	0.32	500	508 x 635	20 x 25	1
850	1800	.56	864	510 x 635	20 x 25	2	0.32	500	508 x 635	20x 25	1
895	1900	.59	912	510 x 760	20 x 30	2	0.32	500	508 x 635	20 x 25	1
945	2000	.62	960	510 x 760	20 x 30	2	0.32	500	508 x 635	20 x 25	1

9. Checks and Adjustments

Main Burner Flame Check

NOTE: The main burner flames can be observed through the sight glass in the combustion box in most instances.

1. Check for the following (**Figure 33**):
   - Stable, blue flames
   - Flames do **NOT** touch sides of heat exchanger

NOTE: Dust may cause orange tips or wisps of yellow, but **MUST NOT** have solid, yellow tips.

2. Check main burner flames monthly.
3. If any problems with main burner flames are noted, it may be necessary to clean burners or adjust gas pressures. This procedure is to be done by a qualified service technician.

Pilot Burner Flame Check

NOTE: The pilot burner flames can be observed through the sight glass in the combustion box. If view is not adequate, you may need to remove combustion box cover.

Check for the following :

- Stable blue flame
- Flame is compact and points toward the burners

The pilot flame should envelop $^3/_8$″ to $^1/_2$″ (10–13mm) of the tip of the igniter sensor. See **Figure 34**. If flame is **NOT** correct, do the following:

1. Remove the combustion box cover. See ***Cleaning Burners*** in ***Cleaning Heat Exchangers*** chapter.
2. Remove pilot adjustment cover screw on gas valve.
3. Turn inner adjustment screw clockwise to decrease or counterclockwise to increase pilot flame.
4. Replace cover screw and combustion cover.

Figure 33 Main Burner

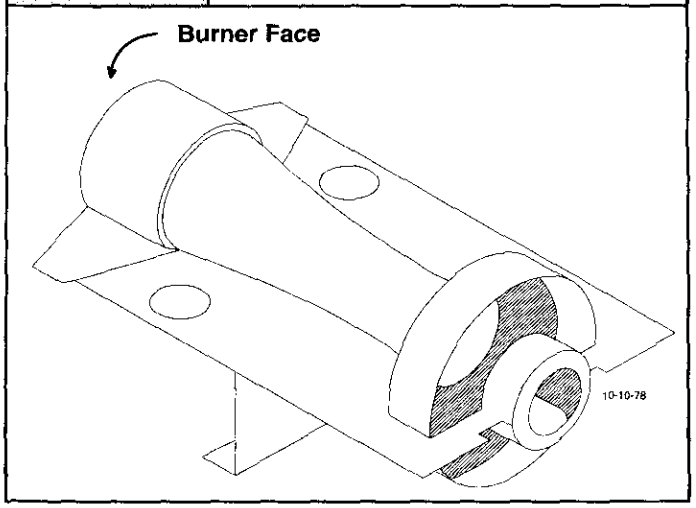

Figure 34 Pilot Burner

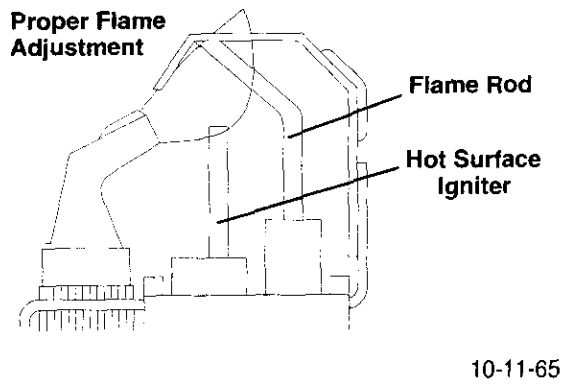

Limit Control Check

WARNING

Fire hazard.

Limit control is factory preset and can NOT be adjusted. Use ONLY manufacturer's authorized replacement parts.

Failure to do so can result in personal injury and/or death.

1. Operate furnace continuously for 15 minutes.
2. Block return air grille(s) and check that main burners go out and blower continues to run.
3. Remove material blocking return air grille(s). Check that main burners relight after a short cool down period.

Fan Control Check

Figure 35 | **Fan OFF Delay DIP switch Settings**

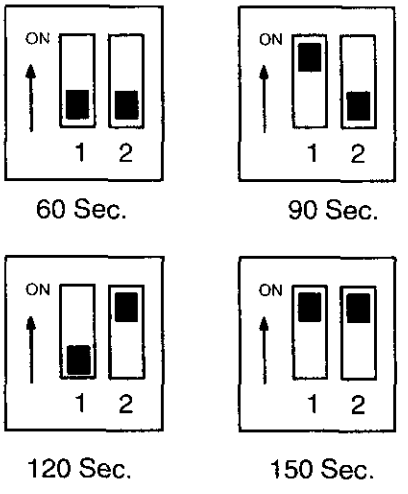

1. The fan **OFF** control switch is preset at the factory, but, if necessary can be adjusted to obtain a satisfactory comfort level.

NOTE: The fan control is preset to turn **ON** 60 seconds after the burners light. It can be adjusted to turn **OFF** at 60, 90, 120, and 150 seconds. Refer to **Figure 35**.

2. Operate the furnace and ensure that the blower turns **ON** and **OFF** at the appropriate time to provide the desired comfort level.

Temperature Rise Check

NOTE: Temperature rise is the difference between supply and return air temperature.

1. Place thermometers in supply and return air registers as close to furnace as possible, avoiding direct radiant heat from heat exchangers.
2. Operate furnace continuously for 15 minutes with all registers and duct dampers open.
3. Take reading and compare with range specified on rating plate.
4. If the correct amount of temperature rise is **NOT** obtained, it may be necessary to change blower speed. A higher blower speed will lower the temperature rise. A lower blower speed will increase the temperature rise.

NOTE: The blower speed **MUST** be set to give the correct air temperature rise through the furnace as marked on the rating plate.

WARNING

Electrical shock hazard.

Turn OFF power to furnace before changing speed taps.

Failure to do so can result in personal injury and/or death.

Note: The blower is factory set for heating and cooling. If it is necessary to change speeds, refer to steps below.

5. Refer to **Figure 37** for location of the heating and cooling speed taps located on the electronic fan control as well as location of unused blower motor speed leads. Use the chart (**Figure 36**) to determine the blower motor speed settings.

6. Change the heat or cool blower motor speed by removing the motor lead from the "**Heat**" or "**Cool**" terminal and replace it with the desired motor speed tap from the "**Unused Blower Speed Tap**" location. Connect the wire previously removed from the "**Heat**" or "**Cool**" terminal to the vacated "**Unused Blower Speed Tap**" terminal.

Figure 36 | **Blower Speed Chart**

Wire Color	Motor Speed
Black	High
Orange	Med–High
Blue	Medium–Low
Red	Low

7. If the same speed must be used for both heating and cooling, remove the undesired motor speed lead from the "**Heat**" or "**Cool**" terminal and connect that lead to the open terminal at "**Unused Blower Speed Tap**" location. Attach a jumper between the "**Heat**" and "**Cool**" terminals and the remaining motor speed lead.
Note: For motors with (4) speed leads, it may be necessary to tape off the terminal of the motor speed lead removed from the "**Heat**" or "**Cool**" terminal with electrical tape if an open terminal is not available at the "**Unused Blower Speed Tap**" location.

Figure 37 — **Blower Speed Taps**

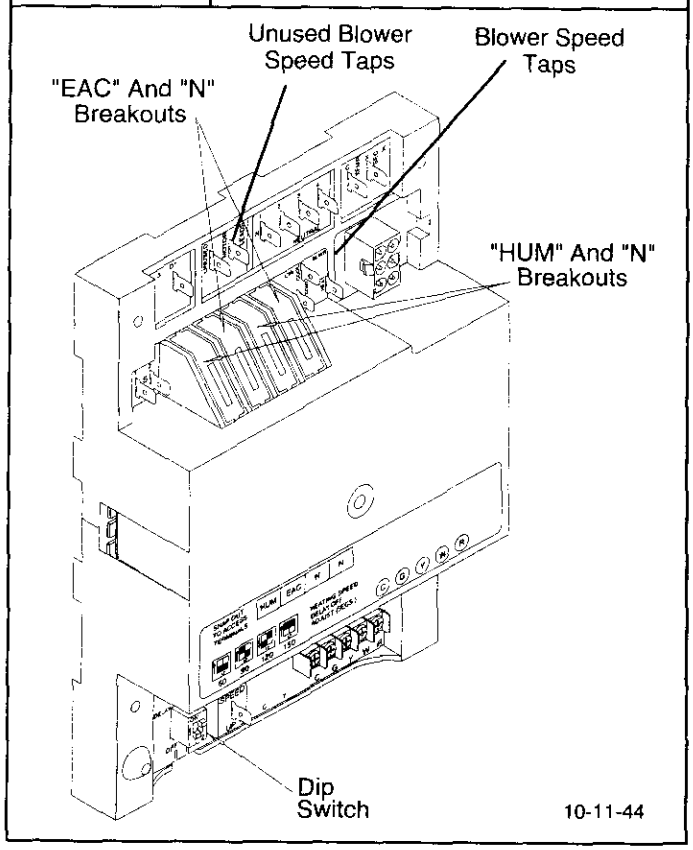

Continuous Fan Operation

A terminal is provided on the electronic fan control located in the circulating blower compartment for operation of the continuous fan option. This connection is intended for the low speed motor tap, and has a lower contact rating (8 amps) than the heat and cool taps. When the low speed blower lead is connected to this terminal, this will provide low speed blower operation whenever the other two speeds (**Heat** or **Cool**) are not energized.

Thoroughly check the system after modification to ensure the proper operation of the circulating air blower in all modes of operation.

Separate speed selections for Heat, Cool, and Continuous Fan

Connect low speed lead from circulating motor to the "**Cont**" terminal at the electronic fan control. The appropriate motor leads should already be connected to the "**Heat**" and "**Cool**" terminals.

Note: See next section *"Heating and Continuous Blower Speed the Same"* if low speed is required for heating to obtain desired temperature rise.

Heating and Continuous Blower Speed the Same

If it is necessary to operate the heating speed and continuous blower speed using the same blower speed, connect a jumper between the "**Heat**" and "**Cont**" terminals on the electronic fan control.

Note: There should be only **ONE** motor lead going to the "**Heat**" and "**Cont**" terminals.

Checks

10. Furnace Maintenance

CAUTION

It is recommended that the furnace be inspected and serviced on an annual basis (before the heating season) by a qualified service technician.

If you perform maintenance on the furnace yourself, remember that certain mechanical and electrical skills, plus specialized tools are required to properly perform maintenance. Personal injury or death may result if you are **NOT** properly trained. You should call your installing dealer or place of purchase if you are uncertain about your ability to perform maintenance.

WARNING

Electrical shock hazard.

Turn OFF power to furnace before performing any maintenance or removing panels.

Failure to do so can result in personal injury and/or death.

Filters

NOTE: Dirty filters are the most common cause of inadequate heating or cooling performance.

- Inspect filters monthly
- Replace disposable type filters before they become clogged.
- Use water and mild detergent to clean washable type filters.
- Replace filters with same size and type

NOTE: Some filters are marked with an arrow to indicate the proper direction of air flow through the filter. The arrow **MUST** point in the direction of air flow. Refer to section on filters in this manual.

Replacement

NOTE: The filter rack will normally be found outside the furnace blower compartment, but alternate locations may be somewhere in the return air duct, a remote filter rack attached to the outside of the furnace, or a remote filter grille.

- Remote filter grilles and return air cabinets will usually have a hinged door or removable panel to access filter.
- Filter racks attached to the furnace will usually be made so the filter simply slides out one side. Use **ONLY** the same size filter.
- Filter type must be same unless replacing a disposable low-velocity type with a washable high–velocity type.

1. Turn **OFF** electric power at circuit breaker or disconnect switch.
2. Inspect filter then replace or clean washable type. If filter is aluminum mesh type, coat it with filter coating spray.
3. Ensure all panels are tightly closed before restoring power.

Blower Motor

- If oil ports are provided on the motor, periodic lubrication is recommended. If no oil ports are provided, the motor is considered permanently lubricated and no lubrication is required.
- When oil ports are provided, lubricate by adding 1/2 teaspoon (2cc) of SAE #10W30 motor oil to each motor bearing. (This applies to motors with oil tubes or cap plugs in motor end bells **ONLY**.)
- Combustion Air Blower Motor does **NOT** require oiling.

CAUTION

Do NOT over oil or use 3 in 1 oil, penetrating oil, WD40 or similar oils. Use of these may damage motors.

Furnace Inspection

NOTE: A properly adjusted gas furnace will **NOT** require frequent cleaning. Inspect furnace regularly to ensure safe and efficient operation. A brief monthly inspection that does **NOT** require disassembly is recommended. Have furnace inspected and cleaned (if required) by a qualified service technician annually.

Vent Pipe

- Ensure vent pipe and combustion air intake are clear and free of obstructions.
- Check vent pipe for tight joints, secure attachment to furnace and sagging pipe.
- Horizontal sections of vent pipe **MUST** slope upward, away from furnace, 1/4 inch per foot (6 mm per 300mm).

Return Air Duct

- Check that return air ducts are sealed to furnace casing and that duct is in good physical condition.
- Duct **MUST** terminate outside the space with **NO** holes or inlets in furnace space.

Furnace Base

- The floor or furnace base **MUST** be in good physical condition.

Furnace Interior

- Remove the front panel and use a flashlight to inspect the visible part of the heat exchanger, burners and spark igniter, or pilot.
- Remove the access panel on the outlet supply duct so you can see the top of the heat exchanger. Remove combustion air box cover and shine a bright light into the heat exchanger sections where the burners are and observe for any leaks of light from the access panel in the supply duct. If leaks of light are observed do **NOT** operate furnace, call a qualified service technician.
- Check for loose soot and give particular attention to deterioration from corrosion or other sources.
- If soot or deterioration is found inside furnace do **NOT** operate furnace and call a qualified service technician.

WARNING

Carbon monoxide poisoning hazard.

If any leaks are observed or if soot or deterioration is found inside furnace do NOT operate furnace. Call a qualified service technician.

Failure to do so can result in personal injury and/or death.

Pilot Burners

- Periodically check pilot burner for flame characteristics. Flame should be stable, blue, and envelop the tip of the sensor.

Main Burners

- Allow the furnace to run approximately 10 minutes then inspect the main burner flames.
- Contact a qualified service agency at once if an abnormal flame develops.
- Replace burners if extremely rusted, crushed, or if burner ports have collapsed.

Condensate Disposal

NOTE: A condensate neutralizer cartridge, if used in the drain line, will require some maintenance.

- Disassemble and clean cartridge prior to each heating season, or if drain line become plugged.
- Inspect the drain line and overflow line at least monthly. If the condensate neutralizer cartridge becomes plugged, the condensate will flow through the overflow line. If this happens, clean both cartridge and drain lines.
- To clean, disconnect the drain line cartridge and unscrew end cap from cartridge. Pour the neutralizer out and thoroughly flush neutralizer and inside of cartridge with water. Pour neutralizer back into cartridge, adding neutralizer if cartridge is less than 3/4 full.
- Reassemble and seal threaded connections with silicone rubber (bathtub caulk) or pipe dope approved for plastic pipe. See repair parts sections in the parts list to order replacement neutralizer. Condensate is acidic, do **NOT** use for any purpose.

11. Cleaning Heat Exchangers

WARNING

Electrical shock, fire or explosion hazard.

Turn OFF electric power at disconnect and gas supply at manual shutoff valve. Have qualified service technician perform the following procedures.

Failure to do so can result in property damage, personal injury and/or death .

If filters are inadequate or **NOT** maintained, it may be necessary to clean the exterior surface of the secondary heat exchanger to obtain proper airflow. If the primary heat exchanger requires cleaning, it can be completed without removing or cleaning the secondary heat exchanger.

The **ONLY** time it should be necessary to disassemble and clean the interior of both the primary and secondary heat exchangers would be due to a sooting condition caused by abnormal combustion. If heavy sooting condition is observed, heat exchangers need replacement. Repair cause of sooting.

Primary Heat Exchanger

Accessing

NOTE: The following parts and assemblies **MUST** be removed before the heat exchanger can be cleaned.

1. Disconnect electric power.
2. Disconnect gas supply line at union and at gas valve and remove gas pipe from furnace. Disconnect electrical leads at gas valve.
3. Remove screws from the perimeter of the combustion box. Remove combustion box with care to avoid damage.
4. Remove four (4) screws that hold combustion blower and remove combustion blower.
5. Remove screws around collector box and remove collector box.

Cleaning

1. Use a long flexible handle brush and vacuum cleaner with long narrow attachment.
2. Insert long handle brush into heat exchanger and clean. If any large particles are observed, be careful not to dislodge them and push them further into heat exchanger.
3. Use long narrow vacuum attachment to clean any remaining particles.
4. Reassemble in reverse order.

Secondary Heat Exchanger

Accessing

NOTE: The following parts and assemblies **MUST** be removed before the heat exchanger can be cleaned.

1. Disconnect electric power.
2. Remove the wiring quick connects on blower partition.
3. Remove the two retaining screws holding blower in position on the slide rails.
4. Blower can now be removed by pulling assembly from furnace. Support blower next to furnace to avoid having to disconnect wiring.

Exterior Cleaning

1. Using a stiff bristle brush and a vacuum cleaner, clean dirt and lint build-up from bottom side of secondary heat exchanger. Brush strokes must be **with** the fin surface to avoid damage to the fins. Use a fin comb to straighten fins.
2. Inspect and clean blower wheel using brush and vacuum. Be careful **NOT** to dislodge balance weights (clips) that may be on the blower wheel.
3. Reassemble in reverse order unless you are going to clean the interior. If so, see next section.

CAUTION

Fins on secondary heat exchanger have sharp edges. Wear gloves to prevent possible cuts.

Failure to do so can result in personal injury.

Accessing Interior of Secondary Heat Exchanger

NOTE: The following parts and assemblies **MUST** be removed before the heat exchanger can be cleaned. These steps assume you have already accessed the exterior of the secondary heat exchanger as outlined above.

1. Remove screws holding combustion air blower to the front partition and remove combustion blower.
2. Remove screws holding collector box and remove collector box.

Interior Cleaning

1. Using a garden hose, flush interior of secondary heat exchanger from inlet side located behind the lower part of the collector box . Flush until water is clear
2. Remove drain line from bottom of transition box located in the blower compartment.
3. Remove two(2) screws holding transition box in place and remove transition box.
4. Back flush transition assembly with garden hose. Shake to loosen any particles and flush again until water is clear.

5. Inspect interior passages of secondary heat exchanger for heavy soot. If heavy soot is indicated, an abnormal condition exists or has existed. Correct abnormal condition and see you distributor about replacement of heat exchangers.
6. Reassemble in reverse order.

Cleaning Burners

1. Follow steps 1–3 in *Accessing Primary Heat Exchanger.*
2. Remove screws holding front cover of combustion box and remove cover and gasket.
3. Remove three(3) screws holding manifold and remove manifold.
4. Remove igniter assembly and sensor (if applicable) from burners and carefully lay in bottom of combustion box.

CAUTION

Igniter assembly is fragile. Extreme care must be taken to protect igniter from damage.

5. Remove two(2) screws holding burner tray and remove burner assembly.
6. Gently strike orifice end of burners on a block of wood to remove any dirt or lint build up in the tube.
7. Use a brush to clean any visible soot or scale.
8. Vacuum burners and combustion box.

Reassembly

NOTE: Reassemble all parts in reverse order as removed, with the following instructions.

1. Replace any torn or defective insulation.
2. Replace all gaskets and parts that are broken or deteriorated.
3. Test for gas leaks after reassembly. Use a soapy solution on all joints. **AL**L leaks **MUST** be repaired immediately.
4. Perform an operational check of the furnace.

12. Glossary of Terms

Cased cooling coil
A coil assembly which attaches to upflow furnaces **ONLY.** A cased cooling coil is unable to support the weight of a downflow furnace. See Coil box.

Category IV
A direct vent central furnace which operates with a positive vent pressure and with a vent gas temperature less than 140° F. above its dewpoint.

Coil box
A sheet metal box designed to support the weight of a furnace. A coil box requires that a coil be added to complete the assembly.

Combustible Materials
As defined by the *National Fuel Gas Code,* "As pertaining to materials adjacent to or in contact with heat producing appliances, vent connectors, gas vents, chimneys, steam and hot water pipes, and warm air ducts, shall mean materials made of or surfaced with wood, compressed paper, plant fibers, or other materials that are capable of being ignited and burned. Such material shall be considered combustible even though flame–proofed, fire retardant treated, or plastered."

Combustion air
Air drawn in from indoors or outdoors to supply air for the combustion process.

Confined space
A confined space is defined as an area with less than 50 cubic feet(1.4m^3) per 1,000 BTUH input rating for all gas appliances installed in the area.
Some structures have unusually tight construction, and **MUST** have additional air brought in. See manual for instructions concerning unusually tight construction.

Fan assisted appliances
An appliance which uses a motorized fan to pull in combustion airand help exhaust combustion air. See **Combustion Air** definition.

Gas Connector
The flexible gas hose which connects the gas supply to the furnace. Gas connector can **NOT** be used inside furnace or be secured or supported by the furnace or ductwork.

Heat anticipator
A variable resistor inside a thermostat which generates a small amount of heat. The purpose of the anticipator is to reduce temperature swings. The anticipator must be set to match the current output by the low voltage transformer.

Horizontal venting
Vent of a gas appliance where vent exits or terminates through a side wall of a structure.

Manometer
A test gauge for measuring air pressure differentials in airflows. Calibrated to show in inches of water column. ("w.c.).

Sweep elbows
Elbows used in venting which have a larger turning radius than standard elbows. Can be 45° or 90° radii. Allow more latitude in venting because vent runs can be turned without the restrictions normally found in 90 degree elbows.

Type FSP
A direct vent central furnace system in which the combustion air connections, the flue gas connections, and the vent air intake terminal may be specified by the furnace manufacturer to be supplied by the installer.

Unconfined space
An unconfined space is defined as an area having a minimum volume of 50 cubic feet(1.4m^3) per 1,000 Btuh total input rating for all gas appliances in area. Refer to **Figure 9** for minimum area required.

13. Appendix of Helpful Information

Canadian Codes

Applicable Natural Gas and Propane Codes

National Standards;

Natural Gas Installation Code. CAN/CGA – B149.1–M91 (or current edition).

Propane Installation Code. CAN/CGA – B149.2–M91 (or current edition).

Applicable Electrical Codes

Canadian Electrical Code Part 1. CSA Standard C22.1 – 1990 (or current edition).

For a nominal charge, these code books can be ordered from:

Canadian Gas Association
55 Scarsdale Road
Don Mills, Ontario M3B ZR3

Canadian Standards Association
178 Rexdale Boulevard
Rexdale, Ontario M9W IR3

United States Codes

Applicable Natural Gas and Propane Codes

National Fuel Gas Code, ANSI Z223.1–1988 (or current edition).

Applicable Electrical Codes

National Electrical Code
ANSI/NFPA No. 70–1990 (or current edition)

For a nominal charge, these code books can be ordered from:

American National Standards Institute
1430 Broadway
New York, NY 10018