Digital Palmcorder® MultiCam™ Camcorder

Panasonic®

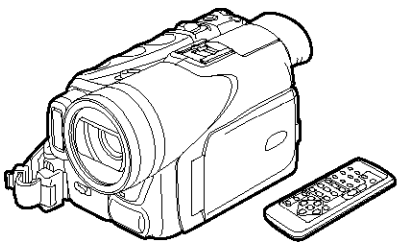

Digital Video Camcorder

Operating Instructions

Model No. PV-GS70

MultiMediaCard™ SD™ Mini DV CERTIFIED USB™

Before attempting to connect, operate or adjust this product,
please read these instructions thoroughly.
Spanish Quick Use Guide is included.
Guía para rápida consulta en español está incluida.

For USA assistance, please call: 1-800-211-PANA(7262) or send e-mail to : consumerproducts@panasonic.com

For Canadian assistance, please call: 1-800-561-5505 or visit us at www.panasonic.ca

LSQT0693A

Things You Should Know

Thank you for choosing Panasonic!

You have purchased one of the most sophisticated and reliable products on the market today. Used properly, we're sure it will bring you and your family years of enjoyment. Please take time to fill in the information on the right.

The serial number is on the tag located on the underside of your Palmcorder. Be sure to **retain this manual** as your convenient Palmcorder information source.

Date of Purchase	
Dealer Purchased From	
Dealer Address	
Dealer Phone No.	
Model No.	PV-GS70
Serial No.	

Safety Precautions

WARNING: TO PREVENT FIRE OR SHOCK HAZARD,
DO NOT EXPOSE THIS EQUIPMENT TO RAIN OR MOISTURE.

Your Mini DV Palmcorder is designed to record and play back in Standard Play (SP) mode and Long Play (LP) mode

It is recommended that only cassette tapes that have been tested and inspected for use in Palmcorder with the Mini DV mark be used.

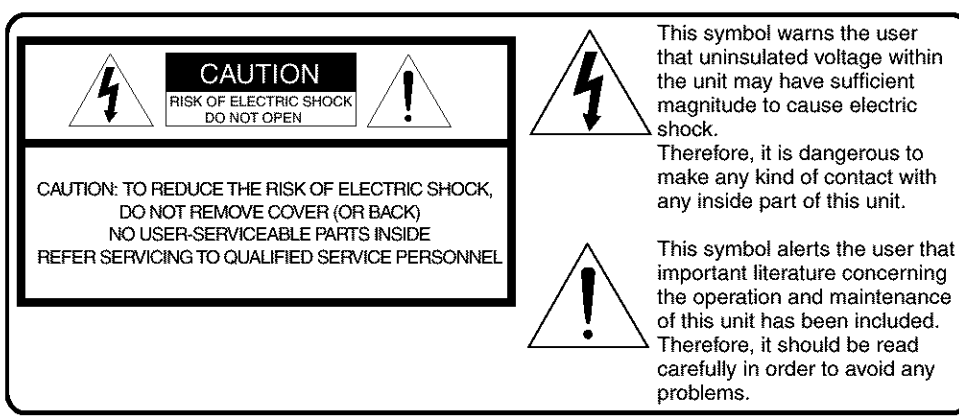

The above markings are located on the appliance bottom cover.

FCC Note: This equipment has been tested and found to comply with the limits for a Class B digital device, pursuant to Part 15 of the FCC Rules. These limits are designed to provide reasonable protection against harmful interference in a residential installation. This equipment generates, uses, and can radiate radio frequency energy and, if not installed and used in accordance with the instructions, may cause harmful interference to radio communications. However, there is no guarantee that interference will not occur in a particular installation. If this equipment does cause harmful interference to radio or television reception, which can be determined by turning the equipment off and on, the user is encouraged to try to correct the interference by one or more of the following measures:

- Reorient or relocate the receiving antenna.
- Increase the separation between the equipment and receiver.
- Connect the equipment into an outlet on a circuit different from that to which the receiver is connected.
- Consult the dealer or an experienced radio/TV technician for help.

FCC Caution: To assure continued compliance, follow the attached installation instructions and use only shielded interface cables with ferrite core when connecting to computer or peripheral devices. Any changes or modifications not expressly approved by the party responsible for compliance could void the user's authority to operate this equipment.

Declaration of Conformity

Trade Name: Panasonic
Model No.: PV-GS70
Responsible party: Matsushita Electric Corporation of America
One Panasonic Way, Secaucus, NJ 07094
Support Contact: Panasonic Consumer Electronics Company
1-800-211-PANA (7262)

This device complies with Part 15 of the FCC Rules. Operation is subject to the following two conditions: (1)This device may not cause harmful interference, and (2) this device must accept any interference received, including interference that may cause undesired operation.

CAUTION: TO PREVENT FIRE OR SHOCK HAZARD AND ANNOYING INTERFERENCE, USE THE RECOMMENDED ACCESSORIES ONLY.

CAUTION: TO PREVENT ELECTRIC SHOCK, MATCH WIDE BLADE OF PLUG TO WIDE SLOT, FULLY INSERT.

CAUTION: DANGER OF EXPLOSION IF BATTERY IS INCORRECTLY REPLACED. REPLACE ONLY WITH THE SAME OR EQUIVALENT TYPE.

- Since this product gets hot during use, operate it in well ventilated place; do not install this equipment in a confined space such as a bookcase or similar unit.

IMPORTANT SAFETY INSTRUCTIONS

1) Read these instructions.

2) Keep these instructions.

3) Heed all warnings.

4) Follow all instructions.

5) Do not use this apparatus near water.

6) Clean only with dry cloth.

7) Do not block any ventilation openings. Install in accordance with the manufacturer's instructions.

8) Do not install near any heat sources such as radiators, heat registers, stoves, or other apparatus (including amplifiers) that produce heat.

9) Do not defeat the safety purpose of the polarized or grounding-type plug. A polarized plug has two blades with one wider than the other. A grounding type plug has two blades and a third grounding prong. The wide blade or the third prong are provided for your safety. If the provided plug does not fit into your outlet, consult an electrician for replacement of the obsolete outlet.

10) Protect the power cord from being walked on or pinched particularly at plugs, convenience receptacles, and the point where they exit from the apparatus.

11) Only use attachments/accessories specified by the manufacturer.

12) Use only with the cart, stand, tripod, bracket, or the table specified by the manufacturer, or sold with the apparatus. When a cart is used, use caution when moving the cart/apparatus combination to avoid injury from tip-over.

S3125A

13) Unplug this apparatus during lightning storms or when unused for long periods of time.

14) Refer all servicing to qualified service personnel. Servicing is required when the apparatus has been damaged in any way, such as when the power-supply cord or plug is damaged, liquid has been spilled or objects have fallen into the apparatus, the apparatus has been exposed to rain or moisture, does not operate normally, or has been dropped.

Precautions

USE & LOCATION

- **TO AVOID SHOCK HAZARD ...** Your Palmcorder and power supply should not be exposed to rain or moisture. Do not connect the power supply or operate your Palmcorder if it gets wet. Your Palmcorder has been designed for outdoor use, however it is not designed to sustain direct exposure to water, rain, sleet, snow, sand, dust, or a direct splashing from a pool or even a cup of coffee. This action could permanently damage the internal parts of your Palmcorder. Do not attempt to disassemble this unit. There are no user serviceable parts inside. Unplug your Palmcorder from the power supply before cleaning.
- **DO NOT AIM YOUR PALMCORDER AT THE SUN OR OTHER BRIGHT OBJECTS.**
- **DO NOT LEAVE THE PALMCORDER WITH THE EVF AIMED DIRECTLY AT THE SUN AS THIS MAY CAUSE DAMAGE TO THE INTERNAL PARTS OF THE EVF.**
- **DO NOT EXPOSE YOUR PALMCORDER TO EXTENDED HIGH TEMPERATURE ...** Such as, in direct sunlight, inside a closed car, next to a heater, etc... This action could permanently damage the internal parts of your Palmcorder.
- **AVOID SUDDEN CHANGES IN TEMPERATURE ...** If the unit is suddenly moved from a cold place to a warm place, moisture may form on the tape and inside the unit.
- **DO NOT LEAVE YOUR PALMCORDER OR THE POWER SUPPLY TURNED ON WHEN NOT IN USE.**
- **STORAGE OF YOUR PALMCORDER ...** Store and handle your Palmcorder in a manner that will not subject it to unnecessary movement (avoid shaking and striking). Your Palmcorder contains a sensitive pick-up device which could be damaged by improper handling or storage.

CARE

- **TO CLEAN YOUR PALMCORDER ...** Do not use strong or abrasive detergents when cleaning your Palmcorder body.
- **TO PROTECT THE LENS ...** Do not touch the surface of the lens with your hand. Use a commercial Palmcorder lens solution and lens paper when cleaning the lens. Improper cleaning can scratch the lens coating.
- **TO PROTECT THE FINISH OF YOUR PALMCORDER ...** Before handling your Palmcorder, make sure your hands and face are free from any chemical products, such as suntan lotion, as it may damage the finish.

This class B digital apparatus complies with CANADIAN ICES-003.

U.S.A. CONSUMERS ONLY

This Product has a fluorescent lamp that contains a small amount of mercury. It also contains lead in some components. Disposal of these materials may be regulated in your community due to environmental considerations. For disposal or recycling information please contact your local authorities, or the Electronics Industries Alliance: <http://www.eiae.org.>

U.S.A./CANADA CONSUMERS: ATTENTION:

A lithium ion/polymer battery that is recyclable powers the product you have purchased. Please call 1-800-8-BATTERY for information on how to recycle this battery.

Before opening the CD-ROM package, please read the following.

End User License Agreement (for USB Driver, SD Viewer and DV STUDIO)

You ("Licensee") are granted a license for the Software defined in this End User Software Agreement ("Agreement") on condition that you agree to the terms and conditions of this Agreement. If Licensee does not agree to the terms and conditions of this Agreement, promptly return the Software to Matsushita Electric Industrial Co., Ltd. ("Matsushita"), its distributors or dealers from which you made the purchase.

Article 1 License
Licensee is granted the right to use the software, including the information recorded or described on the CD-ROM, instruction manuals, and any other media provided to Licensee (collectively "Software"), but all applicable rights to patents, copyrights, trademarks and trade secrets in the Software are not transferred to Licensee.

Article 2 Use by a Third Party
Licensee may not use, copy, modify, transfer or allow any third party, whether free of charge or not, to use, copy or modify the Software, except as expressly provided for in this Agreement.

Article 3 Restrictions on Copying the Software
Licensee may make a single copy of the Software in whole or a part solely for back-up purpose.

Article 4 Computer
Licensee may use the Software only on one computer, and may not use it on more than one computer.

Article 5 Reverse Engineering, Decompiling or Disassembly
Licensee may not reverse engineer, decompile, or disassemble the Software, except to the extent either of them is permitted under law or regulation of the country where Licensee resides. Matsushita, or its distributors will not be responsible for any defects in the Software or damage to Licensee caused by Licensee's reverse engineering, decompiling, or disassembly of the Software.

Article 6 Indemnification
The Software is provided "AS-IS" without warranty of any kind, either expressed or implied, including, but not limited to, warranties of non-infringement, merchantability and/or fitness for a particular purpose. Further, Matsushita does not warrant that the operation of the Software will be uninterrupted or error free. Matsushita or any of its distributors will not be liable for any damage suffered by Licensee arising from or in connection with Licensee's use of the Software.

Article 7 Export Control
Licensee agrees not to export or re-export to any country the Software in any form without the appropriate export licenses under regulations of the country where Licensee resides, if necessary.

Article 8 Termination of License
The right granted to Licensee hereunder will be automatically terminated if Licensee contravenes of any of the terms and conditions of this Agreement. In the event, Licensee must destroy the Software and related documentation together with all the copies thereof at Licensee's own expense.

Before opening the CD-ROM package, please read the following.

G.726 Audio Decoder End User License Agreement

YOU SHOULD CAREFULLY READ THE FOLLOWING TERMS AND CONDITIONS. THIS IS A LEGAL DOCUMENT WHICH CONSTITUTES YOUR AGREEMENT AS END USER FOR THE USE OF THE SOFTWARE IN THAT PACKAGE. BY INSTALLING THIS SOFTWARE, YOU INDICATE YOUR ACCEPTANCE OF THIS LIMITED USE SOFTWARE LICENSE.
IF YOU DO NOT AGREE TO THE TERMS OF THIS AGREEMENT, PROMPTLY RETURN THE DISK PACKAGE AND THE ACCOMPANYING ITEMS WITH YOUR SALES RECEIPT TO YOUR VENDOR.

LIMITED USE SOFTWARE LICENSE

You, the Licensee, are granted a non-exclusive software license to use the Software and related documentation supplied herein. The terms of this license are as follows:

1) You may use the Software on a single computer at a single location.
2) As you, the Licensee, own the physical media on which the Software is recorded, the Licensor of the Software retains title and ownership thereof, regardless of the form or media in or on which the original and other copies may exist. This License is not a sale of the original Software or any copy thereof.
3) You are required to protect the copyright of the Software. You may NOT distribute or otherwise make the Software or documentation available to any third party without the prior written consent of the Licensor. You may be held legally responsible for any copyright infringement that is caused or encouraged by your failure to abide by the terms of this License.
4) You may NOT modify or alter the Software. Any portion of the Software that is merged into or used in conjunction with other software will continue to be the property of the Licensor and will be subject to the terms of this License.
5) You are permitted to copy the Software for exclusive use as your working copy. Any such copy must contain the same copyright notice and proprietary marking as the original Software.
6) You may not transfer or assign the Software or this License to any other person without the prior written consent of the Licensor. Any authorized transferee of the Software shall be bound by the same terms and conditions of this License and, in such case your license is automatically terminated. In no event may you transfer, assign, rent, sell, or otherwise dispose of the Software on a temporary or permanent basis except as expressly provided herein.
7) This License is effective until terminated. This License will terminate automatically without notice from the Licensor if you fail to comply with any provision of this Agreement. Upon termination you will destroy the Software together with all copies and modifications in any form.
8) The Software has been tested and the documentation has been reviewed. However, THE LICENSOR MAKES NO WARRANTY OR REPRESENTATION INCLUDING THE IMPLIED WARRANTIES OF MERCHANTABILITY AND FITNESS FOR USE, ALL OF WHICH ARE EXCLUDED. Some states do not allow exclusion of implied warranties so the above disclaimer may not apply to you.
9) The Licensor will not be liable or in any way responsible for any incidental or consequential economic or property damage in connection with the Software or its documentation. Some states do not allow the exclusion of incidental or consequential damages so the above exclusion may not apply to you.
10) (Notice to U.S. Government End Users) The Software and Documentation are "Commercial Items", as that term is defined at 48 C.F.R. 2.101, consisting of "Commercial Computer Software" and "Commercial Computer Software Documentation", as such terms are used in 48 C.F.R. 12.212 or 48 C.F.R. 227.7202, as applicable. Consistent with 48 C.F.R. 12.212 or 48 C.F.R. 227.7202-1 through 227.7202-4, as applicable, the Commercial Computer Software and Commercial Computer Software Documentation are being licensed to U.S. Government end users (A) only as Commercial Items and (B) with only those rights as are granted to all other end users pursuant to the terms and conditions herein.

Contents

Before Using

Standard Accessories 10
Quick Guide 12
To View the Playback Picture 12
Controls and Components 13
Remote Controller 15
Power Supply 18
Charging Time and Available Recording Time 18
Lens Cap and Easy-Grip Strap 19
Attaching the Shoulder Strap 20
Inserting a Cassette 20
Turning on/off the Palmcorder and Selecting Modes 20
Using the Viewfinder 21
Using the LCD Monitor 21
Using the Menu Screen 22
List of Menus 23
Setting Date and Time 27
Internal Lithium Battery Recharge 27
LP Mode 27
Audio Recording Mode 27

CAMERA Mode

Recording 28
Quick Start 29
Self-timer Recording 30
PhotoShot Recording on the DV Cassette 30
Zoom In/Out Functions 31
Digital Zoom Function 32
Fade In/Out Functions 32
Digital Electronic Image Stabilizer Function 33
Cinema Function 33
Backlight Compensation Function 33
MagicPix Function 34
Soft Skin Function 34
Wind Noise Reduction Function 35
Recording in Special Situations (Program AE) 35
Manual Shutter Speed Adjustment 36
Manual Iris Adjustment (F Number) 36
Manual Focus Adjustment 37
Recording in Natural Colors (White Balance) 37
Adjusting White Balance Manually 38
Using the Built-in Flash 39
Digital Effect Functions 40

VCR Mode

Playing Back 43
Finding a Scene You Want to Play Back 44
Slow Motion Playback 45
Still Playback/Still Advance Playback 45
Finding the End of a Recording (Blank Search Function) 46
Playback Zoom Function 46
Index Search Functions 47
Playback Digital Effect Functions 48
Playing Back on Your TV 50
Audio Dubbing 51

Special Features

Using a Memory Card 52
Recording on the Memory Card 52
Playing Back Files from the Memory Card 57
Copying Pictures from a Memory Card to a Cassette 60
Slide Show 61
Creating a Title 62
Inserting a Title 63
Protecting the Files on a Memory Card from Accidental Erasure (File Lock) 64
Deleting the Files Recorded on a Memory Card 65
Formatting a Memory Card 66
DPOF Setting 66
Copying your DV Cassette to an S-VHS or VHS Cassette (Dubbing) 67
Copying an S-VHS or VHS Cassette to your DV Cassette 67
Using your Palmcorder with Digital Video Equipment (Dubbing) 68
Using the Software with a Computer 69
Using USB Driver 69
Installing USB Driver 70
Connecting Computer and Palmcorder 71
Using as a Web Camera 72
Using the DV STUDIO 3.1E-SE 74
Using the G.726 Audio Decoder 75
Using the ArcSoft Software 76
To disconnect USB cable safely 78
If you no longer need software or driver (Uninstall) 78
Notes 79

Others

Indications 81
Initializing the Modes 84
Warning/Alarm Indications 84
Notes & Precautions 85
Cautions for Use 93
Explanation of Terms 97
Specifications 99
Palmcorder Accessory System 100
Palmcorder Accessory Order Form (For USA Customers) 101
Before Requesting Service (Problems and Solutions) 102
Request for Service Notice (USA Only) 105
Limited Warranty (For USA Customers) 106
Customer Services Directory 107
Warranty (For Canadian Customers) 108
Index 109
Spanish Quick Use Guide/ Guía española para el uso rápido 111

Standard Accessories

Illustrated on the left are accessories packaged with the Palmcorder.

1) **AC Adaptor, DC Cable and AC Cable (➔ 18)**
   - Supplies power to the Palmcorder.

CAUTION:
This unit will operate on 110/120/220/240 V AC. An AC plug adaptor may be required for voltages other than 120 V AC. Please contact either a local or foreign electrical parts distributor for assistance in selecting an alternate AC plug. We recommend using the accessory power plug adaptor (VJSS0070) in an area which has special AC outlets.

2) **Battery Pack (➔ 18)**
   - Supplies power to the Palmcorder.
3) **Remote Controller and Button-Type Battery (➔ 15, 16, 17)**
4) **MagicWire Remote Control with Narration Mic (➔ 16)**
5) **Lens Cap (➔ 19)**
6) **A/V Cable (➔ 50)**

1)

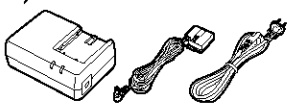

PV-DAC13

2)

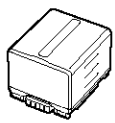

CGA-DU14

3)

CR2025

N2QAEC000003

4)

N2QCBD000030

5)

VYF2904

6)

K2KC4CB00009

7)

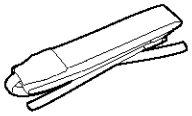

VFC3506

8)

RP-SD008BVE0

9)

VFF0193

10)

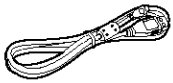

VFA0397

7) Shoulder Strap (➔ 20)
8) SD Memory Card (➔ 79)
9) CD-ROM:
USB Driver (➔ 69)
DV STUDIO 3.1E-SE (➔ 74)
G.726 Audio Decoder (➔ 75)
ArcSoft Software (➔ 76)

- Macintosh is a registered trademark of Apple Computer, Inc. 2001. ArcSoft, the ArcSoft logo, ArcSoft PhotoImpression 4.0, ArcSoft PhotoBase 4.0, ArcSoft Panorama Maker 3.0 and PhotoPrinter 4.0 are trademarks of ArcSoft, Inc.
- Microsoft® Windows®, NetMeeting® and DirectX®, are registered trademarks of the Microsoft Corporation U.S.A.
- Intel®, Pentium®, and Celeron® are the registered trademarks or trademarks of the Intel Corporation.
- All other names, company names, product names, etc. in these instructions are the trademarks or registered trademarks of their respective corporations.
- The names of the products you are using may differ from the names given in the text. Depending on the operating environment and other factors, the contents of the screens used in these instructions may not necessarily match what you will see on your screen.
- Although the screens in these Operating Instructions are shown in English for the sake of example, other languages are supported as well.
- In this Manual, the Panasonic make digital video camera with USB Terminal is referred to as Palmcorder.
- These instructions do not cover the basic operations of the personal computer or define any terms. For this information, refer to the Operating Instructions which accompany your personal computer.

10) USB Cable (➔ 69)

Extremely high precision technology is employed to produce the LCD Monitor screen featuring a total of approximately 113,000 pixels. The result is more than 99.99% effective pixels with a mere 0.01% of the pixels inactive or always lit. However, this is not a malfunction and does not affect the recorded picture.

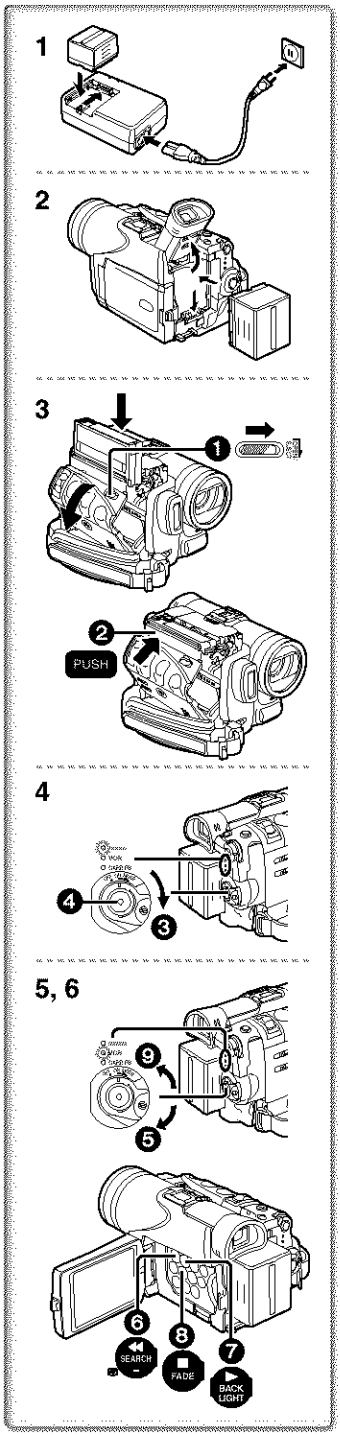

Quick Guide

1 Charge the Battery. (➔ 18)

- Connect the AC Cable to the AC Adaptor and plug it into the AC Wall Outlet.
- Attach the Battery to the AC Adaptor. (This will start the charging process.)
- The [POWER] Lamp and [CHARGE] Lamp light up, and charging starts. When the [CHARGE] Lamp goes off, charging is completed.
- Since the Battery will not be charged when the DC Cable is connected to the AC Adaptor, disconnect it.

2 Attach the Charged Battery to the Palmcorder. (➔ 18)

3 Insert the Cassette. (➔ 20)

- Slide the [OPEN/EJECT] ❶ Lever toward the front and pull down to open the Cassette Compartment.
- Insert the Cassette.
- Press the [PUSH] mark ❷ to load the Cassette.
- Close the outside compartment Cover.

4 Start recording. (➔ 28)

- Turn the Palmcorder on. **(➔ 20)**
- Rotate the Switch ❸ to [ON]. (The [CAMERA] Lamp lights up.)
- Press the ❹ Button. (Recording starts.)
- Press the ❹ Button again to pause the recording.

To View the Playback Picture

5 Switch to the VCR Mode, rewind the tape, and play the tape back. (➔ 43)

- Set the ❺ Switch to VCR mode. (The [VCR] Lamp lights up.)
- Press the ❻ Button. (Rewind the tape.)
- Press the ❼ Button. (Playback starts.)
- Press the ❽ Button. (Playback stops.)

6 Turn the Palmcorder off. (➔ 20)

- Set the ❾ Switch to [OFF].

Controls and Components

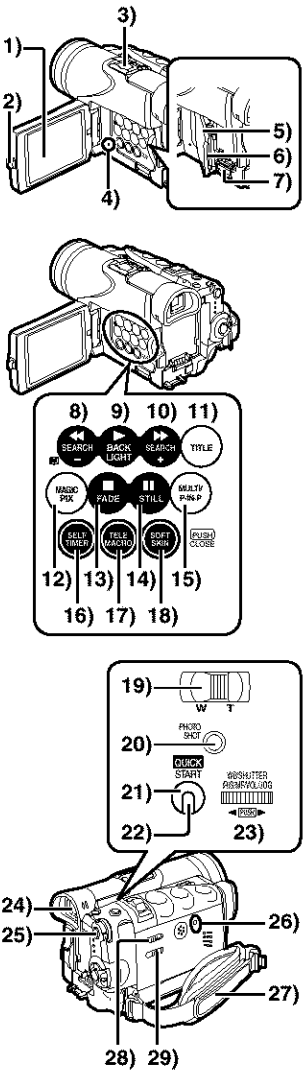

1) LCD Monitor (➜ 21, 96)

- Due to limitations in LCD production technology, there may be some tiny bright or dark spots on the LCD Monitor screen. However, this is not a malfunction and does not affect the recorded picture.

2) LCD Monitor Open Button [PUSH OPEN] (➜ 21)
3) Accessory Shoe
4) Card Access Lamp [ACCESS] (➜ 52)
5) Card Slot Cover (➜ 52)
6) Card Slot (➜ 52)
7) Card Slot Cover Open Lever [OPEN▶] (➜ 52)
8) Rewind/Review Button [◀◀] (➜ 43, 44)
   Reverse Search Button [SEARCH−] (➜ 28)
   Recording Check Button [⟲] (➜ 28)
9) Play Button [▶] (➜ 43, 57, 61)
   Backlight Button [BACK LIGHT] (➜ 33)
10) Fast Forward/Cue Button [▶▶] (➜ 44)
    Forward Search Button [SEARCH+] (➜ 28)
11) Title Button [TITLE] (➜ 63)
12) MAGICPIX Button [MAGICPIX] (➜ 34)
13) Stop Button [■] (➜ 43, 57, 61)
    Fade Button [FADE] (➜ 32)
14) Still Button [❚❚] (➜ 45, 57, 61)
    Camera Still Button [STILL] (➜ 30)
15) Multi-Picture Button [MULTI] (➜ 42, 49)
    Picture-in-Picture Button [P-IN-P] (➜ 41)
16) Self-timer Button [SELF TIMER] (➜ 30)
17) Tele Macro Button [TELE MACRO] (➜ 31)
18) Soft Skin Button [SOFT SKIN] (➜ 34)
19) Zoom Lever [W/T] (➜ 31)
20) PhotoShot Button [PHOTO SHOT] (➜ 30, 53)
21) Quick Start Recording Button [QUICK START] (➜ 29)
22) Quick Start Recording Lamp (➜ 29)
23) Multi-Function Dial [PUSH] (➜ 22, 27, 37, 43, 45)
24) Viewfinder (➜ 21, 96)

- Due to limitations in LCD production technology, there may be some tiny bright or dark spots on the Viewfinder screen. However, this is not a malfunction and does not affect the recorded picture.

25) Menu Button [MENU] (➜ 22)
26) Reset Button [RESET] (➜ 102)
27) Easy-Grip Strap (➜ 19)
28) Mode Selector Switch [AUTO/MANUAL/FOCUS] (➜ 28, 35, 37)
29) Tape/Card Selector [TAPE/CARD/CARD MODE] (➜ 28, 52)

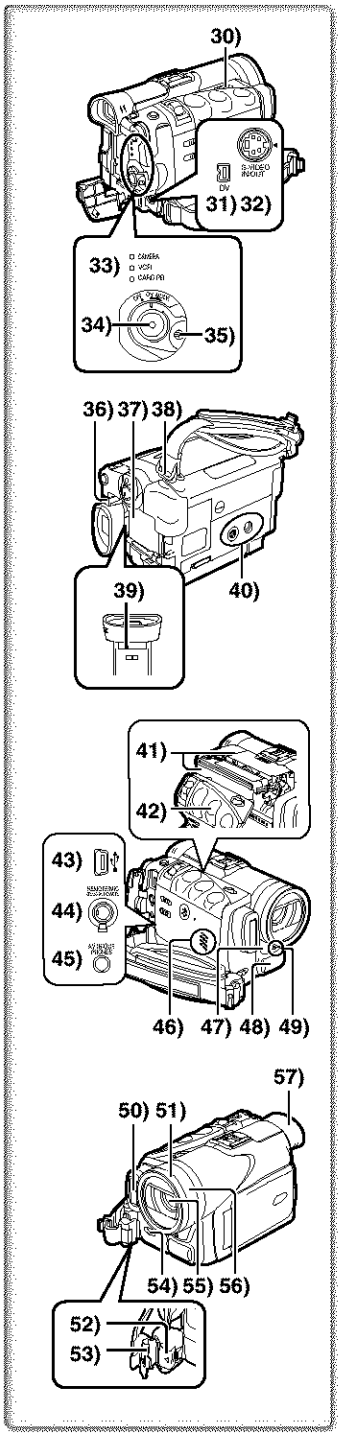

30) Cassette Eject Lever [OPEN/EJECT] (➔ 20)

31) DV Input/Output Terminal [DV] (➔ 68)

- Connect this to the digital video equipment.

32) S-Video Input/Output Jack [S-VIDEO IN/OUT] (➔ 50)

33) Operation Mode Lamps [CAMERA/VCR/CARD PB] (➔ 22, 28, 43, 57)

34) Recording Start/Stop Button (➔ 28, 56)

35) Off/On Mode Selector Switch [OFF/ON/MODE] (➔ 20, 28, 43)

36) Battery Eject Button [PUSH BATT] (➔ 18)

37) Battery Holder (➔ 18)

38) Shoulder Strap Holders (➔ 20)

39) Eyepiece Corrector Knob (➔ 21)

40) Tripod Receptacle

- Use for mounting the Palmcorder on an optional tripod.

41) Cassette Holder (➔ 20)

42) Cassette Compartment Cover (➔ 20)

43) USB Jack (➔ 71)

44) MagicWire Remote Control with Narration Mic Jack [REMOTE] (➔ 16)
Microphone Jack [MIC] (➔ 90)

- Connecting with an external microphone or audio equipment. (When this Jack is in use, the built-in microphone does not operate.)
- When connecting the remote controller to the [PHONES] Socket, the Palmcorder may not operate properly.

45) Audio-Video Input/Output Jack [AV IN/OUT] (➔ 50)
Headphone Jack [PHONES] (➔ 89)

- Connecting an AV Cable to this Jack activates the Palmcorder's built-in speaker, but connecting a headphone, etc. deactivates it.
- When plugging the pin plug of the AV cable into the AV output terminal, plug it in as far as it goes.

46) Speaker

47) Remote Control Sensor (➔ 17)
White Balance Sensor (➔ 38, 98)

48) Microphone (Built-in, stereo)

49) Rec Lamp (➔ 28)

50) Built-in Video Flash (➔ 39)

51) Lens Hood (➔ 97)

52) Easy-Grip Strap Release Button (➔ 19)

53) Easy-Grip Strap Lock Cover (➔ 19)

54) Flash Open Lever [FLASH_] (➔ 39)

55) Lens (LEICA DICOMAR)

- LEICA is a registered trademark of Leica microsystems IR GmbH and DICOMAR is a registered trademark of Leica Camera AG.

56) Focus Ring (➔ 37)

57) Eyecup

Remote Controller

Using the wireless Remote Controller that is supplied with the Palmcorder, most of the Palmcorder functions can be operated from a distance.

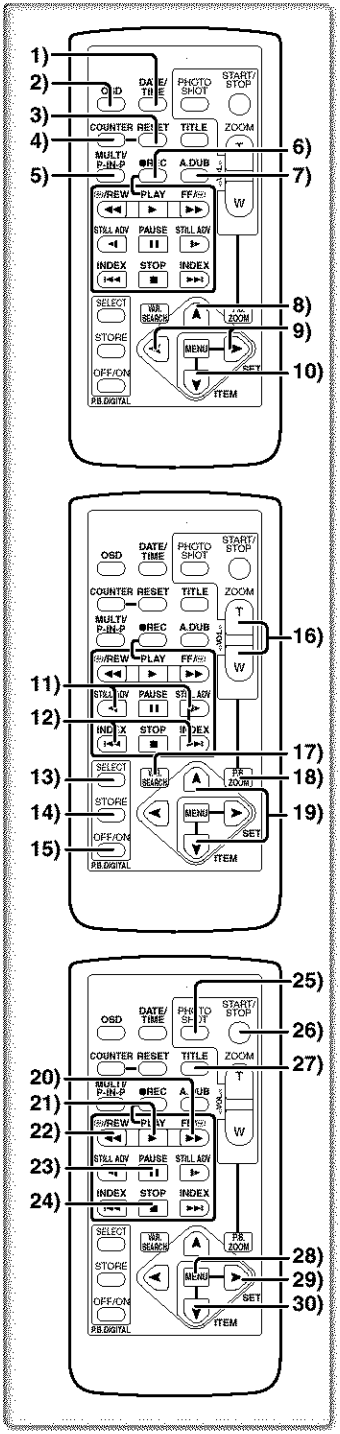

Remote Controller Buttons

1) **Date and Time Button [DATE/TIME] (➔ 84)**
2) **Indication Output Button [OSD] (➔ 50)**
3) **Counter Reset Button [RESET] (➔ 98)**
4) **Indication Shift Button [COUNTER] (➔ 84)**
5) **Multi-Picture/Picture-in-Picture Button [MULTI/P-IN-P] (➔ 41, 42, 49)**
6) **Recording Button [REC] (➔ 67, 68)**
7) **Audio Dubbing Button [A.DUB] (➔ 51)**
8) **Upward Direction Button [▲] (for Playback Zoom Function) (➔ 46)**
9) **Left/Right Direction Button [◀, ▶] (for Playback Zoom Function) (➔ 46)**
10) **Downward Direction Button [▼] (for Playback Zoom Function) (➔ 46)**
11) **Slow Motion/Still Advance Button [◀I, I▶] (◀I : reverse direction, I▶: normal direction) (➔ 45)**
12) **Index Search Button [I◀◀, ▶▶I] (I◀◀ : reverse direction, ▶▶I : normal direction) (➔ 47)**
13) **Selection Button [SELECT] (➔ 48)**
14) **Store Button [STORE] (➔ 48)**
15) **Off/On Button [OFF/ON] (➔ 48)**
16) **Zoom/Volume Button [ZOOM/VOL] (➔ 31, 43, 46)**
17) **Variable Speed Search Button [VAR.SEARCH] (➔ 44)**
18) **Playback Zoom Button [P.B. ZOOM] (➔ 46)**
19) **Speed Selection Button [▲, ▼] (for Variable Speed Search Function) (➔ 44)**

The following buttons function in the same manner as the corresponding buttons on the Palmcorder.

20) **Fast-forward/Cue Button [▶▶] (➔ 44)**
21) **Play Button [▶] (➔ 43, 57)**
22) **Rewind/Review Button [◀◀] (➔ 43, 44)**
23) **Pause Button [❚❚] (➔ 45, 57)**
24) **Stop Button [■] (➔ 43, 57)**
25) **PhotoShot Button [PHOTO SHOT] (➔ 30, 53)**
26) **Recording Start/Stop Button [START/STOP] (➔ 28)**
27) **Title Button [TITLE] (➔ 63)**
28) **Menu Button [MENU] (➔ 22)**
29) **Item Set Button [SET] (➔ 22)**
30) **Item Select Button [ITEM] (➔ 22)**

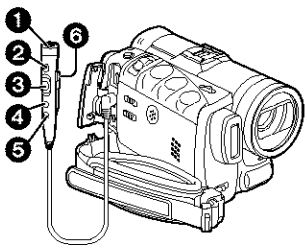

MagicWire Remote Control with Narration Mic

This controller allows the scene to be shot in various angles, high to low and is also convenient when a Tripod is used. When the MagicWire Remote Control with Narration Mic is not in use, attach its clip to the Easy-Grip Strap for convenience.

This controller allows the camera to be used more conveniently by a left-handed user.

- When using the MagicWire Remote Control with Narration MIC, plug its connector into the [REMOTE], [MIC] Jack of the Palmcorder as far as it goes.

❶ Narration Microphone [MIC] (➔ 29)

❷ Recording Start/Stop Button [REC]

❸ Zoom Lever [W/T]

- Zoom speed changes in 2 stages.

❹ PhotoShot Button [PHOTO SHOT]

❺ Narration Microphone Button [TALK] (➔ 29)

- When connecting the MagicWire Remote Control with Narration Mic to [REMOTE] Jack and the [TALK] Button is pressed, the built-in microphone does not operate.

❻ Clip

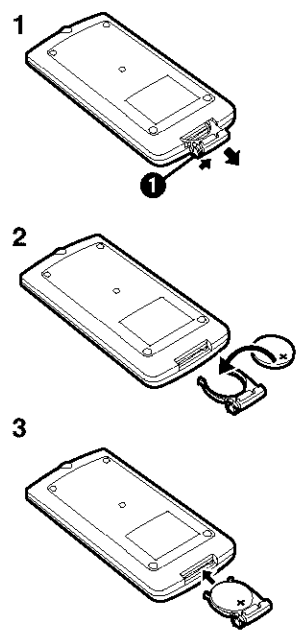

Inserting the Button-type Battery

Before using the Remote Controller, insert the supplied button-type battery.

1 While pressing the Stopper ❶, pull out the Battery Holder.

2 Insert the button-type battery with the imprint (+) facing upward.

3 Insert the Battery Holder into the Remote Controller.

- When the button-type battery becomes weak, replace it with a new CR2025 battery. (A battery is normally expected to last about one year, however, it depends on operation frequency.)
- Be sure to match the poles properly when inserting the battery.

Warning

Danger of explosion if battery is incorrectly replaced. Replace only with the same or equivalent type recommended by the equipment manufacturer. Discard used batteries according to manufacturer's instructions.
Risk of fire, explosion and burns. Do not recharge, disassemble, heat above 212°F (100°C) or incinerate. Keep the Button-Type battery out of the reach of children. Never put Button-Type battery in mouth. If swallowed, call your doctor.

Replace battery with Panasonic PART NO. CR2025 only. Use of another battery may present a risk of fire or explosion.
Caution: Battery may explode if mistreated.
Dispose of used battery promptly. Keep away from children.
Do not recharge, disassemble or dispose of in fire.

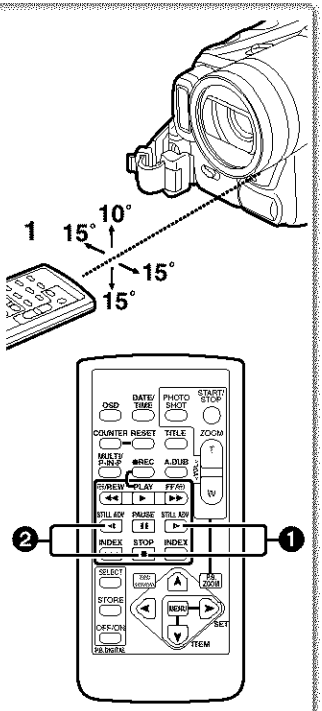

■Using the Remote Controller

1 Direct the Remote Controller at the Remote Control Sensor on the Palmcorder and press the desired button.

- Distance from the Palmcorder: Within approximately 15 feet (5 meters)
- Angle: Within approximately 10° in the upward, and 15° in the downward and horizontal directions from the central axis

- The above operating ranges are for indoor use. Outdoors, or under strong light, the equipment may not operate properly even within the above ranges.
- Within 3 feet (1 meter) range, you can also use the Remote Controller on the side (the LCD Monitor side) of the Palmcorder.

Selecting Remote Controller Modes

When 2 Palmcorders are used simultaneously, they can be operated individually by selecting different Remote Controller Modes.

- If the Remote Controller Mode on the Palmcorder and Remote Controller do not match, [REMOTE] is displayed.

Setting on the Palmcorder:

Set [REMOTE] on the [OTHER FUNCTIONS] Sub-Menu to the desired Remote Controller Mode.

Setting on the Remote Controller:

[VCR1]: Press the [▶] Button and [■] Button simultaneously. ❶
[VCR2]: Press the [◀] Button and [■] Button simultaneously. ❷

- When the battery in the Remote Controller is replaced, the Mode is automatically reset to [VCR1] Mode.

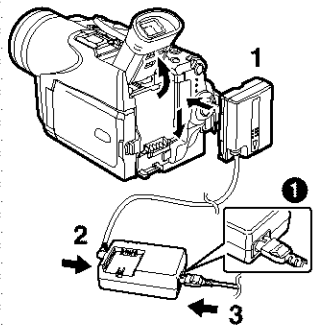

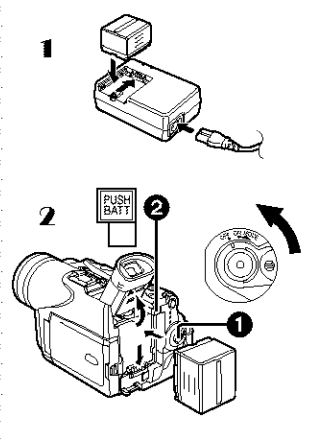

CGA-DU14	Ⓐ	2 h 45 min.
	Ⓑ	2 h 50 min. (2 h 10 min.)
CGA-DU21	Ⓐ	3 h 55 min.
	Ⓑ	4 h 15 min. (3 h 15 min.)
CGA-DU07	Ⓐ	1 h 30 min.
	Ⓑ	1 h 25 min. (1 h 5 min.)

Power Supply

■Using the AC Adaptor

1 Insert the battery-shaped connector of the DC Cable into the Battery Holder on the Palmcorder.

2 Connect the DC Cable to the [DC OUT] Jack on the AC Adaptor.

3 Connect the AC Adaptor and AC Cable.

- The AC Cable's outlet plug cannot be pushed fully into the AC Adaptor Jack. A gap will remain as shown ❶.
- **Before connecting or disconnecting the power supply, set the [OFF/ON/MODE] Switch on the Palmcorder to [OFF] and make sure that [CAMERA/VCR/CARD PB] Lamps are not lit.**
- Battery cannot be charged if DC Cable is connected to AC Adaptor.

■Using the Battery

Before use, fully charge the battery.

1 Attach the Battery to AC Adaptor and charge it.

- Since the Battery will not be charged when the DC Cable is connected to the AC Adaptor, disconnect it.
- The [POWER] Lamp and [CHARGE] Lamp lights up, and charging starts.
- When the [CHARGE] Lamp goes off, charging is completed.

2 Attach the charged Battery to the Palmcorder.

Disconnecting the Power Source

Set the [OFF/ON/MODE] Switch ❶ to [OFF], and while pressing the [PUSH BATT] Button ❷, slide the Battery or battery-shaped connector upward to disconnect it.

- **When attaching or removing battery, set [OFF/ON/MODE] Switch to [OFF] and make sure the Operation Mode Lamp is not lit.**
- When the Palmcorder is used for a long period of time, the Camera body becomes warm, but this is not a malfunction.
- If the [CHARGE] Lamp does not light up, although the Battery is attached to the AC Adaptor, detach the Battery and reattach it.

Charging Time and Available Recording Time

Ⓐ Charging Time

Ⓑ Maximum Continuous Recording Time

- "2 h 45 min." indicates 2 hours and 45 minutes.
- Battery CGA-DU14 is supplied.
- The hours shown in the table are approximate hours.
- The numeric characters in parentheses indicate the recording time when the LCD monitor is used. In actual use, the available recording time may be shorter in some cases.
- The hours shown in the table are for continuous recording at a temperature of 68°F (20°C) and humidity of 60%. If the Battery is charged at a higher or lower temperature, the charging time may be longer.
- We recommend the Battery Pack CGA-DU14 and CGA-DU21 for long time recording (2 hours or more continuous recording, 1 hour or more for intermittent recording).

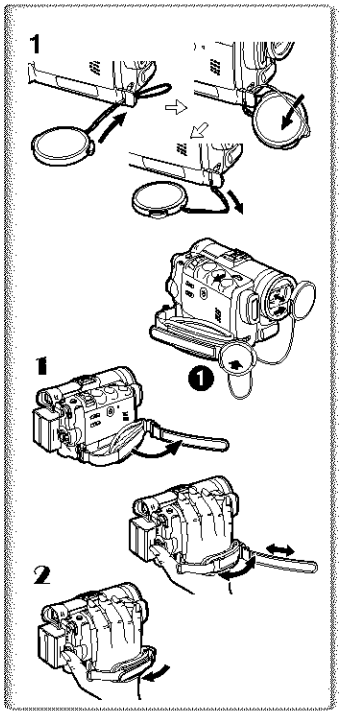

Lens Cap and Easy-Grip Strap

■Attach the Lens Cap

To protect the Lens surface, attach the Lens Cap.

1 Pass the end of the Lens Cap Cord through the hole in the Easy-Grip Strap Attachment part and the Lens Cap through the Lens Cap Cord.

- The removed Lens Cap can be hooked onto the Easy-Grip Strap ❶. (When you are not recording, be sure to keep the Lens Cap attached to the Lens for protection.)

■Adjust the Easy-Grip Strap

Adjust the length of the Easy-Grip Strap to the size of your hand.

1 Detach the tip of the Easy-Grip Strap and adjust the length of it.

2 Reattach the tip of the Easy-Grip Strap.

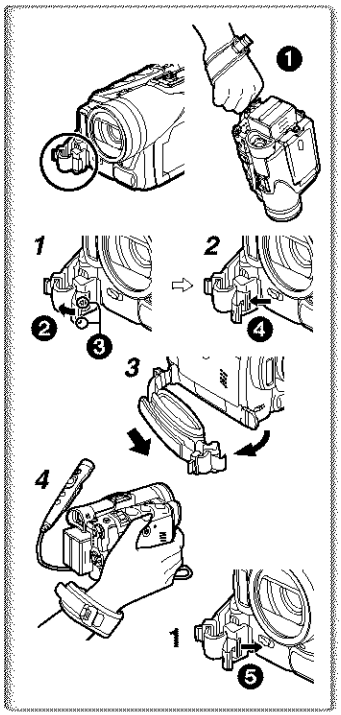

■To Use as a Free Style Easy-Grip Strap

Using the Easy-Grip Strap as the Free Style Easy-Grip Strap makes it easier to handle and carry the Palmcorder. ❶ It is also convenient when used in combination with the MagicWire Remote Control with Narration Mic.

1 Open the Lock Cover ❷ by holding tabs ❸ on both sides.

2 Keep pressing on the Lock Button ❹ and pull it off.

- Hold the Palmcorder securely.
- Close the Lock Cover ❷ after pulling off.

3 Slide the pad of the Easy-Grip Strap.

4 Attach the Easy-Grip Strap around your wrist.

When re-attaching the Grip Belt Attachment to the Palmcorder

1 Push until it locks with a click.

- To prevent from getting unlocked accidentally, press on ❺ and mount securely.

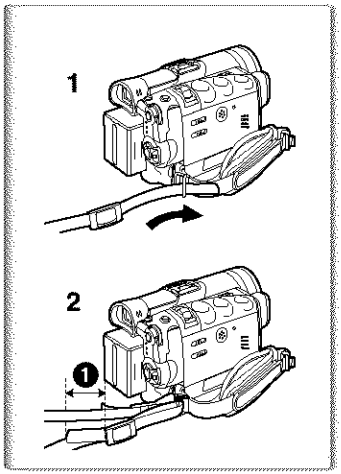

Attaching the Shoulder Strap

We recommend that you attach the Shoulder Strap before going outdoors to record so as to avoid dropping the Palmcorder.

1 Pass the tip of the Shoulder Strap through the Shoulder Strap Holders on the Palmcorder and pull the Shoulder Strap.

2 Fold the tips of the Shoulder Strap, pass it through the Shoulder Strap Length Adjuster, and pull it.

- Pull it out more than 1 inch (2 cm) ❶ from the Shoulder Strap Length Adjuster so that it cannot slip off.
- Please perform this step on the other side as well.

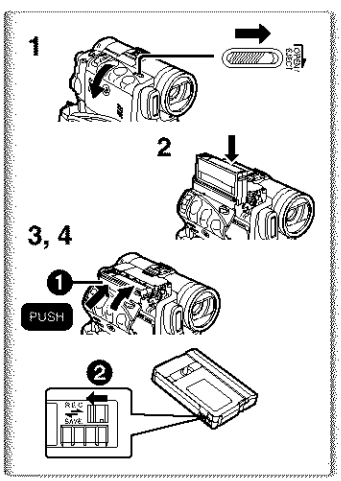

Inserting a Cassette

1 Slide the [OPEN/EJECT] Lever toward the front and pull down to open the Cassette Compartment Cover.

2 Insert a Cassette.

3 Close the Cassette Holder by pressing the [PUSH] mark ❶.

4 Close the Cassette Compartment Cover.

- For other notes, see page 85.

■Accidental Erasure Prevention

Opening the accidental erasure prevention slider ❷ on the cassette (by sliding it in the [SAVE] arrow direction) prevents recording. To enable recording, close the accidental erasure protection slider (by sliding it in the [REC] arrow direction.)

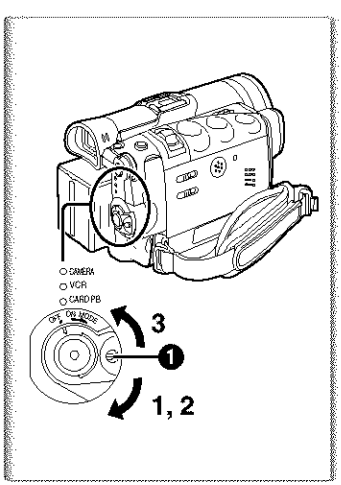

Turning on/off the Palmcorder and Selecting Modes

Turn on the power first and then select Modes.

■How to Turn on the Power

1 Set the [OFF/ON/MODE] Switch to [ON] while pressing the ❶ Button.

- The [CAMERA] Lamp lights up.

■How to Switch Modes

2 Rotate the [OFF/ON/MODE] Switch.

- With each rotation, the Mode switches in the order of Camera Mode, VCR Mode, and Card Playback Mode.
- The appropriate Mode Lamp lights up.

■How to Turn off the Power

3 Set the [OFF/ON/MODE] Switch to [OFF] while pressing the ❶ Button.

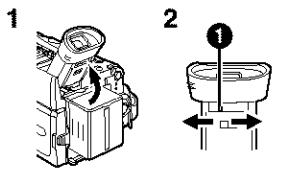

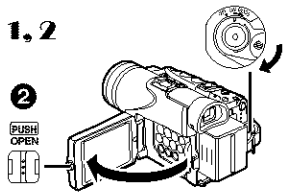

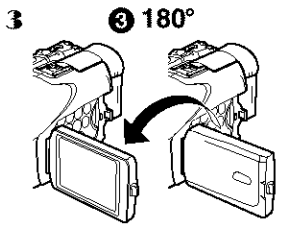

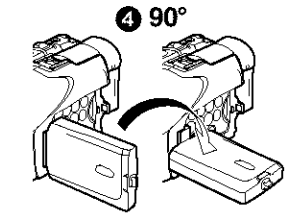

Using the Viewfinder

Before using the Viewfinder, adjust the field of view so that the displays inside the Viewfinder become clear and easy to read.

1 Tilt up the Viewfinder.

- The Viewfinder can also be pulled out for use.
- Do not pull on the Eyecup to extend the Viewfinder.

2 Adjust the Viewfinder by sliding the Eyepiece Corrector Knob ❶.

Using the LCD Monitor

With the LCD Monitor open, you can also record the picture while watching it.

1 Set the [OFF/ON/MODE] Switch to [ON].

2 Press the [PUSH OPEN] Button ❷ and, at the same time, bring out the LCD Monitor about 90° in the direction of the arrow.

- The Viewfinder goes off.

3 Adjust the LCD Monitor angle according to the desired recording angle.

- The LCD Monitor can rotate a maximum of 180° ❸ from the vertical position to the upward direction and a maximum of 90° ❹ to the downward direction. Forcefully rotating the LCD monitor beyond these ranges will damage the Palmcorder.

Closing the LCD monitor

Push the LCD Monitor until it is securely locked.

- Make sure the Card Slot Cover is closed.

■Adjusting Brightness and Color Level

When [LCD/EVF SET] on the [DISPLAY SETUP] Sub-menu is set to [YES], the following items are displayed:

LCD Brightness [LCD BRIGHTNESS]

Adjusts the brightness of the image on the LCD screen.

LCD Color Level [LCD COLOR LEVEL]

Adjusts the color saturation of the image on the LCD screen.

Brightness of the Viewfinder [EVF BRIGHTNESS]

Adjust the brightness of the image in the Viewfinder.

1 Press the [PUSH] Dial and select the item you want to adjust.

2 Rotate the [PUSH] Dial and increase or decrease the number of the vertical bars on the Bar Indication.

- The Bar Indication has 8 steps. A larger number of vertical bars indicates stronger brightness or color saturation.

Increasing the Brightness of the Entire LCD Monitor

Set the [LCD MODE] on the [DISPLAY SETUP] Sub-Menu to [BRIGHT].

To change the Picture Quality of the LCD Monitor

Set the [LCD AI] on the [DISPLAY SETUP] Sub-Menu to [ON] or [OFF].

[ON]: The screen image becomes clear and vivid. (The effect varies according to the recording scene.)

- These adjustments do not affect the recorded images.

- For other notes, see page 96.

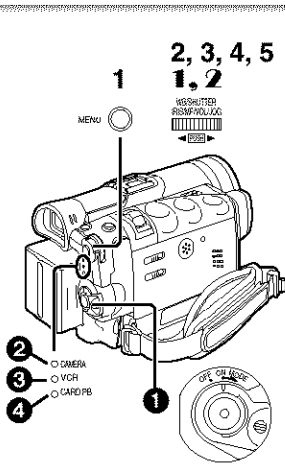

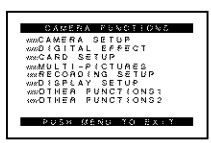

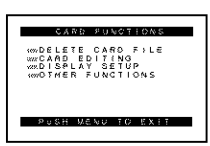

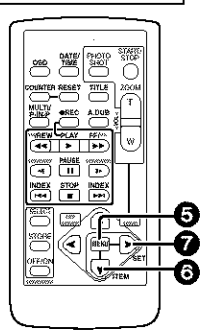

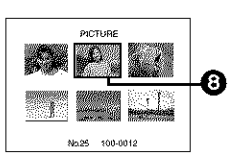

Using the Menu Screen

To facilitate the selection of a desired function or setting, this Palmcorder displays various function settings on menus.

1 Press the [MENU] Button.

- The Menu corresponding to the Mode selected by using the [OFF/ON/MODE] Switch ❶ is displayed.
- When the [CAMERA] Lamp is on, the Camera Function Menu is displayed. ❷
- When the [VCR] Lamp is on, the VCR Function Menu is displayed. ❸
- When the [CARD PB] Lamp is on, the Card Function Menu is displayed. ❹

2 Rotate the [PUSH] Dial to select a desired Sub-Menu.

3 Press the [PUSH] Dial to display the selected Sub-Menu.

4 Rotate the [PUSH] Dial to select the item to be set.

5 Press the [PUSH] Dial to set the selected item to a desired Mode.

- With each press of the [PUSH] Dial, the cursor [▶] brings up a subsequent Mode. Menu items that cannot be used in combination with the selected menu items are displayed in dark blue.

- While a Menu is displayed, you cannot begin to record or play back. Menus can be displayed during playback but not during recording.
- The above operations can be carried out using the Remote Controller. **(➔ 15)**
  - **To display the Menu, press the [MENU] Button ❺ on the Remote Controller.**
  - **To select items on the Menu, press the [ITEM] Button ❻ on the Remote Controller.**
  - **To set the mode for the selected items, press the [SET] Button ❼ on the Remote Controller.**

To Exit the Menu Screen

Press the [MENU] Button again.

About the Menu Mode Setting

The setting selected on the Menu will be retained even when the Palmcorder is turned off. (But, the setup of [EFFECT2] **(➔ 40)** will not be retained.) If, however, the Battery or AC Adaptor is disconnected before turning the Palmcorder off, the selected setting may not be retained.

- Menu operation flow is shown in this text by >>.

■File Selection in the Card Playback Mode (➔ 59)

A File Selection Operation may be necessary during Menu Operations. In this case, carry out the following procedure.

1 Turn the [PUSH] Dial and select a file.

- The selected file is marked by a frame ❽.

2 Press the [PUSH] Dial to confirm the selection of the file.

- After the above File Selection Procedure, carry out the various Menu Operations. (The above procedure will not be repeated in the following instructions.)

List of Menus

The illustrations of the Menus are for explanation purposes only, and they are different from the actual Menus.

Camera Mode Main-Menu [CAMERA FUNCTIONS]

[CAMERA SETUP] Sub-Menu

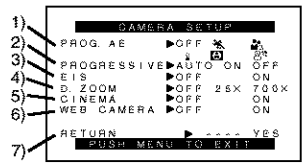

1) Auto Exposure Mode [PROG.AE] **(➔ 35)**
2) Progressive PhotoShot Mode [PROGRESSIVE] **(➔ 30)**
3) Image Stabilizer [EIS] **(➔ 33)**
4) Digital Zoom [D.ZOOM] **(➔ 32)**
5) Cinema-like Format Recording [CINEMA] **(➔ 33)**
6) Web Camera Mode [WEB CAMERA] **(➔ 72)**
7) Returning to the Main-Menu [RETURN]

[DIGITAL EFFECT] Sub-Menu

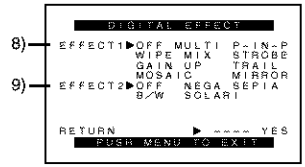

8) Digital Effects 1 [EFFECT1] **(➔ 40)**
9) Digital Effects 2 [EFFECT2] **(➔ 40)**

[CARD SETUP] Sub-Menu

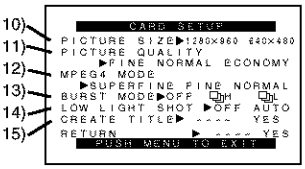

10) Picture Size [PICTURE SIZE] **(➔ 53)**
11) Picture Quality [PICTURE QUALITY] **(➔ 53)**
12) MPEG4 Picture Quality [MPEG4 MODE] **(➔ 56)**
13) RapidFire Consecutive Photoshot [BURST MODE] **(➔ 54)**
14) Low Light Recording [LOW LIGHT SHOT] **(➔ 53)**
15) Title Creation [CREATE TITLE] **(➔ 62)**

[MULTI-PICTURES] Sub-Menu

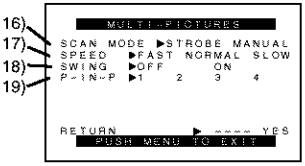

16) Multi-Picture Mode [SCAN MODE] **(➔ 42)**
17) Strobe Multi-Picture Speed [SPEED] **(➔ 42)**
18) Swing Mode [SWING] **(➔ 42)**
19) Position of Small Picture inside Normal Picture [P-IN-P] **(➔ 41)**

[RECORDING SETUP] Sub-Menu

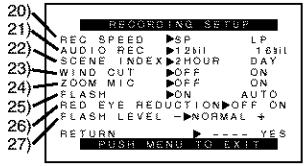

20) Recording Speed Mode [REC SPEED] **(➔ 27)**
21) Audio Recording Mode [AUDIO REC] **(➔ 27, 51)**
22) Index Mode [SCENE INDEX] **(➔ 47)**
23) Wind Noise Reduction [WIND CUT] **(➔ 35)**
- If this function is set to [ON], the sound of wind hitting the microphone can be reduced for recording.

24) Zoom Microphone [ZOOM MIC] **(➔ 31)**
25) Flash [FLASH] **(➔ 39)**
26) Red Eye Reduction [RED EYE REDUCTION] **(➔ 39)**
27) Flash Level [FLASH LEVEL] **(➔ 39)**

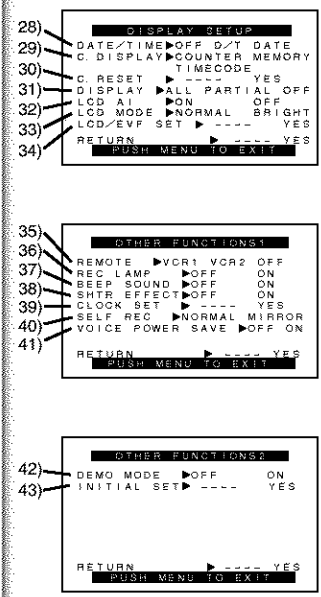

[DISPLAY SETUP] Sub-Menu

28) Date and Time Indication [DATE/TIME] (➔ 84)
29) Counter Display Mode [C.DISPLAY] (➔ 84)
30) Counter Reset [C.RESET] (➔ 98)
- Set the counter value to zero. However, it cannot reset the Time Code.

31) Display Mode [DISPLAY] (➔ 84)
32) LCD Artificial Intelligence [LCD AI] (➔ 21)
33) LCD Brightness [LCD MODE] (➔ 21)
34) LCD and Viewfinder Adjustment [LCD/EVF SET] (➔ 21)

[OTHER FUNCTIONS1] Sub-Menu

35) Remote Controller Mode [REMOTE] (➔ 17)
36) Recording Lamp [REC LAMP] (➔ 28)
37) Beep Sound [BEEP SOUND] (➔ 85)
38) Shutter Effect [SHTR EFFECT] (➔ 30)
39) Date and Time Setting [CLOCK SET] (➔ 27)
40) Self-Recording [SELF REC] (➔ 29)
41) Voice Power Save [VOICE POWER SAVE] (➔ 92)

[OTHER FUNCTIONS2] Sub-Menu

42) Demonstration Mode [DEMO MODE]
- If no operation takes place for approximately 10 minutes after the AC Adaptor was connected to the Palmcorder and the [OFF/ON/MODE] Switch was turned to [ON] without inserting a Cassette or a Card, the Palmcorder is automatically set to Demonstration Mode for introducing its functions. If any button is pressed or operated, the Demonstration Mode is cancelled. The Demonstration Mode can be started by setting [DEMO MODE] to [ON] and by exiting the Menu. To terminate the Demonstration Mode, insert a Cassette or set the [DEMO MODE] to [OFF].

43) Initial Setting Mode [INITIAL SET] (➔ 84)

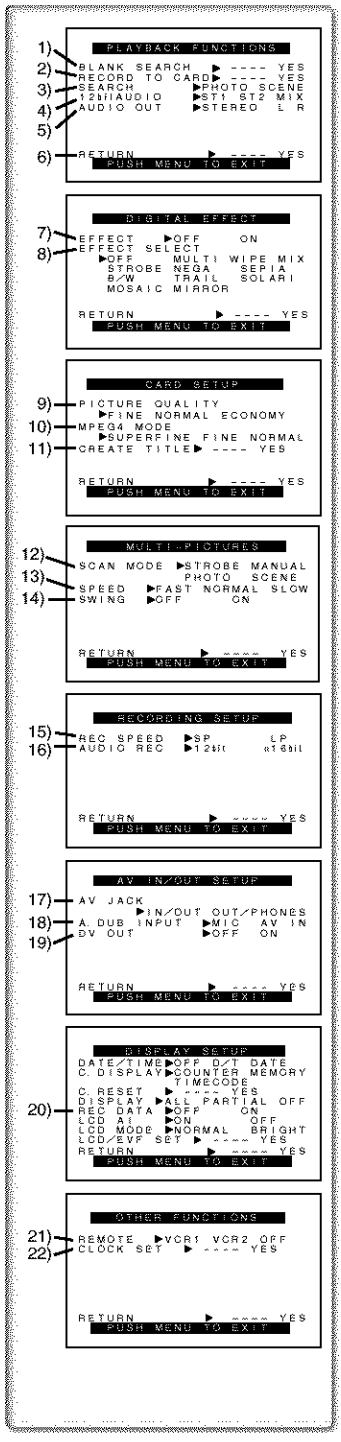

VCR Mode Main-Menu [VCR FUNCTIONS]

[PLAYBACK FUNCTIONS] Sub-Menu

1) Blank Search [BLANK SEARCH] **(➔ 46)**
2) Recording to Card [RECORD TO CARD] **(➔ 55)**
3) Index Search Mode [SEARCH] **(➔ 47)**
4) Audio Selector [12bit AUDIO] **(➔ 51)**
5) Audio Output Mode [AUDIO OUT] **(➔ 89)**
6) Returning to the Main-Menu [RETURN]

[DIGITAL EFFECT] Sub-Menu

7) Digital Effect On/Off [EFFECT] **(➔ 48)**
8) Digital Effect Selection [EFFECT SELECT] **(➔ 49)**

[CARD SETUP] Sub-Menu

9) Picture Quality [PICTURE QUALITY] **(➔ 54)**
10) MPEG4 Picture Quality [MPEG4 MODE] **(➔ 56)**
11) Title Creation [CREATE TITLE] **(➔ 62)**

[MULTI-PICTURES] Sub-Menu

12) Multi-Picture Mode [SCAN MODE] **(➔ 49)**
13) Strobe Multi-Picture Speed [SPEED] **(➔ 49)**
14) Swing Mode [SWING] **(➔ 49)**

[RECORDING SETUP] Sub-Menu

15) Recording Speed Mode [REC SPEED] **(➔ 27)**
16) Audio Recording Mode [AUDIO REC] **(➔ 27, 51)**

[AV IN/OUT SETUP] Sub-Menu

17) AV Jack [AV JACK] **(➔ 51, 67, 89)**
18) Audio Dubbing Input [A.DUB INPUT] **(➔ 51)**
19) AD Conversion Output [DV OUT] **(➔ 68)**

[DISPLAY SETUP] Sub-Menu

20) Camera Data [REC DATA]
- If you set [REC DATA] to [ON], the settings (shutter speed **(➔ 36)**, iris **(➔ 36)** and white balance settings **(➔ 37)**, etc.) used during the recordings are displayed during playback. [---] appears on the display when there is no data.
- The settings information may not be displayed properly if the camera data of this Palmcorder are played back on other equipment.

The camera data will not be recorded in the following cases:

- When the data are recorded from a card to a tape.
- When recording proceeds with no input signals supplied.
- When recording involves the use of the S-Video or AV Input Jack.
- When pictures with no camera data are recorded using the DV Terminal.
- When displaying a list of titles.

All of the other items on the [DISPLAY SETUP] Sub-Menu are the same as those on the [DISPLAY SETUP] Sub-Menu of the [CAMERA FUNCTIONS] Main-Menu.

[OTHER FUNCTIONS] Sub-Menu

21) Remote Controller Mode [REMOTE] **(➔ 17)**
22) Date and Time Setting [CLOCK SET] **(➔ 27)**

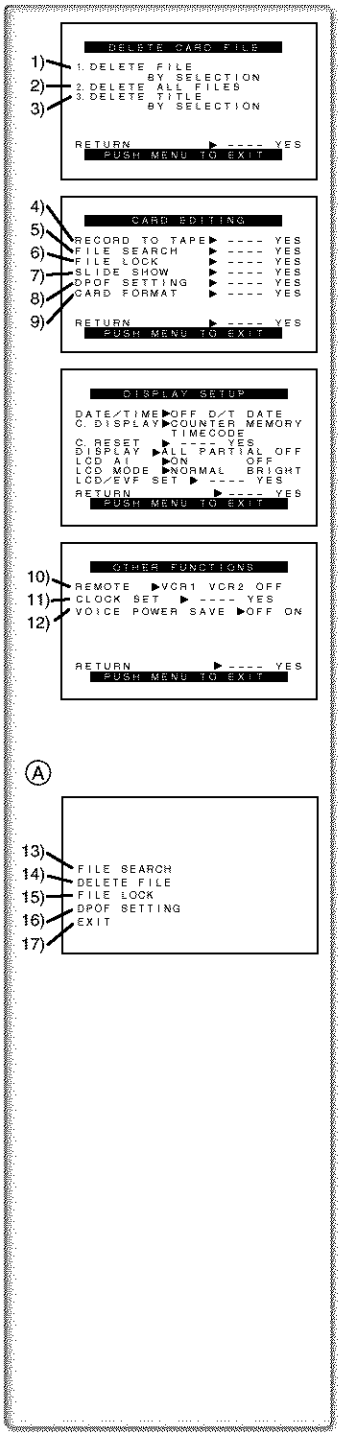

Card Playback Mode Main-Menu [CARD FUNCTIONS]

[DELETE CARD FILE] Sub-Menu

1) Selecting and deleting a File [DELETE FILE BY SELECTION] **(➔ 65)**
2) Deleting All Files [DELETE ALL FILES] **(➔ 65)**
3) Selecting and Deleting a Title [DELETE TITLE BY SELECTION] **(➔ 65)**

[CARD EDITING] Sub-Menu

4) Recording to Cassette [RECORD TO TAPE] **(➔ 60)**
5) Searching a File [FILE SEARCH] **(➔ 59)**
6) Setting the Lock [FILE LOCK] **(➔ 64)**
7) Setting a Slide Show [SLIDE SHOW] **(➔ 61)**
8) Setting DPOF [DPOF SETTING] **(➔ 66)**
9) Formatting a Card [CARD FORMAT] **(➔ 66)**

[DISPLAY SETUP] Sub-Menu

- Same as described on page 24.

[OTHER FUNCTIONS] Sub-Menu

10) Remote Controller Mode [REMOTE] **(➔ 17)**
11) Date and Time Setting [CLOCK SET] **(➔ 27)**
12) Voice Power Save [VOICE POWER SAVE] **(➔ 92)**

Short-Cut Menus of the Card Playback Mode Ⓐ

If you use the Short-Cut Menu, the Card Playback Mode Menu can be called up quickly. Press the [PUSH] Dial to display the Short-Cut Menu, and turn the [PUSH] Dial to select the desired Menu.

13) [FILE SEARCH]:
The [FILE SEARCH] Menu for finding files by number appears. **(➔ 59)**
14) [DELETE FILE]:
The [DELETE FILE] Menu for deleting the file being displayed appears. **(➔ 65)** Use this Menu after the file to be erased appears.
15) [FILE LOCK]:
The [FILE LOCK] Menu to prevent the accidental erasure of files (Lock Setting) being displayed appears. **(➔ 64)** Use this Menu after the file to be locked appears.
16) [DPOF SETTING]:
The [DPOF SETTING] Menu for performing the DPOF settings for the displayed picture appears. **(➔ 66)** Use this Menu after the picture whose DPOF settings are to be performed has appeared.
17) [EXIT]:
For terminating the Short-Cut Menu.

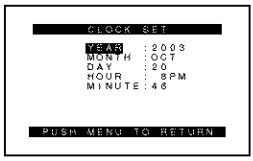

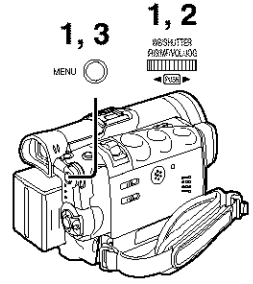

Setting Date and Time

1 Press the [MENU] Button and rotate the [PUSH] Dial to select [OTHER FUNCTIONS1] >> [CLOCK SET] >> [YES].
Or set [VCR FUNCTIONS] or [CARD FUNCTIONS] >> [OTHER FUNCTIONS] >> [CLOCK SET] >> [YES].

2 Rotate and press the [PUSH] Dial to select [YEAR]/ [MONTH]/[DAY]/[HOUR]/[MINUTE] and set it to a desired value.
- Year will cycle in the order shown below.
  2000→ 2001→ ...→ 2089→ 2000→ ...

3 Press the [MENU] Button to finish setting the date and time.
- The clock operation starts from [00] seconds.
- The menu will disappear when the [MENU] Button is pressed again.

- It is possible that the built-in clock in the Palmcorder may become inaccurate. Please check the time before recording. If the [⏲] Indication is flashing, charge the built-in lithium battery and reset the date and time.

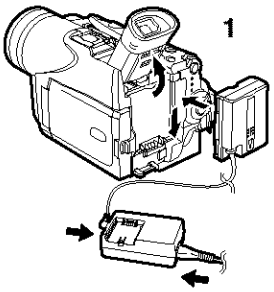

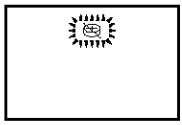

Internal Lithium Battery Recharge

The internal lithium battery sustains the operation of the clock. When the [⏲] Indication ❶ is lit, the internal lithium battery is almost or already discharged.

1 Connect the AC Adaptor to the Palmcorder with the power turned off and then connect to the AC Jack.
- After charging for 4 hours, the built-in lithium battery can power the clock for approximately 3 months.

LP Mode

A desired recording speed can be selected with [REC SPEED] on the [RECORDING SETUP] Sub-Menu. ❶

If LP Mode is selected, the recording time becomes 1.5 times longer than that of SP Mode.

Although the image quality does not decrease with the LP Mode recording, mosaic-like noise patterns may appear on a playback image, or some normal functions may be restricted.
- The contents that are recorded in LP Mode are not completely compatible with other equipment.
- Audio Dubbing is not possible with LP Mode. **(→ 51)**

Audio Recording Mode

The sound quality of the recorded sound can be selected with [AUDIO REC] on the [RECORDING SETUP] Sub-Menu. ❷
High sound-quality recording is possible with "16bit 48kHz 2 track" Mode. With the "12bit 32kHz 4 track" Mode, the original sound can be recorded on 2 tracks in stereo, while the other 2 tracks can be used for re-recording.

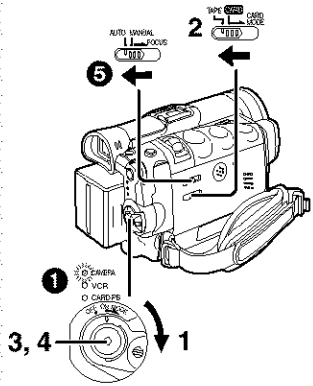

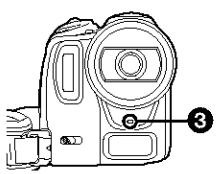

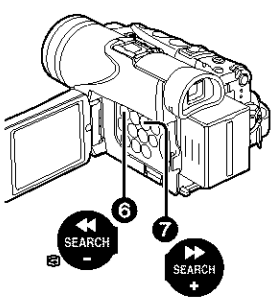

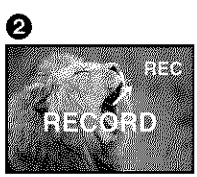

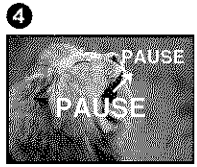

CAMERA Mode

Recording

1 Set the [OFF/ON/MODE] Switch to [ON].

- The [CAMERA] Lamp lights up. ❶

2 Slide the [TAPE/CARD/CARD MODE] Selector towards [TAPE].

3 Press the Recording Start/Stop Button.

- Recording starts.
- After the [RECORD] indicator is displayed, it changes to [REC]. ❷
- The Rec Lamp (LED Lamp) ❸ lights up during recording and alerts those being recorded that recording is in progress. The Rec Lamp does not light up if the [REC LAMP] on the [OTHER FUNCTIONS1] Sub-menu is set to [OFF].

4 Press the Recording Start/Stop Button again to pause the recording.

- [PAUSE] is displayed. ❹
- If the Recording Pause Mode continues for more than 5 minutes, the power is turned off automatically for tape protection and power conservation. To resume recording from this condition, turn on the power again.

- When recording while the Mode Selector Switch is set to [AUTO] ❺, the Palmcorder automatically adjusts the focus and white balance. (In some cases, they cannot be adjusted automatically and need to be adjusted manually.) **(➔ 37)**
- **Before turning on the power, remove the Lens Cap. If the Lens Cap is still attached when the power is turned on, Automatic White Balance Adjustment may not function correctly. (➔ 37)**

■To Check the Recording

By pressing the [⟲] Button ❻ in the Recording Pause Mode, you can play back the last few seconds of the recorded scene.

- [CHK] is displayed. After checking, the Palmcorder resumes the Recording Pause Mode.
- For other notes, see page 85.

■To View the recorded scene while the Recording is paused (Camera Search)

The recorded scene can be viewed by holding down the [SEARCH−] Button ❻ or [SEARCH+] Button ❼ in the Recording Pause Mode.

The Camera Search Function is useful for finding the starting point of a new scene to create a smooth transition from one scene to another.

- When the [SEARCH−] Button is pressed, images are played back in the reverse direction.
- When the [SEARCH+] Button is pressed, images are played back in the forward direction.
- For other notes, see page 86.

■To Finish the Recording

Set the [OFF/ON/MODE] Switch to [OFF].

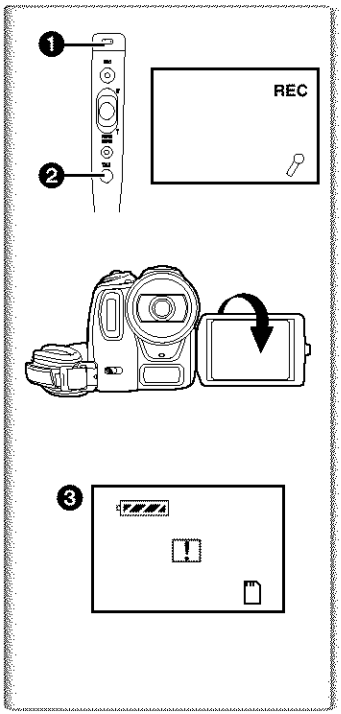

To add Sound while Recording

With the supplied MagicWire Remote Control with Narration Mic connected to the [REMOTE] Jack, you can add a narration while recording is in progress.

While the [TALK] Button ❷ is pressed, the [🎤] Indication is displayed and the sound is recorded from [MIC] ❶.

- While the [TALK] Button is pressed, the built-in microphone does not operate.
- We recommend to keep the distance of approximately 4 inches (10 cm) between the [MIC] and the mouth when recording.

Self-Recording

By opening the LCD Monitor and turning it so that it faces forward (to the lens side), you can let the subject in front of the Palmcorder monitor the shot while shooting is in progress.

- When the LCD Monitor is opened, the Viewfinder is disabled automatically. However, when the LCD Monitor is rotated forward, the image is also shown in the Viewfinder.
- If you prefer to have the image on the LCD Monitor to look like an image in a mirror, set [SELF REC] on the [OTHER FUNCTIONS1] Sub-Menu to [MIRROR]. (Mirror Mode) Images are recorded normally and no left and right reversal occurs.
- If [MIRROR] is used during self-recording, only the basic indications, such as the Recording Indication [⏺] (Red) or [●], Recording Pause Indication [⏸] (Cyan) or [●❚❚] and Remaining Battery Power Indication [▰▰▰], are displayed. ❸
- If a general Warning/Alarm Indication [⚠] appears, return the LCD Monitor to the original position in order to check the specific content of the Warning/Alarm Indication.

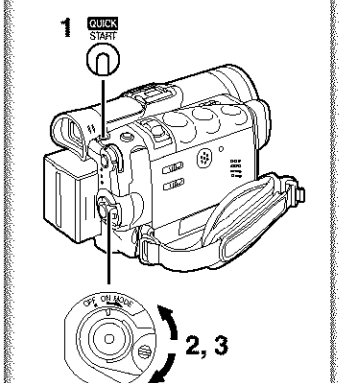

Quick Start

When this feature is activated, you can resume recording quickly even if the Palmcorder goes into standby mode (when left in Pause mode for 5 minutes with the Quick Start Recording Lamp on). Palmcorder will be ready for shooting in approximately 1.7 seconds when the Power switch is turned [OFF] and back to [ON] again. To activate this feature, press the [QUICK START] Button to turn on the Quick Start Lamp.

1 Press the [QUICK START] Button.
- The Quick Start Recording Lamp lights up.

2 Set the [OFF/ON/MODE] Selector to [OFF].
- The Quick Start Recording Lamp remains lit.

3 Set the [OFF/ON/MODE] Selector to [ON].
- The Palmcorder will be ready for recording in approximately 1.7 seconds.

To Cancel the Quick Start

Keep the [QUICK START] Button pressed for approximately 2 seconds and make sure the Quick Start Recording Lamp is not lit.

- For other notes, see page 86.

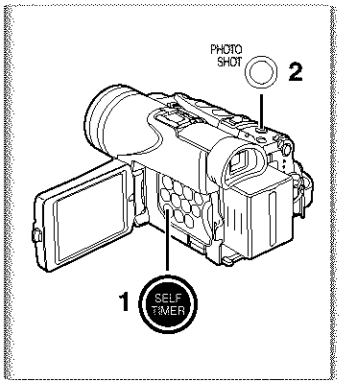

Self-timer Recording

When you set the self-timer, the still pictures are automatically taken after 10 seconds, on the Cassette and the Memory Card.

1 Press the [SELF TIMER] Button.

- The [⏲] Indication appears.

2 Press the [PHOTO SHOT] Button.

- The Recording Lamp and the [⏲] Indication flash and the Photoshot is activated after 10 seconds.

- You can also use the RapidFire Consecutive Photoshot. **(➔ 54)**
- For other notes, see page 86.

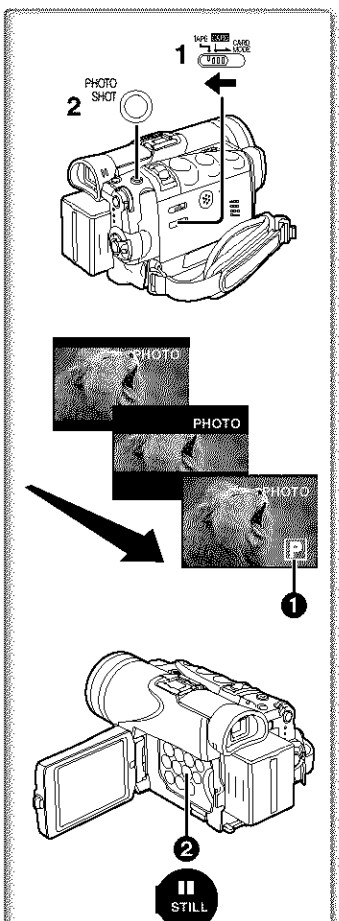

PhotoShot Recording on the DV Cassette

With this function, you can record still pictures with sound for approximately 7 seconds each on the Cassette.

1 Slide the [TAPE/CARD/CARD MODE] Selector to [TAPE].

2 Press the [PHOTO SHOT] Button in the Recording Pause Mode.

- The Palmcorder records a still picture for about 7 seconds and then switches back to the Recording Pause Mode.

- PhotoShot Recording results in slightly inferior image quality.
- If you set [SHTR EFFECT] on the [OTHER FUNCTIONS1] Sub-Menu to [ON], you can add an image and a sound like releasing the shutter.

■Progressive PhotoShot™ Mode

With the Progressive PhotoShot™ Mode, you can record still pictures with higher resolution than with the normal PhotoShot Function.

- After setting [PROGRESSIVE] on the [CAMERA SETUP] Sub-menu to [ON] or [AUTO], press the [PHOTO SHOT] Button in the Recording Pause Mode. [P] is displayed. ❶
- This Function may not work with some function settings. **(➔ 86)**
- If you select Card Mode, [PROGRESSIVE] is set to [ON].

■Continuous PhotoShot

If the [PHOTO SHOT] Button is held down with the [SHTR EFFECT] of the Sub-Menu [OTHER FUNCTIONS1] set to [ON], the Palmcorder will record still images without interruptions every 0.7 seconds until the button is released.

- The screen blinks and, at the same time, a shutter clicking sound is recorded. (This function, however, is not enabled when Progressive PhotoShot™ is set to [ON] or [AUTO].)

■Digital Still Picture

When the [STILL] Button ❷ is pressed, images become still pictures. When the Button is pressed again, the Digital Still Picture Mode is cancelled.

- We recommend that you press the [STILL] Button first at the position where you want to record the picture and then press the [PHOTO SHOT] Button.
- For other notes, see page 86.

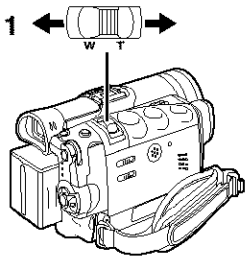

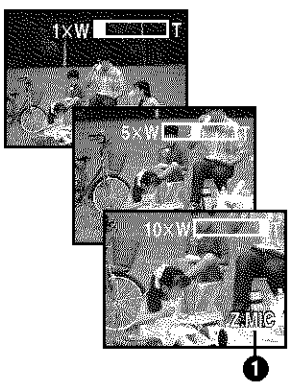

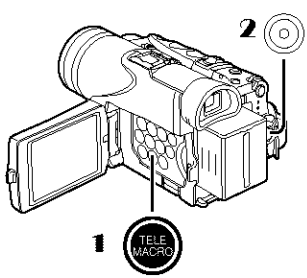

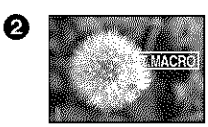

Zoom In/Out Functions

The Zoom Function can be used to record objects close by or to achieve a wide-angle shot.

1 For wide-angle shots (zoom out):
Press the [W/T] zoom lever towards [W].
For close-ups (zoom in):
Press the [W/T] zoom lever towards [T].

- Zoom magnification is displayed for a few seconds.
- Generally speaking, when the [W/T] zoom lever is pressed farther towards [W] or [T], the zooming speed gradually increases.

■Taking Close-up Shots of Small Subjects (Macro Close-up Function)

When the zoom magnification is 1×, the Palmcorder can focus on a subject that is as close as approximately 0.8 inches (2 cm) from the lens. With this feature, small subjects such as insects can be recorded.

■To Use the Tele-Macro Function

With the zoom magnification of 10×, the Palmcorder can bring the subject into focus as close as approximately 15.7 inches (40 cm) from the Lens. Focusing only on the subject and bringing the background off the focus make the picture more impressive.

1 Press the [TELE MACRO] Button.

- The zoom magnification is fixed to 10× and the focusing onto the subject becomes available up to approximately 15.7 inches (40 cm) close.
- The [T.MACRO] Indication ❷ appears.

2 Press the Recording Start/Stop Button.

To Cancel the Tele-Macro Function

Press the [TELE MACRO] Button.

■To Use the Zoom Microphone Function

Along with the zooming operation, the microphone's directional angle and sensitivity are varied for recording sounds.

- Set [CAMERA FUNCTIONS] >> [RECORDING SETUP] >> [ZOOM MIC] >> [ON]. (The [Z.MIC] Indication is displayed. ❶)
- The Zoom Microphone Function may not work effectively if the surrounding noise is too loud.
- When the [TAPE/CARD/CARD MODE] Selector is set to [CARD], the Zoom Microphone Function does not work.
- It does not work with an external microphone.

- For other notes, see page 86.

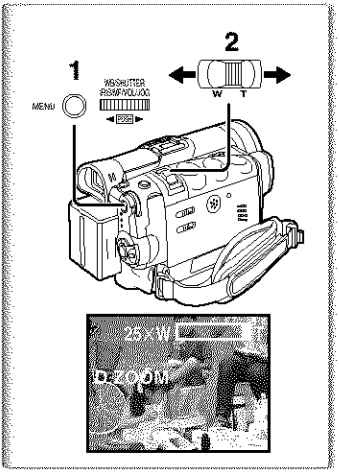

Digital Zoom Function

This function is useful when you want to record close-up shots of subjects located beyond a normal zoom range of 1× to 10× magnification. With the Digital Zoom Function, you can select a magnification of 25× or 700×.

1 Set [CAMERA FUNCTIONS] >> [CAMERA SETUP] >> [D.ZOOM] >> [25×] or [700×].

- 25×: Digital zooming to 25×
- 700×: Digital zooming to 700×

2 To zoom in or out, press the [W/T] zoom lever towards [T] or towards [W].

Canceling the Digital Zoom Function

Set [D.ZOOM] on the [CAMERA SETUP] Sub-menu to [OFF].

- As the magnification of digital zoom increases, the quality of image may deteriorate.
- White Balance Adjustment cannot be set in the digital zoom range.

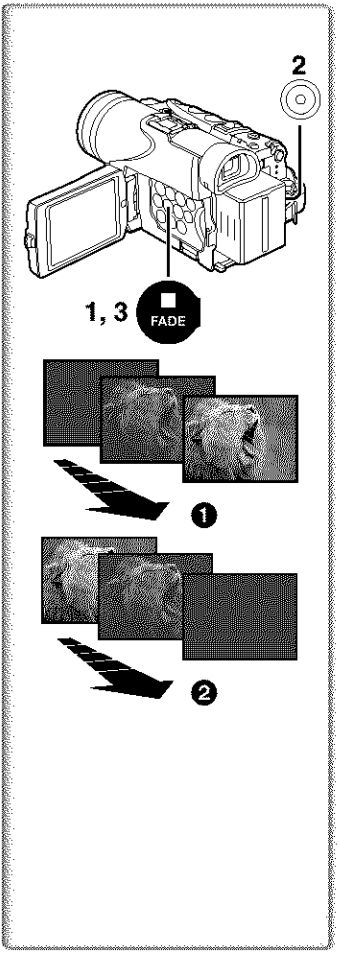

Fade In/Out Functions

Fade In ❶

Fade In brings out images and sounds gradually from a black screen at the beginning of a scene.

1 Hold down the [FADE] Button while the Palmcorder is set to the Recording Pause Mode.

- The image fades out gradually.

2 When the image is completely gone, press the Recording Start/Stop Button to start recording.

3 Release the [FADE] Button about 3 seconds after starting recording.

- The image reappears gradually.

Fade Out ❷

Fade Out causes images and sounds to disappear gradually, leaving a black screen at the end of a scene.

1 Hold down the [FADE] Button while recording.

- The image fades out gradually.

2 About 3 seconds after the image is completely gone, press the Recording Start/Stop Button to stop recording.

3 Release the [FADE] Button.

- Fading-in and fading-out cannot be used when recording still pictures in the PhotoShot Mode, Digital Still Picture Mode, Multi-Picture Mode, and for the small still picture in the Picture-in-Picture Mode.

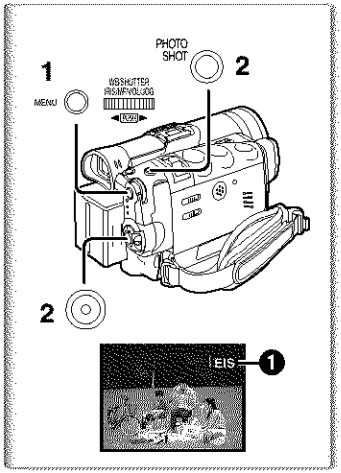

Digital Electronic Image Stabilizer Function

If you are recording in unstable situations and the Palmcorder is shaky, you can use this function to correct for camera shake in these images.

- If the Palmcorder shakes too much, this function may not be able to stabilize images being recorded.

1 Set [CAMERA FUNCTIONS] >> [CAMERA SETUP] >> [EIS] >> [ON].

- The [EIS] Indication ❶ appears.

2 Press the Recording Start/Stop Button or [PHOTO SHOT] Button to start recording.

Canceling Digital Electronic Image Stabilizer

Set [EIS] on the [CAMERA SETUP] Sub-Menu to [OFF].

- For other notes, see page 87.

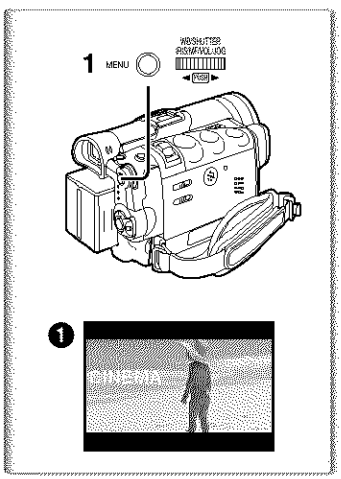

Cinema Function

This function is for recording in a cinema-like wide screen.

1 Set [CAMERA FUNCTIONS] >> [CAMERA SETUP] >> [CINEMA] >> [ON].

- Black bars appear at the top and bottom of the screen. ❶

To Cancel the Cinema Mode

Set [CAMERA FUNCTIONS] >> [CAMERA SETUP] >> [CINEMA] >> [OFF].

- For other notes, see page 87.

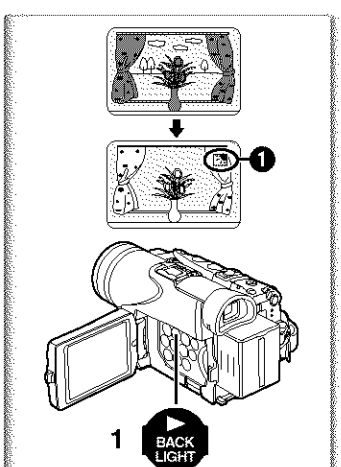

Backlight Compensation Function

This function prevents a subject from being recorded too dark in backlight. (Backlight is the light that shines from behind a recording subject.)

1 Press the [BACK LIGHT] Button.

- The [BACK LIGHT] Indication ❶ flashes and then is displayed.

To resume normal Recording

Press the Backlight Button [BACK LIGHT].

- When the [BACK LIGHT] Button is pressed, the entire screen becomes brighter.
- By operating the [OFF/ON/MODE] Switch, the Backlight Compensation Function is cancelled.
- This function cannot be used when the Iris is set.

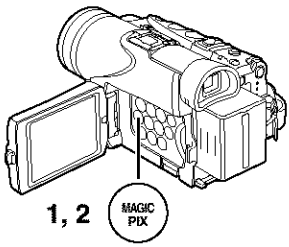

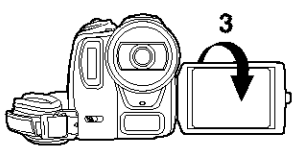

MagicPix Function

This function allows you to record color images brightly in a dark place without using a light.

1 Press the [MAGICPIX] Button until the [MAGICPIX] Indication ❶ appears.

0 Lux MagicPix Function

Using the LCD Monitor light, a dark scene of almost 0 lux can be recorded.

2 Press the [MAGICPIX] Button until the [0LUX MAGICPIX] Indication ❷ appears.

- The [REVERSE THE LCD MONITOR] Indication appears.

3 Rotate the LCD Monitor frontward (to the lens side).

- The screen becomes white and the Viewfinder turns on.
- The available range of the LCD Monitor light is within approximately 3 feet (1 metre).

To Cancel the MagicPix Function

Press the [MAGICPIX] Button repeatedly until neither the [MAGICPIX] Indication nor the [0LUX MAGICPIX] Indication appears.

- For other notes, see page 87.

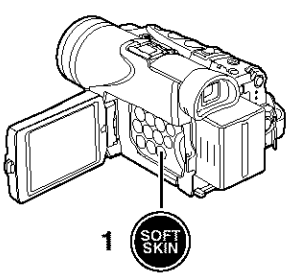

Soft Skin Function

This enables you to record skin colors in a softer tone. In order to get the best result, avoid background colors similar to the skin color of the subject, otherwise, the result will be a background lacking in detail.

1 Press the [SOFT SKIN] Button.

- The [SOFT SKIN] Indication ❶ appears.

- To obtain the best effect, we recommend shooting the subject from the chest up, so that the upper part from the chest of the subject can be framed in the screen.

To Cancel the Soft Skin Function

Press the [SOFT SKIN] Button.

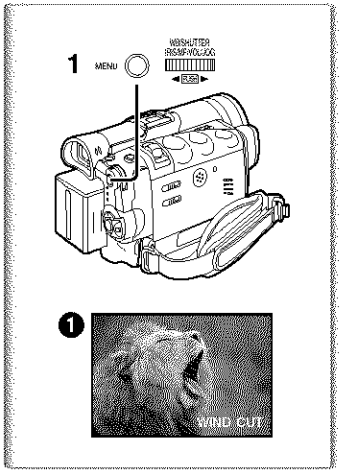

Wind Noise Reduction Function

This function reduces the noise that the wind makes as it hits the microphone during recording.

1 Set [CAMERA FUNCTIONS] >> [RECORDING SETUP] >> [WIND CUT] >> [ON].

- The [WIND CUT] Indication ❶ appears.

To Cancel the Wind Noise Reduction Function

Set [CAMERA FUNCTIONS] >> [RECORDING SETUP] >> [WIND CUT] >> [OFF].

- This function does not work with the microphone on the MagicWire Remote Control with Narration Mic nor an external microphone.
- When it is set to [ON], directivity of microphone is regulated depending on the strength of wind to reduce wind noise.

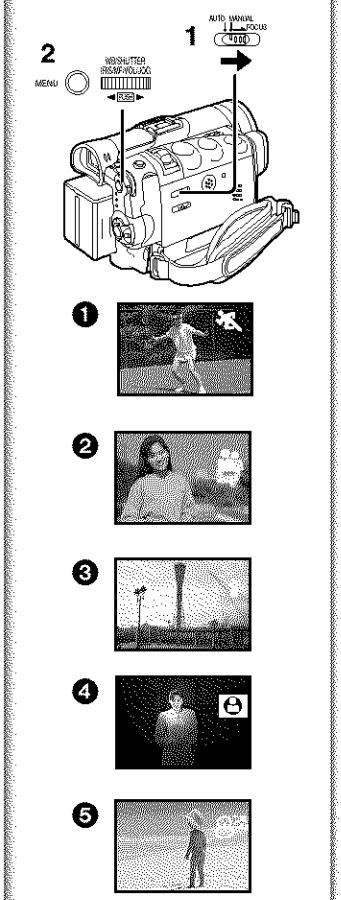

Recording in Special Situations (Program AE)

Select optimal automatic exposures under specific recording situations.

1 Set the Mode Selector Switch to [MANUAL].

- The [MNL] Indication appears.

2 Set [CAMERA FUNCTIONS] >> [CAMERA SETUP] >> [PROG.AE] >> a desired Mode [ ], [ ], [ ], [ ], [ ].

- The Indication of the selected Mode is displayed.

[ ] Sports Mode ❶

For recording scenes involving quick movements, such as sports scenes.

[ ] Portrait Mode ❷

Focuses on the main subject of the image and leaves the background slightly out of focus.

[ ] Low Light Mode ❸

Preserves the mood of dim light settings without altering picture brightness.

[ ] Spotlight Mode ❹

Neutralizes the additional brightness created by a spotlight.

[ ] Surf & Snow Mode ❺

Compensates for excessive illumination from sun glare to produce a clear picture.

Canceling the Program AE Function

Set [PROG.AE] on the [CAMERA SETUP] Sub-Menu to [OFF]. Or, set the Mode Selector Switch to [AUTO].

- For other notes, see page 87.

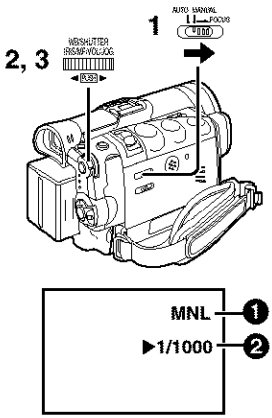

Manual Shutter Speed Adjustment

Useful for recording fast-moving subjects.

1 Set the Mode Selector Switch to [MANUAL].

- The [MNL] Indication ❶ appears.

2 Press the [PUSH] Dial repeatedly until the shutter speed Indication ❷ appears.

3 Rotate the [PUSH] Dial to adjust the shutter speed.

The Range of Shutter Speed Adjustment

Tape Mode 1/60--1/8000

Card Mode 1/30--1/500

The standard shutter speed is 1/60 second.

Selecting a speed closer to [1/8000] causes the shutter speed to be faster, resulting in crisper captures of moving subjects but a lower light level.

- When the progressive function is [ON], a speed only up to 1/500 can be used.

To Resume Automatic Adjustment

Set the Mode Selector Switch to [AUTO].

- For other notes, see page 88.

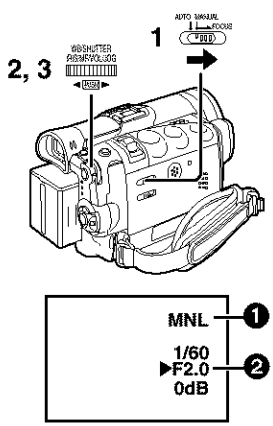

Manual Iris Adjustment (F Number)

You can use this function when the screen is too bright or too dark.

1 Set the Mode Selector Switch to [MANUAL].

- The [MNL] Indication ❶ appears.

2 Press the [PUSH] Dial repeatedly until the Iris Indication ❷ appears.

3 Rotate the [PUSH] Dial to adjust the iris.

Adjustable Range of the Iris

CLOSE (Closed), F16, ..., F2.0,

OPEN (Opened) 0dB, ..., 18dB

When a value closer to [CLOSE] is selected, the image becomes darker.

When a value closer to [18dB] is selected, the image becomes brighter.

The value to which dB is attached indicates a gain value. If this value is too large, the quality of the image deteriorates.

To Resume Automatic Adjustment

Set the Mode Selector Switch to [AUTO].

- For other notes, see page 88.

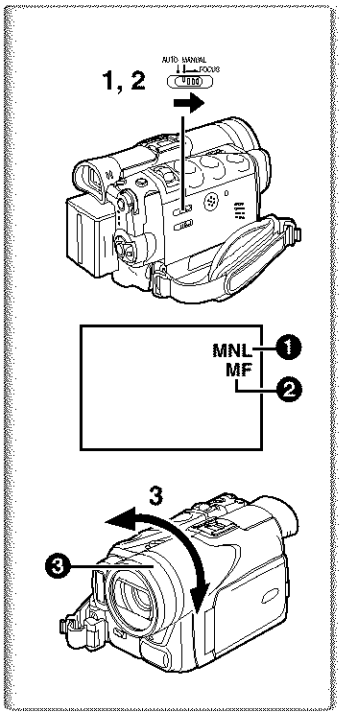

Manual Focus Adjustment

Focus can be adjusted manually for recording in a situation where auto focus may not function well.

1 Set the Mode Selector Switch to [MANUAL].

- The [MNL] Indication ❶ appears.

2 Set the Mode Selector Switch to [FOCUS].

- The [MF] Indication (Manual Focus Mode) ❷ appears.

3 Turn the Focus Ring ❸ to adjust the focus.

To Resume Automatic Adjustment

Set the Mode Selector Switch to [AUTO].

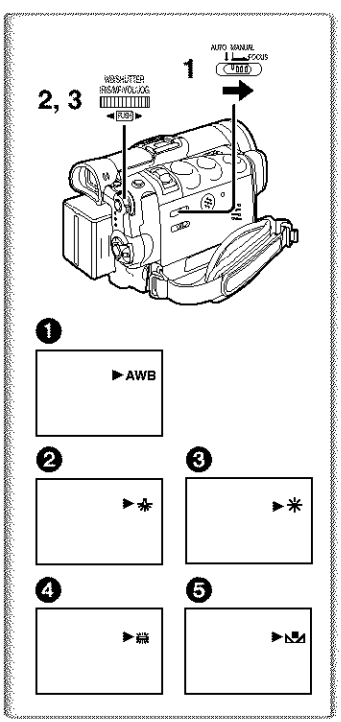

Recording in Natural Colors (White Balance)

Depending on the scene or light conditions, the Automatic White Balance Adjustment Mode may not be able to bring out natural colors. In such a case, the white balance can be adjusted manually.

1 Set the Mode Selector Switch to [MANUAL].

- The [MNL] Indication appears.

2 Press the [PUSH] Dial.

- The [AWB] Indication appears.

3 Rotate the [PUSH] Dial to set a desired White Balance Mode.

❶ Automatic White Balance Adjustment [AWB]
❷ Indoor Mode (shooting under incandescent lighting) [☆]
❸ Outdoor Mode [☀]
❹ Fluorescent light Mode [▦]
❺ The White Balance setting that was previously set manually [◪]

To Resume Automatic Adjustment

Rotate the [PUSH] Dial until the [AWB] Indication appears. Or, set the Mode Selector Switch to [AUTO].

- When power is turned on with the Lens Cap on, the Automatic White Balance Adjustment may not function properly. Please turn on the Palmcorder after removing the Lens Cap.

- For other notes, see page 88.

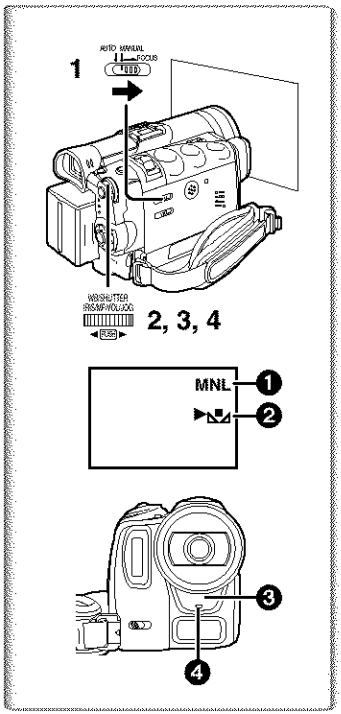

Adjusting White Balance Manually

When the Auto White Balance Adjustment function does not operate suitably under the existing light conditions, use the Manual White Balance Adjustment mode.

1 Set the Mode Selector Switch to [MANUAL].
- The [MNL] Indication ❶ appears.

2 Press the [PUSH] Dial.
- The [AWB] Indication appears.

3 Rotate the [PUSH] Dial until the [▪◿] Indication ❷ is displayed.

4 Point the Palmcorder at a full-screen white subject, and then keep the [PUSH] Dial pressed until indication [▪◿] stops flashing.
- When the [▪◿] Indication flashes after turning the Palmcorder on, the previously adjusted white balance setting is still kept.

To Resume Automatic Adjustment

Rotate the [PUSH] Dial until the [AWB] Indication appears. Or, set the Mode Selector Switch to [AUTO].

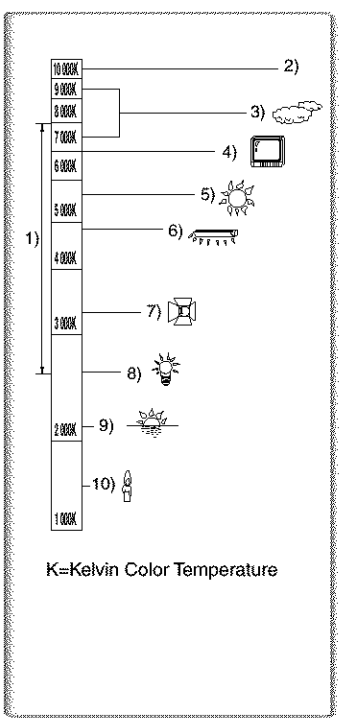

K=Kelvin Color Temperature

■About White Balance Sensor

The White Balance Sensor ❸ determines the nature of the light source during recording.
- Do not cover the White Balance Sensor with your hand during recording. Otherwise, White Balance will not work normally.
- The red light from the Recording Lamp ❹ will be reflected off your hand or object, possibly causing the White Balance sensor to operate incorrectly and changing the coloring.

Use of Auto White Balance Adjustment in inappropriate lighting conditions may result in reddish or bluish images. Where the subject is surrounded by many light-sources, Auto White Balance Adjustment may not operate properly. In such a case, we suggest that you adjust the White Balance.

1) The range that is controlled by the Auto White Balance Adjustment Mode of this Palmcorder
2) Blue sky
3) Cloudy sky (Rain)
4) TV screen
5) Sunlight
6) White fluorescent light
7) Halogen light bulb
8) Incandescent light bulb
9) Sunrise and sunset
10) Candlelight

- For other notes, see page 88.

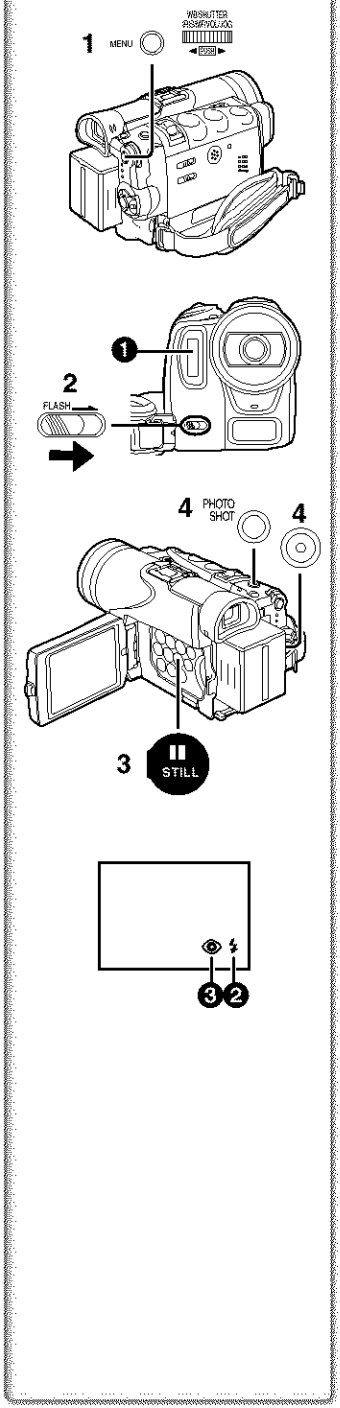

Using the Built-in Flash

The Built-in Flash enables you to record still pictures in a dark place. The Flash lights twice to detect the surrounding luminosity and to light properly.

1 Set [CAMERA FUNCTIONS] >> [RECORDING SETUP] >> [FLASH] >> [ON] or [AUTO].

- If [AUTO] is selected, the Flash can be lit if light is needed by sensing the surrounding luminosity.

2 Slide the [FLASH] Lever to open the Flash.

- The Flash ❶ pops up.

3 Press the [STILL] Button.

- Flash is lighted and the image becomes still.

4 Press the [PHOTO SHOT] Button or Recording Start/ Stop Button.

- Flash is not lighted when recording.

Adjusting Brightness of the Flash

Set [CAMERA FUNCTIONS] >> [RECORDING SETUP] >> [FLASH LEVEL] >> a desired Flash Level.

- For recording under normal conditions, set it to [NORMAL]. (The [ϟ] Indication ❷ appears.)
- If the brightness is not enough in [NORMAL] setting, set it to [+] (the [ϟ+] Indication appears), if it is too much, set it to [−] (the [ϟ−] Indication appears).

To reduce the "Red Eye" Effect

Set [CAMERA FUNCTIONS] >> [RECORDING SETUP] >> [RED EYE REDUCTION] >> [ON].

- The [◉] Indication ❸ appears.
- Even if the [RED EYE REDUCTION] is set to [ON], you still may get "red eyes phenomenon" depending on the recording condition.

- For other notes, see page 88.

1) MULTI

2) P-IN-P

3) WIPE

4) MIX

5) STROBE

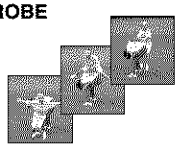

6) GAIN UP

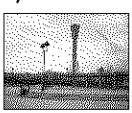

7) TRAIL

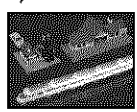

8) MOSAIC

9) MIRROR

10) NEGA

11) SEPIA

12) B/W

13) SOLARI

Digital Effect Functions

This Palmcorder is equipped with digital effect functions that add special effects to the scene.

Digital Effects 1 [EFFECT1]

1) [MULTI] Multi-Picture Mode
2) [P-IN-P] Picture-in-Picture Mode
3) [WIPE] Wipe Mode
4) [MIX] Mix Mode
5) [STROBE] Strobe Mode
   - Records images with a stroboscopic effect.
6) [GAIN UP] Gain up Mode
   - Brightens images electronically.
   - Adjust focus manually when using this Mode. **(➔ 37)**
7) [TRAIL] Trailing Effect Mode
   - Records images with a trailing effect.
8) [MOSAIC] Mosaic Mode
   - Produces a mosaic-like image.
9) [MIRROR] Mirror Mode
   - The right half of an image becomes a mirror image of the left half.

Digital Effects 2 [EFFECT2]

10) [NEGA] Negative Mode
    - The colors of the recorded image are inverted as seen in a negative.
11) [SEPIA] Sepia Mode
    - Records a scene with a brownish tint, like the color of old pictures.
12) [B/W] Black & White Mode
    - Records an image in black and white.
13) [SOLARI] Solarization Mode
    - Records an image with a painting-like effect.

Selecting a desired digital effect

Set [CAMERA FUNCTIONS] >> [DIGITAL EFFECT] >> [EFFECT1] or [EFFECT2] >> a desired digital effect.

Canceling the digital effect

Set [CAMERA FUNCTIONS] >> [DIGITAL EFFECT] >> [EFFECT1] or [EFFECT2] >> [OFF].

- If the Palmcorder is turned off, the [EFFECT2] settings are cancelled.

- For other notes, see page 89.

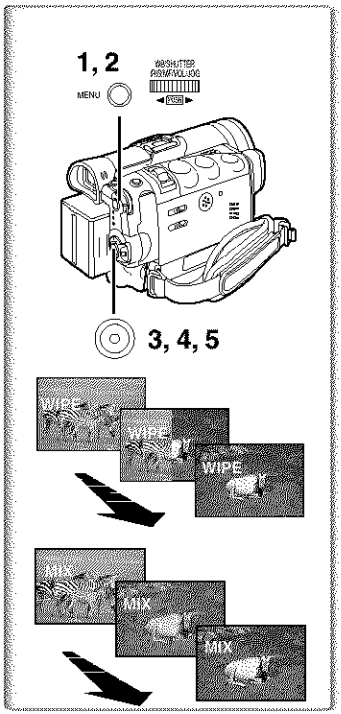

Wipe Mode and Mix Mode

Wipe Mode:

Like a curtain being pulled, the still picture of the last recorded scene gradually changes to the moving image of a new scene.

Mix Mode:

While the moving image of a new scene fades in, the still image of the last recorded scene gradually fades out.

1 Set [DIGITAL EFFECT] >> [EFFECT1] >> [WIPE] or [MIX].

2 Exit the menu by pressing the [MENU] Button.

- The [WIPE] or [MIX] Indication appears.

3 Press the Recording Start/Stop Button to start the Recording.

4 Press the Recording Start/Stop Button to pause the Recording.

- The last scene is stored in memory. The [WIPE] or [MIX] Indication changes to [WIPE] or [MIX].

5 Press the Recording Start/Stop Button to restart the Recording.

- The last image of the previous scene gradually changes to the new scene.

- For other notes, see page 89.

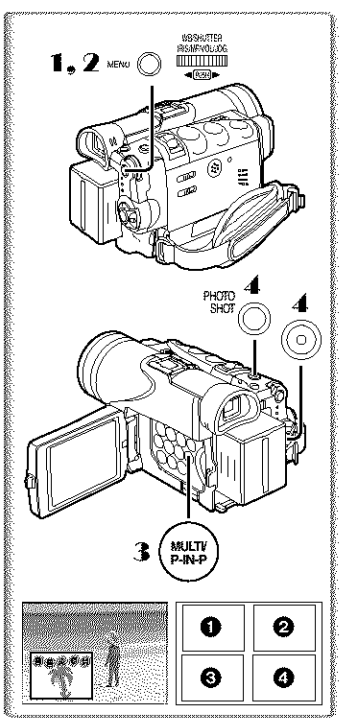

Picture-in-Picture Mode

You can display a sub-screen (still picture) inside the screen.

After setting [CAMERA FUNCTIONS] >> [DIGITAL EFFECT] >> [EFFECT1] >> [P-IN-P].....

1 Select [P-IN-P] on the [MULTI-PICTURES] Sub-Menu and set the position (❶❷❸❹) where you want to insert a small still picture.

2 Exit the menu by pressing the [MENU] Button.

3 Aim the Palmcorder at the scene you want to capture and press the [P-IN-P] Button to insert a small still picture.

- A small still picture is displayed in a Normal picture.
- If the [P-IN-P] Button is pressed again, the small still picture is cleared.

4 Press the Recording Start/Stop Button or the [PHOTO SHOT] Button to record on the Cassette.

- For other notes, see page 89.

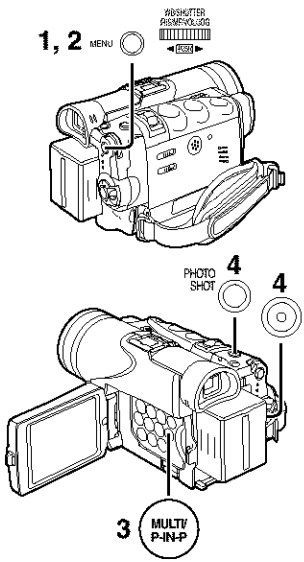

❶

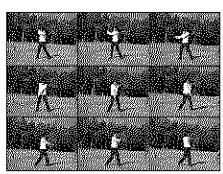

❷

■Multi-Picture Mode

Strobe Multi-Picture Mode ❶:
You can capture and record 9 consecutive small still pictures.
Manual Multi-Picture Mode ❷:
You can manually capture and record 9 small still pictures.

After setting [CAMERA FUNCTIONS] >> [DIGITAL EFFECT] >> [EFFECT1] >> [MULTI].....

1 Set [MULTI-PICTURES] >> [SCAN MODE] >> [STROBE] or [MANUAL].

When [STROBE] is selected:

- Set the [SPEED] to a desired strobe speed.
  - **[FAST]:** You can capture 9 consecutive still pictures within approximately 1 second
  - **[NORMAL]:** You can capture 9 consecutive still pictures within approximately 1.5 seconds
  - **[SLOW]:** You can capture 9 consecutive still pictures within approximately 2 seconds
- If you set [SWING] on the [MULTI-PICTURES] Sub-Menu to [ON], the intervals at which the 9 still pictures are taken are longer at the beginning and end than in the middle of the swing strobe period, and it is useful for analyzing swing motion, etc., in sports.

When [MANUAL] is selected:

- You can select a desired scene one at a time up to 9 small pictures.

2 Exit the menu by pressing the [MENU] Button.

3 Press the [MULTI] Button.

- If [MANUAL] is selected, press the [MULTI] Button at each scene you want to capture.

4 Press the Recording Start/Stop Button or the [PHOTO SHOT] Button to record on the Cassette.

Deleting all the captured Multi-Pictures

While 9 multi-pictures are displayed, press the [MULTI] Button.

- If [MANUAL] has been selected, press the [MULTI] Button after 9 pictures are displayed.

To Display the Multi-Pictures again

Press the [MULTI] Button for 1 second or longer.

To Delete Multi-Pictures one by one (When pictures were captured in [MANUAL])

When the [MULTI] Button is pressed for 1 second or longer while the still pictures are displayed, the picture captured last is deleted. If you keep pressing the [MULTI] Button, the pictures are deleted continuously.

- After still pictures are deleted, they cannot be displayed again.

- For other notes, see page 89.

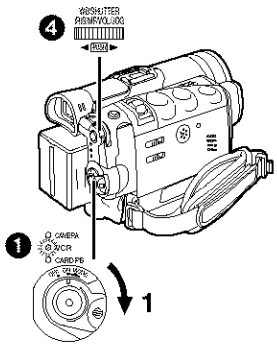

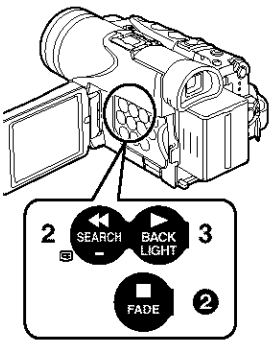

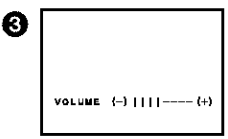

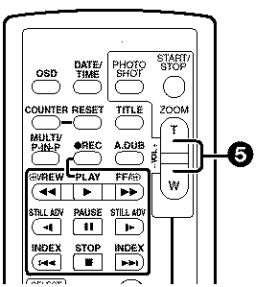

Playing Back

The recorded scene can be played back immediately after recording.

1 Rotate the [OFF/ON/MODE] Switch and set the Palmcorder in the VCR Mode.

- The [VCR] Lamp lights up. ❶

2 Press the [◀◀] Button to rewind the tape.

- Rewind the tape to the point where you want to start playback.
- When the tape reaches the beginning, rewinding stops automatically.

3 Press the [▶] Button to start playback.

To Stop Playback

Press the [■] Button ❷.

- If a cassette recorded with copyright protection signals is played back, the screen becomes blue or mosaic-like noise patterns appear.

■Adjusting the Sound Volume

Until the [VOLUME] Indication ❸ appears, keep pressing the [PUSH] Dial ❹. Then, rotate the [PUSH] Dial to adjust the volume. After the adjustment, press the [PUSH] Dial to make the [VOLUME] Indication disappear.

To adjust the volume with the Remote Controller, press the [T] or [W] Button ❺ to display the [VOLUME] Indication. Press the [T] Button to increase the volume or press the [W] Button to decrease the volume. The [VOLUME] Indication goes off 2 or 3 seconds after the adjustment is finished.

- When the Playback Zoom Function is in use, the sound volume cannot be adjusted.

- For other notes, see page 89.

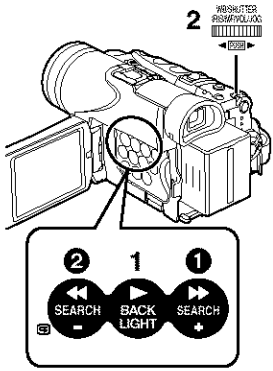

Ⓐ ▷▷

Ⓑ ◁◁

Ⓒ 1×▷

Ⓓ R▷

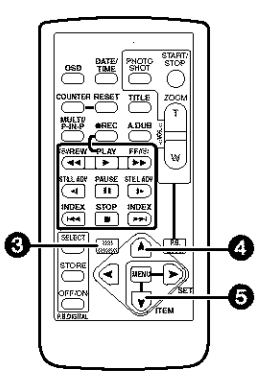

Finding a Scene You Want to Play Back

■Cue/Review Playback

Cue Playback Ⓐ

Press the [▶▶] Button ❶ during playback.

Review Playback Ⓑ

Press the [◀◀] Button ❷ during playback.

- If the Button is held continuously, it remains as Cue Playback or Review Playback until you release it.

■Hyper Check Function

If you press the [▶▶] Button during fast-forwarding of the tape or the [◀◀] Button during rewinding of the tape, Cue Playback or Review Playback continues for as long as the Button is held down.

■Variable Speed Search Function

The speed of Cue Playback or Review Playback can be varied.

1 During playback, press the [▶] Button.

- [1×▷] Indication appears. Ⓒ

2 Rotate the [PUSH] Dial and select a desired search speed.

The following 6 playback speeds are available for the Variable Speed Search Function in both the fast-forwarding and rewinding directions. 1/5× (slow playback, SP mode only), 1/3× (slow playback, LP mode only), 1×, 2×, 5×, 10×, and 20×.

- The same setting can be performed using the Remote Controller's [VAR.SEARCH] Button ❸, the [▲] Button ❹ and the [▼] Button ❺.

Resuming Normal Playback

Press the [▶] Button.

- During Cue or Review Playback, fast-moving images may show mosaic-like noise patterns. This is not a malfunction.
- The sound is muted during search.
- The Variable Speed Search feature is not available when the Repeat playback is active.

■Repeat Playback

If you hold down the [▶] Button for 5 seconds or longer, the Palmcorder switches to Repeat Playback Mode, and the [R ▷] Indication appears Ⓓ. (To cancel Repeat Playback Mode, set the [OFF/ON/MODE] Switch to [OFF].)

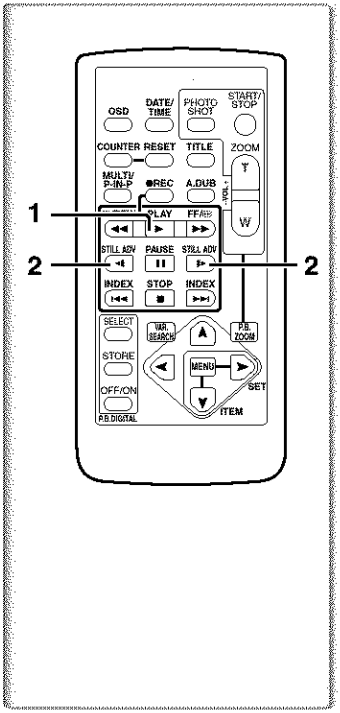

Slow Motion Playback

This Palmcorder can play back at a slow speed.

1 Press the [▶] Button.

2 Press the [◂I] Button or the [I▸] Button on the Remote Controller.

- When the [◂I] Button is pressed, Slow Motion Playback proceeds in the reverse direction, while pressing the [I▸] Button starts Slow Motion Playback in the forward direction.

Scenes recorded in the SP mode are played back at approximately 1/5th of the normal speed.

Scenes recorded in the LP mode are played back at approximately 1/3rd of the normal speed.

Resuming Normal Playback

Press the [▶] Button.

- If the Palmcorder is left in the Slow Motion Playback Mode for more than 12 minutes, the Palmcorder switches to the Stop Mode to protect the video heads from excessive wear and tear.

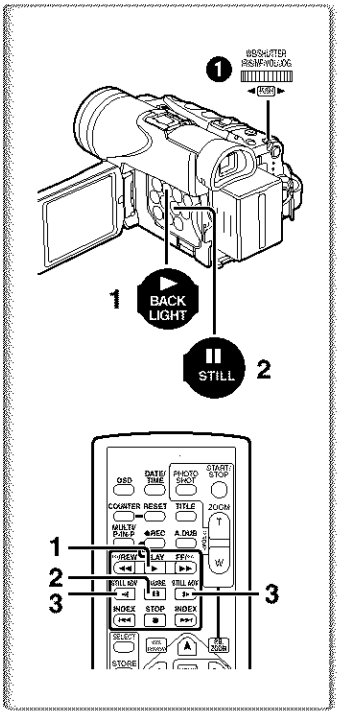

Still Playback/Still Advance Playback

This Palmcorder is capable of still picture playback and frame-advance playback.

1 Press the [▶] Button.

2 Press the [❚❚] Button.

- The playback image stops in the Still Playback Mode.

3 Press the [◂I] Button or the [I▸] Button on the Remote Controller.

- With each press of the [◂I] Button, still pictures advance in the reverse direction. With each pressing of the [I▸] Button, still pictures advance in the forward direction. If either one of the buttons is pressed continuously, still pictures advance continuously 1 frame at a time until the button is released.

Resuming Normal Playback

Press the [▶] Button or [❚❚] Button.

■Jog Playback

By rotating the Jog Dial ([PUSH] Dial) ❶ of the Palmcorder in the Still Playback Mode, still pictures can be advanced one frame at a time in the forward or reverse direction.

- If the Palmcorder is left in the Still Playback Mode for more than 5 minutes, the Palmcorder switches to the Stop Mode to protect the video heads from excessive wear and tear.

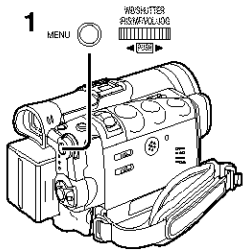

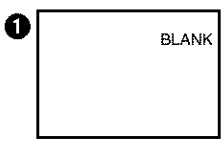

Finding the End of a Recording

(Blank Search Function)

The Blank Search Function helps you to locate the end of a recording on the Cassette quickly.

1 Set [VCR FUNCTIONS] >> [PLAYBACK FUNCTIONS] >> [BLANK SEARCH] >> [YES].

- The [BLANK] Indication ❶ appears.
- Approximately 1 second before the last recorded scene, the Palmcorder switches to the Still Playback Mode.
- If there is no blank portion left on the cassette, the Palmcorder stops at the end of the tape.

Canceling Blank Search prior to completion

Press the [■] Button.

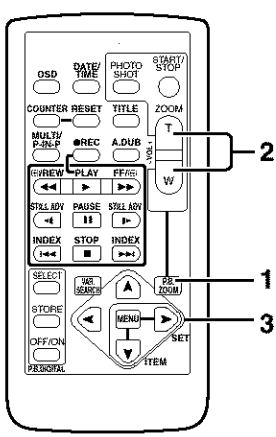

Playback Zoom Function

A part of the image can be enlarged up to 10 times during playback.

1 During playback, press the [P.B. ZOOM] Button on the Remote Controller.

- The center of the image is enlarged to approximately double the size.

Changing the Zoom Magnification

2 Change the magnification by pressing the [W] or [T] Button on the Remote Controller.

- You can increase the magnification up to 10×.

Changing the enlarged area of an image

3 Press the Arrow Button (▲, ◄, ►, ▼) on the Remote controller that points to the area you want to enlarge.

Canceling the Playback Zoom Function

Press the [P.B. ZOOM] Button on the Remote Controller.

- For other notes, see page 89.

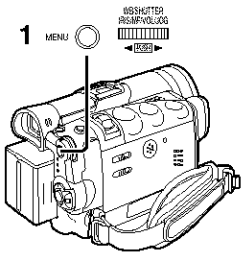

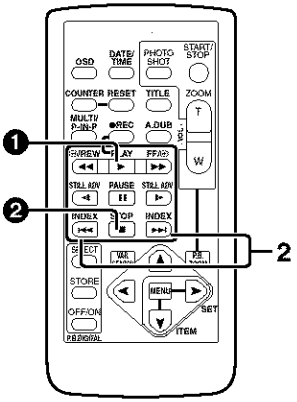

Ⓐ

INDEX

Ⓑ

S 1

Index Search Functions

To facilitate searching of desired scene, this Palmcorder automatically records index signals during recording, as explained in the following.

PhotoShot Index Signal

These signals are automatically recorded whenever still pictures are taken in PhotoShot Mode **(➔ 30)**.

When recording still pictures using the Continuous PhotoShot Mode **(➔ 30)**, the index signal is not recorded.

Scene Index Signal

Scene Index Signals are automatically recorded when you start recording after inserting a Cassette.

However, if the Palmcorder is switched from the VCR Mode to Camera Mode, or if the date and time is set before the start of recording, the index signal is not recorded.

- If [SCENE INDEX] of [RECORDING SETUP] Sub-Menu on the [CAMERA FUNCTIONS] Main-Menu is set to [2HOUR], an index signal is recorded when Recording is restarted after a lapse of 2 hours or longer. If it is set to [DAY], an index signal is recorded when recording is restarted after the date has changed since the last recording. (While the index signal is recorded, the [INDEX] indication Ⓐ flashes for a few seconds.)

■PhotoShot Index Search

1 Set [VCR FUNCTIONS] >> [PLAYBACK FUNCTIONS] >> [SEARCH] >> [PHOTO].

2 Press the [▶▶|] Button or the [|◀◀] Button on the Remote Controller.

- With each press of the corresponding button, still pictures recorded in PhotoShot Mode are searched.
- After pictures with sounds are played back for 4 seconds, the Palmcorder switches to the Still Playback Mode.

■Scene Index Search

1 Set [VCR FUNCTIONS] >> [PLAYBACK FUNCTIONS] >> [SEARCH] >> [SCENE].

2 Press the [▶▶|] Button or the [|◀◀] Button on the Remote Controller.

- When the corresponding button is pressed once, the [S 1] Indication Ⓑ appears, and searching of the subsequent scene marked with an index signal starts. Each time the button is pressed after the start of Scene Index Search, the indication changes from [S 2] to [S 9], and the beginning of the scene corresponding to the selected number will be searched. After reaching the desired scene, playback starts automatically.
- Up to 9 scene numbers can be selected.

Top Scan

If the [▶▶|] Button or the [|◀◀] Button is pressed for more than 2 seconds, the Palmcorder will scan for scenes (or PhotoShots) and play back the first few seconds of each. (To cancel, press the [▶] Button ❶ or the [■] Button ❷.)

- For other notes, see page 89.

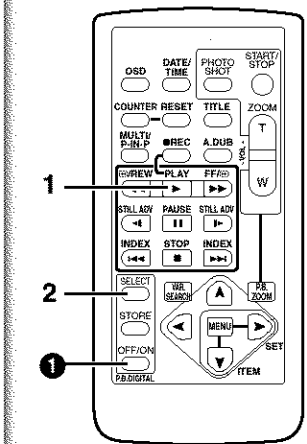

Playback Digital Effect Functions

During playback, special Digital Effects can be added to the Recording. The digital effects that may be applied in the process of recording (except Picture in Picture Mode) will be the same as these added effects.

1 Press the [▶] Button.

2 Press the [SELECT] Button on the Remote Controller and select desired Digital Effect.

- When the [SELECT] Button is pressed repeatedly, the Digital Effect selection changes.
  MULTI→WIPE→MIX→STROBE→NEGA→SEPIA→B/W →TRAIL→ SOLARI→MOSAIC→ MIRROR
- The same setting can also be set using the [DIGITAL EFFECT] on the [VCR FUNCTIONS] Main-Menu.

Suspending Playback Digital Effect Temporarily

Press the [OFF/ON] Button ❶ to suspend or restart the digital effect. When the digital effect is paused temporarily, the selected effect's indication flashes.

Canceling the Digital Effect

Press the [SELECT] Button on the Remote Controller repeatedly until the Digital Effect Indication is cleared.

- For other notes, see page 90.

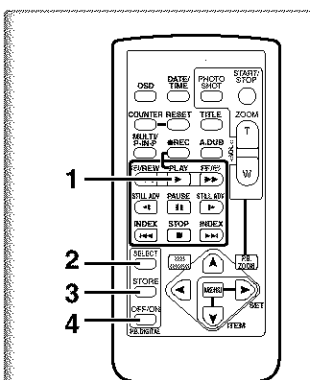

■Playback with Wipe Mode and Mix Mode

1 Press the [▶] Button to start playback.

2 Press the [SELECT] Button on the Remote Controller and select [WIPE] or [MIX].

3 Press the [STORE] Button for the moment you want to save as a still picture.

- The [WIPE] or [MIX] Indication changes to [WIPE] or [MIX] and the image is saved.

4 Press the [OFF/ON] Button in the scene in which you want to use the Wipe or Mix effect.

- The scene changes as a result of the Wipe or Mix effect.

- The Wipe Function and Mix Function can be used only from the Remote Controller during playback.
- If the [OFF/ON] Button is pressed while Wipe Function or Mix Function is used, the effect will stop temporarily at that point. Pressing the [OFF/ON] Button again will bring back the effect.

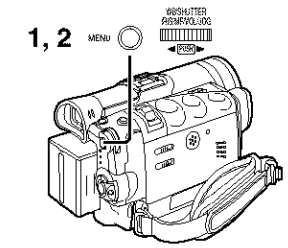

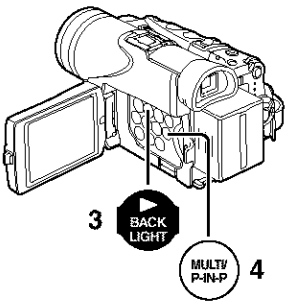

❶

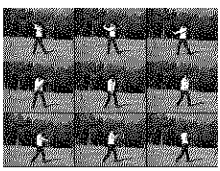

❷

❸

■Playing Back with Multi-Picture Mode

Strobe Multi-Picture Mode [STROBE] ❶:
You can capture 9 consecutive still pictures from playback images.
Manual Multi-Picture Mode [MANUAL] ❷:
Selecting a desired still picture one at a time, you can capture 9 still pictures.
Index Multi-Picture Mode ([PHOTO], [SCENE]) ❸:
You can capture 9 screens of pictures to which index signals are attached.
After setting [VCR FUNCTIONS] >> [DIGITAL EFFECT] >> [EFFECT SELECT] >> [MULTI]...

1 Set [MULTI-PICTURES] >> [SCAN MODE] >> [STROBE] or [MANUAL] or [PHOTO] or [SCENE], whichever mode you prefer.

When [STROBE] is selected:

- Set the [SPEED] to a desired strobe speed.
  - **[FAST]:** You can capture 9 consecutive still pictures within approximately 1 second
  - **[NORMAL]:** You can capture 9 consecutive still pictures within approximately 1.5 seconds
  - **[SLOW]:** You can capture 9 consecutive still pictures within approximately 2 seconds
- If you set [SWING] on the [MULTI-PICTURES] Sub-Menu to [ON], the intervals at which the 9 still pictures are taken are longer at the beginning and end than in the middle of the swing strobe period, and it is useful for analyzing swing motion, etc., in sports.

2 Exit the Menu by pressing the [MENU] Button.

3 Play back the tape.

- If you select Index Multi-Picture Mode, it is not necessary to play back the tape.

4 Press the [MULTI] Button.

- **If [STROBE] is selected:** 9 screens are automatically captured from the point at which the Button is pressed.
- **If [MANUAL] is selected:** press the [MULTI] Button at each scene you want to capture. When 9 screens are captured, the tape will stop.
- **If [PHOTO] or [SCENE] is selected:** From the point at which the Button is pressed, 9 screens of pictures to which index signals are attached are captured in the playback direction. After 9 screens are captured, the tape will stop, but, if there are 8 or less pictures to be captured, the tape will stop at its end.

Deleting All the Captured Multi-Pictures

While displaying the multi-pictures that have been captured, press the [MULTI] Button.

- If [MANUAL] has been selected, press the [MULTI] Button after 9 screens are displayed.

To Display the Multi-Pictures again

Press the [MULTI] Button for 1 second or longer.

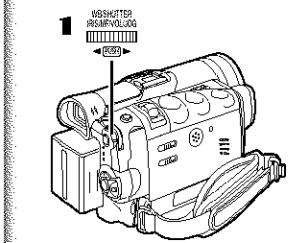

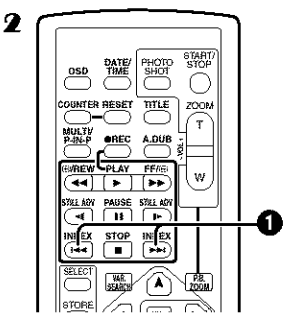

To Delete Multi-Pictures one by one (When Pictures have been captured in Manual Mode)

When the [MULTI] Button is pressed for 1 second or longer while the still pictures are displayed, the picture that was captured last is deleted. If you continue to press the Button, the pictures are deleted consecutively.

- After still pictures are deleted one at a time, they cannot be displayed again.

To Stop Capturing Pictures midway (When Pictures have been captured in Index Mode)

Press the [■] Button.

To Search the tape position of a desired picture among the playback pictures displayed on 9 screens

1 After displaying pictures in Multi-Picture Mode, rotate the [PUSH] Dial to select the image whose tape position you want to search.

- The selected picture is marked with a red frame.

2 Press the Index Button [⏮] or [⏭] ❶ on the Remote controller.

- Still picture playback takes place at the selected picture.

- For other notes, see page 90.

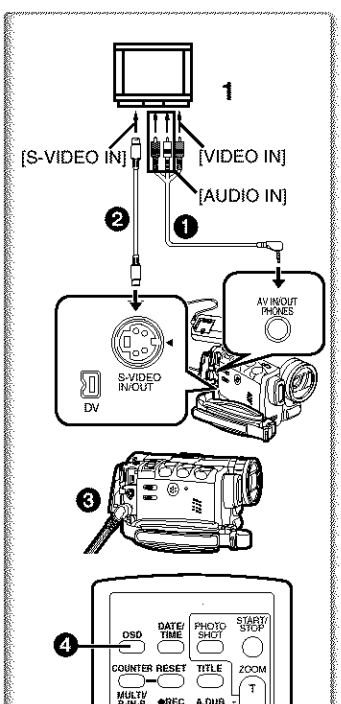

Playing Back on Your TV

By connecting your Palmcorder to your TV, the recorded scenes can be viewed on your TV screen.

- Before connecting them, turn off the power of both the Palmcorder and TV.

1 Connect the [A/V IN/OUT] Jack of the Palmcorder to the Video and Audio Input Jacks of the TV.

- Using the A/V Cable ❶ (supplied), make a connection with the TV. If the TV has an S-Video Jack, connect an S-Video Cable (not supplied) ❷, too.
- Plug the AV Cable as shown ❸ so that the cord hangs down.
- When plugging the pin plug of the A/V cable into the [A/V IN/OUT] Jack, plug it in as far as it goes.

Making the Indications Appear on the TV screen

Press the [OSD] Button ❹ on the Remote Controller.

- Be sure to select the proper input on your TV. (If necessary, consult your TV's operating instructions.)
- If you play back a Cassette recorded with copyright protection signals, the screen becomes blue or mosaic-like noise patterns appear.
- If you set [AV JACK] on the [AV IN/OUT SETUP] Sub-Menu to [IN/OUT], nothing will be shown on the TV screen except during playback.
- Picture size may be displayed differently when playing back a Cinema picture on a wide-screen TV with [B/W] or [SEPIA] of Playback Digital Effect.

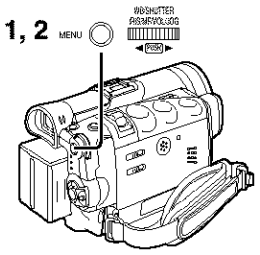

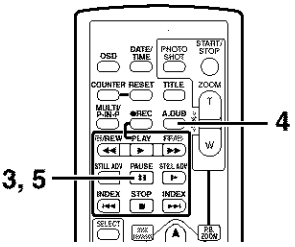

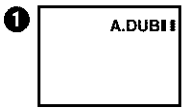

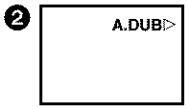

Audio Dubbing

You can add music or narration to the recorded Cassette.

- If you perform audio dubbing onto a tape that was recorded with [AUDIO REC] on the [RECORDING SETUP] Sub-Menu of the [CAMERA FUNCTIONS] Main-Menu set to [16bit], the original sound is erased. (If you want to preserve the original sound, use the [12bit] Mode when recording.)
- Audio Dubbing cannot be performed onto recordings made in LP Mode. **(➔ 27)**

1 Set [VCR FUNCTIONS] >> [AV IN/OUT SETUP] >> [AV JACK] >> [IN/OUT].

2 Continuing the aforesaid setup, select [A.DUB INPUT] >> [MIC] or [AV IN].

- Set to [AV IN] when external device is used, and to [MIC] when an external or built-in microphone is used.

3 Switch the Palmcorder over to the Still Playback Mode where you want to add new sound track.

4 Press the [A.DUB] Button on the Remote Controller.

- [A.DUB❚❚] Indication appears. ❶

5 To start Audio Dubbing, press the [❚❚] Button on the Remote Controller.

- [A.DUB▷] Indication appears. ❷

To Stop Audio Dubbing

Press the [❚❚] Button on the Remote Controller.
The Palmcorder is in the Still Playback Mode again.

To dub audio while listening to a pre-recorded sound

When pausing the audio dubbing, set the [12bit AUDIO] on the [PLAYBACK FUNCTIONS] Sub-Menu to [ST2] and you can check the pre-recorded sound. When a microphone is used for audio dubbing, use headphones to listen to the pre-recorded sound while dubbing the audio. (When using headphones, set [AV JACK] on the [AV IN/OUT SETUP] Sub-Menu to [OUT/PHONES].) When the line input is used, you can dub audio while listening to a pre-recorded sound from the speaker.

Playing Back the Sound Recorded with Audio Dubbing (For 12 bit Audio Recording)

Set [VCR FUNCTIONS] >> [PLAYBACK FUNCTIONS] >> [12bit AUDIO] >> [ST2] or [MIX].

ST1: Play back only the original sound.
ST2: Play back only the sound added by Audio Dubbing.
MIX: Play back both the original sound and the sound added by Audio Dubbing simultaneously.

- For other notes, see page 90.

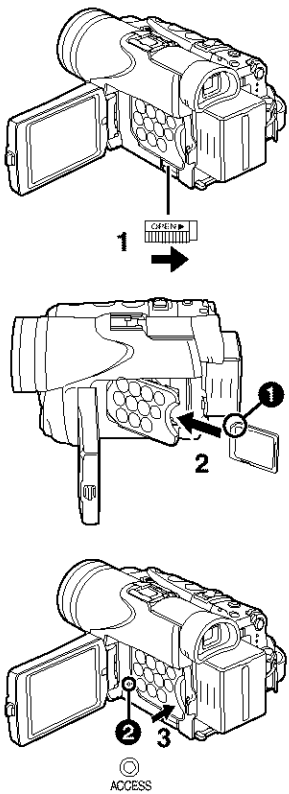

Special Features

Using a Memory Card

An SD Memory Card or MultiMediaCard can be used to record files or play back files.

- Use a genuine SD Memory Card or MultiMediaCard manufactured by Panasonic only.

Inserting a Memory Card

Before inserting a Memory Card, be sure to turn off the Palmcorder.

1 Slide the [OPEN] Lever to open the Card Slot Cover.

2 While holding the Memory Card with its cut corner ❶ on top, insert it into the Card Slot.

3 Close the Card Slot Cover securely.

Removing the Memory Card

Open the Card Slot Cover and pull it straight out.

- After removing the Card, close the Card Slot Cover.

[ACCESS] Lamp

While the Palmcorder is accessing the Card (reading, recording, playback, erasing, moving of images), the [ACCESS] Lamp ❷ lights up.

- While the [ACCESS] Lamp is on, **never** attempt to: pull out the Card, to turn off the Palmcorder power, or switch the [TAPE/CARD/CARD MODE] Selector. Such actions will damage the Card and cause the Palmcorder to malfunction.

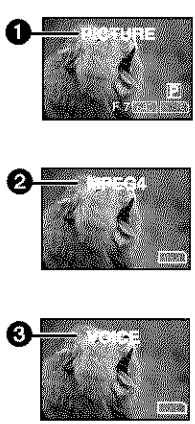

Recording on the Memory Card

3 kinds of data can be recorded by selecting with the [TAPE/CARD/CARD MODE] Selector. When recording a still picture, slide the [TAPE/CARD/CARD MODE] Selector until the [PICTURE] Indication ❶ appears (Card PhotoShot), when recording a moving picture, slide the [TAPE/CARD/CARD MODE] Selector until the [MPEG4] Indication ❷ appears (MPEG4 Recording), when recording voice, slide the [TAPE/CARD/CARD MODE] Selector until the [VOICE] Indication ❸ appears (Voice Recording).

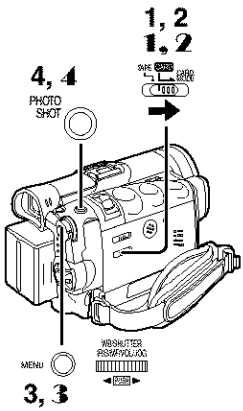

Card PhotoShot

Still pictures can be recorded on the Memory Card from the Palmcorder lens as well as from scenes that have already been recorded on a cassette.

The size of images that are recorded using this Palmcorder is approximately 1,230,000 pixels. Recording of images with a size that is larger than a million pixels is called mega-pixel still-picture recording. Compared to images of normal recording, images that are created by mega-pixel still-picture recording can be printed out more clearly.

Recording from the Palmcorder Lens (CAMERA Mode)

1 Slide the [TAPE/CARD/CARD MODE] Selector to [CARD].

2 Slide the [TAPE/CARD/CARD MODE] Selector to [CARD MODE] until the [PICTURE] Indication appears.

- Remaining Number of Card PhotoShot pictures ❶.

3 Set [CAMERA FUNCTIONS] >> [CARD SETUP] >> [PICTURE SIZE] >> [1280×960] or [640×480].

4 Press the [PHOTO SHOT] Button.

- The [PICTURE] Indication will light in red.

Concerning Low Light Shot

When recording dark scenes, set the [LOW LIGHT SHOT] of the [CARD SETUP] Sub-Menu to [AUTO]. (When the shutter speed is 1/30, Low Light Shot is activated, and the [CARD] Indication appears.)

- When [AUTO] is set for Low Light Shot, the brightness of the moving picture may suddenly be changed depending on the scene to be shot.

Recording from a Cassette (VCR Mode)

1 Slide the [TAPE/CARD/CARD MODE] Selector to [CARD].

2 Slide the [TAPE/CARD/CARD MODE] Selector to [CARD MODE] until the [PICTURE] Indication appears.

3 Set [VCR FUNCTIONS] >> [CARD SETUP] >> [PICTURE QUALITY] >> a desired picture quality.

4 Start playback and press the [PHOTO SHOT] Button at the scene you want to record.

- While the image is being recorded, it stays still for a few seconds.

- For other notes, see page 90.

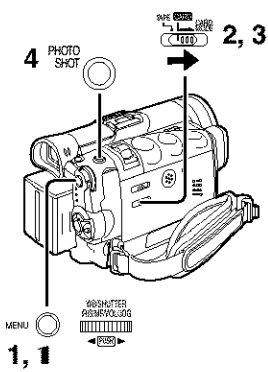

■Card PhotoShot (continued)

Recording from other equipment (CAMERA Mode)

1 Set [CAMERA FUNCTIONS] or [VCR FUNCTIONS] >> [CARD SETUP] >> [PICTURE QUALITY] >> a desired picture quality.

2 Slide the [TAPE/CARD/CARD MODE] Selector to [CARD].

3 Slide the [TAPE/CARD/CARD MODE] Selector to [CARD MODE] until the [PICTURE] Indication appears.

4 Input the picture from the other equipment then press the [PHOTO SHOT] Button at the desired scene.

Selecting the quality of Card PhotoShot images

1 Set [CAMERA FUNCTIONS] or [VCR FUNCTIONS] >> [CARD SETUP] >> [PICTURE QUALITY] >> a desired picture quality.

Maximum number of images recordable on the supplied Card (8 MB)

When the picture size is 640×480:

[FINE] (high image quality): approximately 45 pictures
[NORMAL] (Normal): approximately 95 pictures
[ECONOMY] (low image quality): approximately 190 pictures

When the picture size is 1280×960:

[FINE] (high image quality): approximately 8 pictures
[NORMAL] (Normal): approximately 14 pictures
[ECONOMY] (low image quality): approximately 20 pictures

- The figures vary depending on the subject being photographed.

- For other notes, see page 90.

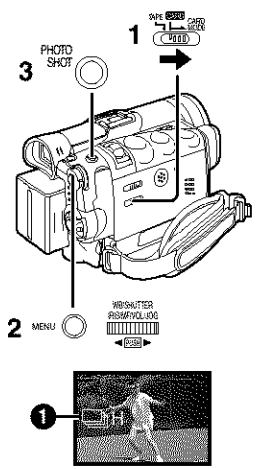

■RapidFire Consecutive Photoshot

The still pictures can be recorded on a Card at regular intervals.

- Available only with [640×480] picture size.

1 Slide the [TAPE/CARD/CARD MODE] Selector to [CARD].

2 Set [CAMERA FUNCTIONS] >> [CARD SETUP] >> [BURST MODE] >> [H] or [L].

- The [H] or [L] Indication ❶ is displayed.

3 Press the [PHOTO SHOT] Button.

- When [H] is selected, the still pictures can be recorded in approximately 0.07 seconds intervals until the [PHOTO SHOT] Button is released or 16 pictures are recorded.
- When [L] is selected, the still pictures can be recorded in approximately 0.7 seconds intervals until the [PHOTO SHOT] Button is released or 8 pictures are recorded.

- For other notes, see page 91.

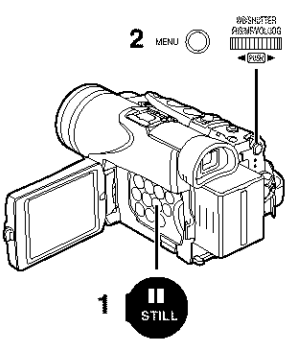

Automatically copying still pictures recorded on a cassette (VCR Mode)

The Palmcorder copies images automatically, referring to Photo Index signals.

After setting the Palmcorder to the VCR Mode (➔ 43).....

1. **Set the Palmcorder to Still Playback Mode just before the point where picture transfer is to commence.**
2. **Set [VCR FUNCTIONS] >> [PLAYBACK FUNCTIONS] >> [RECORD TO CARD] >> [YES].**
   - Search starts from the current Cassette position, and images with Photo Index signals are recorded onto the Card sequentially.
   - While copying, the Indication ❶ appears.

To Stop the Transfer of Images

Press the [■] Button.

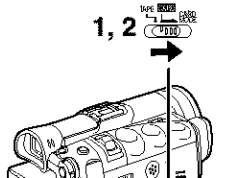

Recording Voice (Voice Recording Function)

You can record voice data on a memory card.

1. **Slide the [TAPE/CARD/CARD MODE] Selector to [CARD].**
2. **Slide the [TAPE/CARD/CARD MODE] Selector to [CARD MODE] until the [VOICE] Indication appears.**
3. **Press the Recording Start/Stop Button.**
   - Voice from built-in microphone is recorded.
   - It takes 2 to 3 seconds to start recording.
   - The recorded file is automatically locked (to prevent accidental erasure).
   - Voice from external microphone connected to the microphone jack can also be recorded.
   - During recording, the [VOICE] Indication is lit in red.
   - When Remaining Time Indication becomes [R:0h00m], [NO SPACE LEFT] Indication appears. Recording may not be started.

Maximum recording time on the supplied Card (8 MB)
Approximately 25 minutes

- For other notes, see page 91.

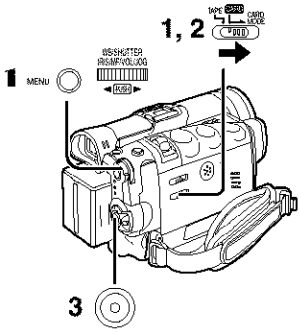

Recording Moving Pictures (MPEG4)

You can record moving pictures on a Memory Card for e-mailing. The recorded data can be also played back on a computer with Windows Media Player.

Recording from the Palmcorder Lens (Camera Mode)

1 Slide the [TAPE/CARD/CARD MODE] Selector to [CARD].

2 Slide the [TAPE/CARD/CARD MODE] Selector to [CARD MODE] until the [MPEG4] Indication appears.

3 Press the Recording Start/Stop Button.

- It takes 2 to 3 seconds to start recording.
- During recording, the [MPEG4] Indication is lit in red.
- The maximum continuous recording times are:
  [SUPERFINE] (super high image quality): 2 minutes
  [FINE] (high image quality): 2 minutes
  [NORMAL] (normal image quality): 120 minutes
  The Palmcorder will automatically stop recording when the approximate time listed above has elapsed (the card capacity has been fully utilized).

Recording from a Cassette (VCR Mode)

1 Slide the [TAPE/CARD/CARD MODE] Selector to [CARD].

2 Slide the [TAPE/CARD/CARD MODE] Selector to [CARD MODE] until the [MPEG4] Indication appears.

3 Start playback and press the Recording Start/Stop Button at the desired scene.

Selecting the quality of MPEG4 Recording images

1 Set [CAMERA FUNCTIONS] or [VCR FUNCTIONS] >> [CARD SETUP] >> [MPEG4 MODE] >> a desired image quality.

Maximum recording time on the supplied Card (8 MB)

[SUPERFINE]: approximately 1 minute and 30 seconds
[FINE]: approximately 2 minutes
[NORMAL]: approximately 6 minutes

- The video resolution of the camera is reduced when making an MPEG4 recording. This is done in order to optimize the image quality in MPEG4 recordings, and does not reflect that there is a problem with the software or hardware.

- For other notes, see page 91.

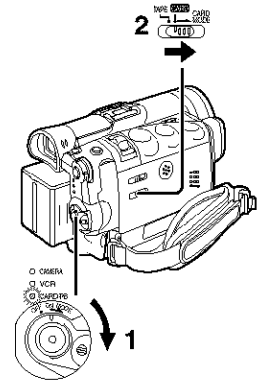

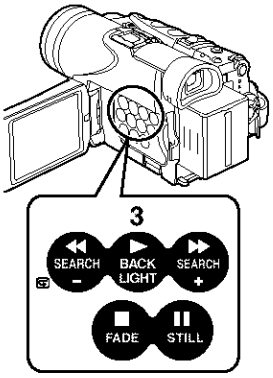

❶ CARD CONTENTS
PICTURE
MPEG4
VOICE

Playing Back Files from the Memory Card

You can play back files recorded on a Card.

- When you set the Palmcorder to Card Playback Mode, the card contents ❶ are displayed to inform you of the type of data (still picture, moving picture and/or voice data) recorded on the Card.

1 Set the Palmcorder to Card Playback Mode.

- The [CARD PB] Lamp lights up.
- The file that was recorded last on the Card is displayed.

2 Slide the [TAPE/CARD/CARD MODE] Selector to [CARD MODE] until the [PICTURE], [MPEG4] or [VOICE] Indication appears.

3 Start Playback.

■Playing back Still Pictures

▶: Starts Slide Show (The [SLIDE▷] Indication is displayed)
▶▶: Playing back the next picture
◀◀: Playing back the previous picture
■: Stop the slide playback
❚❚: Pause slide playback

■Playing back Moving Pictures (MPEG4)

▶: Playing back
▶▶: (Stop Mode) To the beginning of the next file
(Playback Mode) To the beginning of the next file picture and start playback
(Pause Mode) To the beginning of the next file and turns to Stop Mode
◀◀: (Stop Mode) To the beginning of the previous playback file
(Playback Mode) To the beginning of the playback file and start playback
(Pause Mode) To the beginning of the file under playback and turns to Stop Mode
■: Stop playback
❚❚: This button does not pause playback within 1 second of finishing playback.

- File is numbered in hexadecimal form.
- When the object is moving fast or zoom operation is performed, picture may appear to be still or a mosaic noise pattern appears, but this is not a malfunction.

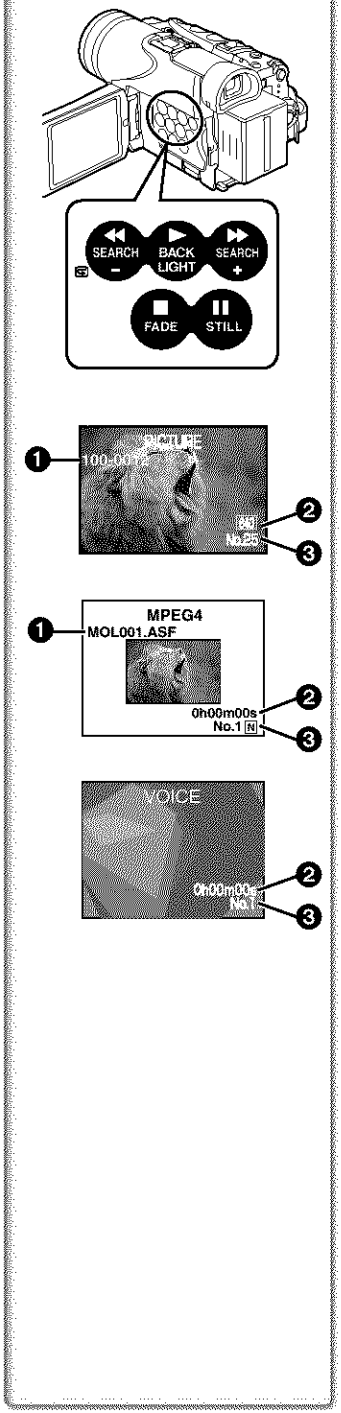

Playing back Voice recordings

►: Playing back

►►: (Stop Mode) To the beginning of the next file
(Playback Mode) To the beginning of the next file and start playback
(Pause Mode) To the beginning of the next file and turns to Stop Mode

◄◄: (Stop Mode) To the beginning of the previous playback file
(Playback Mode) To the beginning of the playback file and start playback
(Pause Mode) To the beginning of playback file and turns to Stop Mode

■: Stop playback

❚❚: This button does not pause playback within 1 second of finishing playback.

- If the [◄◄] Button or [►►] Button is pressed for 1 or more seconds during playback, it becomes 10× playback speed and if pushed for 7 or more seconds, it becomes 60× playback speed. Releasing the button brings it back to normal playback.

❶ Folder-File Number (When the picture is played back)
File Name (When the MPEG4 data is played back)

❷ Picture Size (When the picture is played back) **(➔ 83)**
Playback time (When MPEG4 data or Voice data is played back)

❸ File Number (When the picture or Voice data is played back)
File Number and MPEG4 Picture Quality (When the MPEG4 data is played back)

To adjust the volume (Only when playing back MPEG4 and Voice Recordings)

- During playback, hold down the [PUSH] Dial until the volume indication appears and rotate it to adjust the volume. **(➔ 43)**

- For other notes, see page 92.

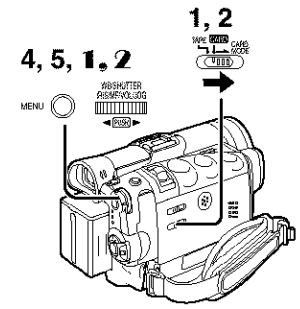

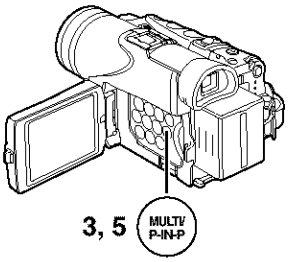

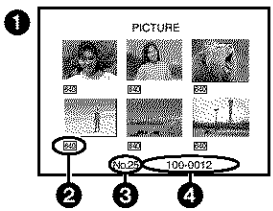

■To Select a Desired File and Play it Back

After setting the Palmcorder to the Card Playback Mode (➔ 57).....

1 Slide the [TAPE/CARD/CARD MODE] Selector to [CARD].

2 Slide the [TAPE/CARD/CARD MODE] Selector to [CARD MODE] until the desired type of data indication appears.

3 Press the [MULTI] Button.

- The files recorded on the Memory Card are displayed in Multi-Picture Mode. ❶

4 Rotate the [PUSH] Dial and select a desired file.

- The selected file is marked with a red frame.
- When 7 or more files have been recorded, rotate the [PUSH] Dial to display the next file. The [◀◀] Button or [▶▶] Button can be used instead of the [PUSH] Dial.

5 Press either the [PUSH] Dial or the [MULTI] Button.

- The selected file is shown on the entire screen.

❷ Picture Size (When [PICTURE] is selected at Step 2)
MPEG4 Picture Quality (When [MPEG4] is selected at Step 2)
❸ File Number
❹ Folder-File Number (When [PICTURE] is selected at Step 2)
File Name (When [MPEG4] is selected at Step 2)

■Using File Search Mode

1 Set [CARD FUNCTIONS] >> [CARD EDITING] >> [FILE SEARCH] >> [YES].

- The file search screen ❺ appears.

2 Rotate the [PUSH] Dial to select the desired number of the file and then press it.

- The selected number's file appears.

- The same process can be performed using the short-cut menu **(➔ 26)**.

- For other notes, see page 92.

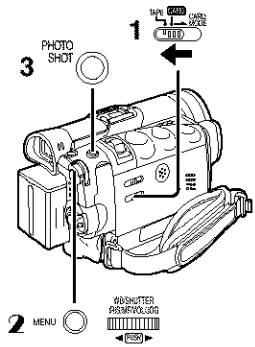

❶

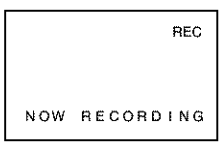

Copying Pictures from a Memory Card to a Cassette

After setting the Palmcorder to the Card Playback Mode (➔ 57).....

To Copy One Picture

1 Slide the [TAPE/CARD/CARD MODE] Selector to [TAPE].

2 Display a desired picture on a Memory Card.

- Please refer to "To select a Desired File and Play it Back".

3 Press the [PHOTO SHOT] Button.

- It takes a few seconds to copy a still picture to the Cassette.
- During the copying, the Indication ❶ appears.

- When recording to tape, select the tape position before recording. The picture will be recorded to the selected tape location when the [PHOTO SHOT] button is pressed in step 3.

To Copy All the Pictures

1 Display the first picture.

- If a picture other than the first one is displayed, only the subsequent pictures will be copied.

2 Set [CARD FUNCTIONS] >> [CARD EDITING] >> [RECORD TO TAPE] >> [YES].

- During the copying, the Indication ❶ appears.
- It takes a few seconds for each picture to be copied to the cassette. To stop the copying midway, press the [■] Button.

- For other notes, see page 92.

1, 2, 3, 4, 5, 6, 7
1, 2, 3

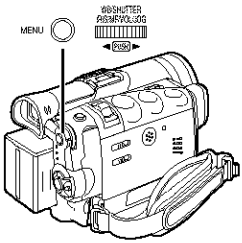

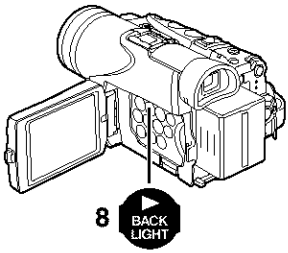

Slide Show

The recorded still pictures in the Card can be played back like a Slide Show. You can set up a Slide Show or change the content.

To Select Pictures to Play Back in Slide Show

1 Set [CARD FUNCTIONS] >> [CARD EDITING] >> [SLIDE SHOW] >> [YES].
- Slide Show editing screen appears.

2 Set [EDIT] >> [YES].

3 Rotate the [PUSH] Dial to select playback order and then press the dial.

4 Rotate the [PUSH] Dial to adjust the playback time and then press the dial.
- This step is skipped when there are no pictures set for the Slide Show.

5 Rotate the [PUSH] Dial to select playback order and then press the dial.
- The Playback Order indication ❶ and the Playback Time (Second) indication ❷ appear.
- The [●] indication ❸ is displayed below pictures that have been selected for the Slide Show. (➜ 83)
- To select the next picture, repeat Steps 3 to 5 above.

6 Press the [MENU] Button to end the setup.

7 After setting [SLIDE SHOW] >> [PRESET], press the [MENU] Button.

8 Press the [▶] Button.
- The [M.SLIDE▷] Indication is displayed. ❹

To Play Back All the Pictures Continuously

After setting the [SLIDE SHOW] to [ALL], press the [▶] Button.
- The [SLIDE▷] Indication is displayed. ❺
- All pictures are played back for approximately 5 seconds each, from the first to the last recorded picture, and playback then stops.

To Pause the Slide Show

Press the [❚❚] Button.
- The [(M.) SLIDE❚❚] Indication is displayed. ❻

To Stop the Slide Show

Press the [■] Button.

To Verify the Selected Pictures

Set [CARD FUNCTIONS] >> [CARD EDITING] >> [SLIDE SHOW] >> [YES] >> [VERIFY] >> [YES].
- Only the selected pictures are displayed in Multi-Picture Mode in the Playback order.

To Delete the Selected Pictures

1 Set [CARD FUNCTIONS] >> [CARD EDITING] >> [SLIDE SHOW] >> [YES].

2 Set [DELETE] >> [YES].

3 Select the picture you want to delete and press the [PUSH] Dial.

To Reset the Slide Show Setup

Set [CARD FUNCTIONS] >> [CARD EDITING] >> [SLIDE SHOW] >> [YES] >> [RESET] >> [YES] >> [YES].
- Slide Show settings are reset.
- For other notes, see page 92.

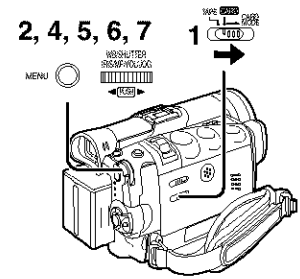

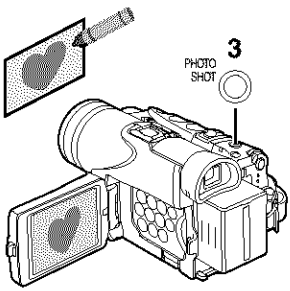

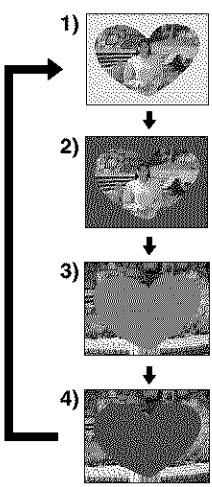

Creating a Title

You can create a title and record on a Memory Card.

1 Camera Mode:
Slide the [TAPE/CARD/CARD MODE] Selector to [CARD MODE] until the [PICTURE] Indication appears.
Set the Lens to the image you want to use for creating a title.
VCR Mode:
Search for the image you want to use for creating a title and set the Palmcorder to the Still Playback Mode.

2 Set [CARD SETUP] >> [CREATE TITLE] >> [YES].

3 Press the [PHOTO SHOT] Button.
- The title is stored.
- To perform PhotoShot again, select [RETURN].

4 Rotate the [PUSH] Dial to select [LUMINANCE] and press it.

5 Rotate the [PUSH] Dial to adjust the title contrast and then press it.
- The [COLOR] Indication appears.

6 Rotate the [PUSH] Dial to select desired color and press it.

7 Select [RECORD] and then press the [PUSH] Dial.

Selecting Colors

If you make color selection by rotating the [PUSH] Dial when creating a title, you can change the color as follows.

1) Original Color (The color of the captured image)
   - Title in the original color in which the dark portion (blackish portion) of the captured image is missing.
2) Preset colors (black, blue, green, cyan, red, magenta, yellow, and white)
   - Title in a preset color in which the dark portion (blackish portion) of the captured image is missing.
3) Original color (the color of the captured image)
   - Title in the original color in which the bright portion (whitish portion) of the captured image is missing.
4) Preset colors (black, blue, green, cyan, red, magenta, yellow, and white)
   - Title in a preset color in which the bright portion (whitish portion) of the captured image is missing.

- For other notes, see page 93.

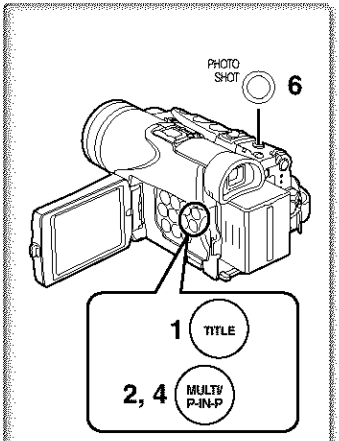

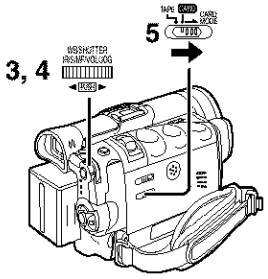

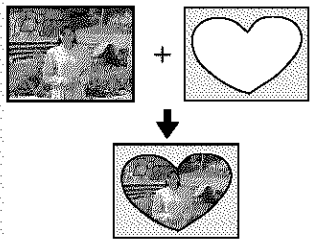

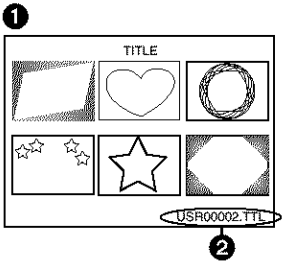

Inserting a Title

You can select one of your original titles and display it. (It can be displayed in Camera Mode, VCR Mode, and Card Playback Mode.)

1 Press the [TITLE] Button.
- The title that was created last is displayed.

2 Press [MULTI] Button.
- A list of titles is displayed. ❶

3 Rotate the [PUSH] Dial to select a desired title.
- The selected title is marked with a red frame.

4 Press the [PUSH] Dial or press the [MULTI] Button.
- The selected title is displayed.

5 Using the [TAPE/CARD/CARD MODE] Selector, select the recording target.

Camera Mode: TAPE or CARD
VCR Mode: CARD
Card Playback Mode: TAPE

6 Press the [PHOTO SHOT] Button.
- A still picture is recorded under the inserted title.
- If you record on a Cassette in Normal Recording Mode, set the [TAPE/CARD/CARD MODE] Selector to [TAPE] and press the Recording Start/Stop Button.

❷ File Name

Clearing a Title Display

Press the [TITLE] Button.

• For other notes, see page 93.

1, 2, 3

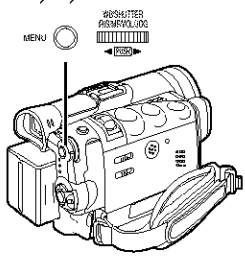

❶

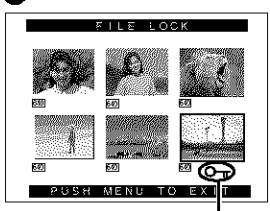

❷

Protecting the Files on a Memory Card from Accidental Erasure (File Lock)

Precious files recorded on a Memory Card can be locked to prevent accidental erasure. (Even if files are locked, the files will be deleted when the Memory Card is formatted.)

After setting the Palmcorder to the Card Playback Mode (➔ 57).....

1 Set [CARD FUNCTIONS] >> [CARD EDITING] >> [FILE LOCK] >> [YES].

- The [FILE LOCK] ❶ Menu is displayed.

2 Rotate the [PUSH] Dial to select [PICTURE] or [TITLE], and then press it.

3 Rotate the [PUSH] Dial to select the file to be locked, and then press it.

- The [O-r] Indication ❷ is attached to the selected file.
- Files recorded by Voice Recording Function are automatically locked (to prevent accidental erasure).
- Press the [PUSH] Dial again to cancel.

- The Lock Setting carried out by this Palmcorder is only effective for this Palmcorder.
- The same setting can be performed using the short-cut menu (➔ 26).

About the write protection switch of the SD Memory Card

- The SD Memory Card has a write protection switch on it. If the switch is set to the [LOCK] side, you cannot write to the Card, delete the data, or format the Card. If it is moved back, you can.
- If the MPEG4 data is recorded by another Palmcorder you may not be able to cancel the lock setting.

Deleting the Files Recorded on a Memory Card

Using the Palmcorder, you can delete the still picture files and titles recorded on a Memory Card. **After the file is deleted, it cannot be restored.**

At first, slide the [TAPE/CARD/CARD MODE] Selector to [CARD] to select the type of data to be erased.

After setting the Palmcorder to the Card Playback Mode (➔ 57).....

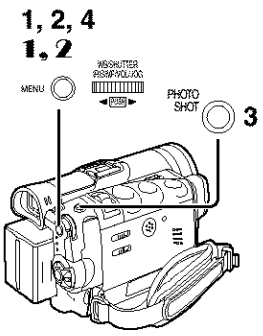

To Select and Delete File(s) by selection

1. **Set [CARD FUNCTIONS] >> [DELETE CARD FILE] >> [DELETE FILE BY SELECTION] or [DELETE TITLE BY SELECTION].**
2. **Rotate the [PUSH] Dial to select the file that you want to delete, and then press it.**
   - The selected file flashes.
   - To delete more than 1 file, repeat this step.
3. **Press the [PHOTO SHOT] Button.**
   - A verification message appears.
4. **Rotate the [PUSH] Dial to select [YES] and then press it.**
   - The selected file is deleted from the Memory Card.

To Delete all Files

1. **Set [CARD FUNCTIONS] >> [DELETE CARD FILE] >> [DELETE ALL FILES].**
   - A verification message appears.
2. **Rotate the [PUSH] Dial to select [YES] and then press it.**
   - All the files of the selected Card Mode ([PICTURE], [MPEG4] or [VOICE]) are erased.
   - A locked file cannot be deleted.

- The same setting can be performed using the short-cut menu (➔ 26).
- When you delete a Voice File, be sure to cancel the Lock setting before deleting.
- Do not delete a Voice File recorded with this Palmcorder using other devices.

1, 2

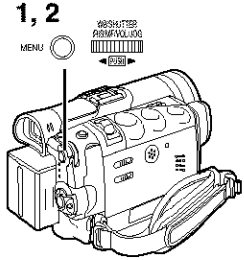

❶

Formatting a Memory Card

If a Memory Card becomes unreadable by the Palmcorder, formatting it may make it reusable. Formatting will delete all the data recorded on a Memory Card.

After setting the Palmcorder to Card Playback Mode (➔ 57).....

1 Set [CARD FUNCTIONS] >> [CARD EDITING] >> [CARD FORMAT] >> [YES].

2 Select [YES] and press the [PUSH] Dial.

- During formatting the [NOW FORMATTING] Indication ❶ appears.
- When the formatting is completed, the screen becomes white.

- For other notes, see page 93.

1, 2, 3, 4, 5

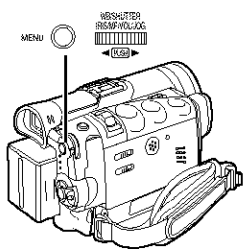

DPOF Setting

You can select the images to be printed, the number of prints, and other print-related information (DPOF setting) on a Memory Card. "DPOF" stands for Digital Print Order Format, and since printing data can be added to images on the Memory Card, the Memory Card can be used with any printers that support DPOF.

After setting the Palmcorder to Card Playback Mode (➔ 57).....

1 Set [CARD FUNCTIONS] >> [CARD EDITING] >> [DPOF SETTING] >> [YES].

2 Rotate the [PUSH] Dial to select [VARIABLE] and then press it.

- When printing one each of all the pictures, select [ALL 1]; if not all the pictures are to be printed, select [ALL 0].

3 Rotate the [PUSH] Dial to select the picture and then press it.

4 Rotate the [PUSH] Dial to set the number of prints ❶ and then press it.

- The framed images will be set to DPOF and the [●] mark ❷ will be displayed. The [●] mark indicates pictures for which 1 or more prints have been set. **(➔ 83)**

5 Repeat Step 3–4 to set other pictures, and press the [MENU] Button when the setting is completed.

To Verify DPOF Setting

Select [VERIFY] in Step 2 above. The pictures for which 1 or more prints are set in DPOF are played back continuously.

- DPOF Print mark is based on DPOF (Digital Print Order Format).
- The same setting can be performed using the short-cut menu **(➔ 26)**.
- The number of prints can be set from 0 to 99.
- Perform DPOF setting on the Palmcorder you are using.
- It may take some time to verify the DPOF setting. Please wait until the [ACCESS] Lamp goes off.

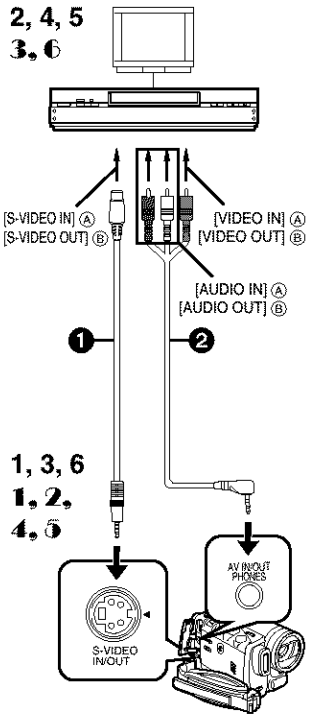

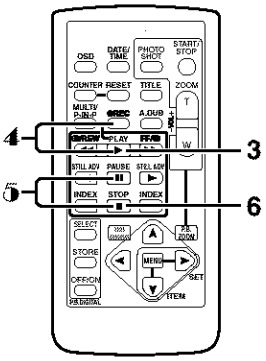

Copying your DV Cassette to an S-VHS or VHS Cassette (Dubbing)

After connecting the Palmcorder and the S-Video, Video and Audio Input Jacks Ⓐ of the VCR as illustrated on the left, start the following procedure.

- Be sure to press the [OSD] Button on the Remote Controller before copying so that no indications are left visible. Otherwise, the displayed tape counter and Function indications are also copied.

[Palmcorder]

1 Insert the recorded Cassette.

[VCR]

2 Insert a blank Cassette with an erasure prevention tab.

- If various settings (such as external input, tape speed, etc.) are required, please refer to the operating instructions of your VCR.

[Palmcorder]

3 Press the [▶] Button to start playback.

[VCR]

4 Start recording.

5 Press the Pause or Stop Button to stop recording.

[Palmcorder]

6 Press the [■] Button to stop playback.

❶ S-Video Cable (not supplied) ❷ A/V Cable (supplied)

Copying an S-VHS or VHS Cassette to your DV Cassette

After connecting the Palmcorder and the S-Video, Video, Audio Output Jacks Ⓑ of the other equipment as illustrated on the left, start the following procedures.

- You need the Remote Controller.

[Palmcorder]

1 Set [VCR FUNCTIONS] >> [AV IN/OUT SETUP] >> [AV JACK] >> [IN/OUT].

2 Insert a blank Cassette with an erasure prevention tab.

[Other Equipment]

3 Insert a recorded Cassette and start playback.

[Palmcorder]

4 While pressing the [REC] Button, press the [PLAY] Button. (Both buttons are located on the Remote Controller.)

5 Press the [❚❚] Button or [■] Button to stop recording.

[Other Equipment]

6 Press the Stop Button to stop playback.

❶ S-Video Cable (not supplied) ❷ A/V Cable (supplied)

CAUTION:

Unauthorized exchanging and/or copying of copyrighted recordings may be copyright infringement.

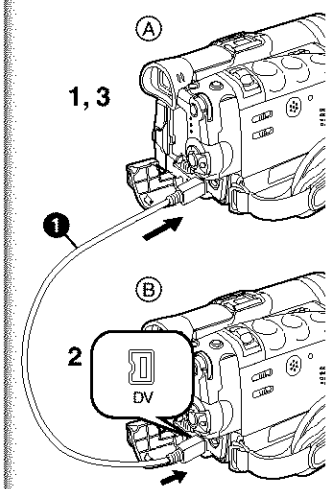

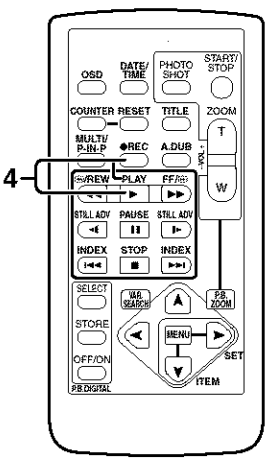

Using your Palmcorder with Digital Video Equipment (Dubbing)

By connecting this Palmcorder with other digital video equipment (such as another Palmcorder of the same format/model) that has a DV input/output terminal, and using a 4-pin to 4-pin DV Interface cable PV-DDC9/PV-DDC9-K (optional) ❶, high quality images and sounds can be dubbed in the digital mode.

[Playback Unit Ⓐ]

1 Insert the recorded Cassette and set the Palmcorder to the VCR Mode.

[Recording Unit Ⓑ]

2 Insert a Cassette to be used for dubbing and set the Palmcorder to the VCR mode.

[Playback Unit Ⓐ]

3 Press the [▶] Button to start playback.

[Recording Unit Ⓑ]

4 While pressing the [REC] Button, press the [PLAY] Button. (Both Buttons are located on the Remote Controller.)

- Recording starts.

Stopping Dubbing

Press the [■] Button on the recording unit first, and then press the [■] Button on the playback unit to stop dubbing.

CAUTION:

Unauthorized exchanging and/or copying of copyrighted recordings may be copyright infringement.

- For other notes, see page 93.

■Analog-Digital Conversion

When the Palmcorder is connected with other digital video equipment through its DV Terminal, the analog format pictures which have been input from other external equipment can be output to the digital video equipment through the DV Terminal.

- To DV-output analog video signals sent from other equipment, set [DV OUT] on the [AV IN/OUT SETUP] Sub-Menu to [ON]. (Normally, keep the [DV OUT] set to [OFF]. If it is set to [ON], the quality of the image may be deteriorated.)

CAUTION:

Unauthorized exchanging and/or copying of copyrighted recordings may be copyright infringement.

- Please refer to "Recording to a Card from other equipment" **(→ 91)**.

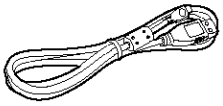

VFA0397

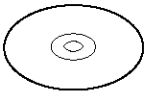

VFF0193

2, 3 ❶

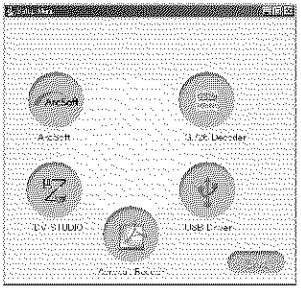

Using the Software with a Computer

An image stored on the DV Cassette can be transferred to your Personal Computer.

■Software Installation (Windows)

1 Turn on Computer and start up Windows.

2 Insert supplied CD-ROM into the CD-ROM drive.

- [Setup Menu] ❶ appears.

3 Select the software to be installed from [Setup Menu].

- **USB Driver (➔ 69):**
  Software for USB Driver allows you to transfer images directly from the memory card into the computer. (Please refer to page 70 to install the driver of the USB Driver.)
- **DV STUDIO 3.1E-SE (➔ 74):**
  Using the DV STUDIO 3.1E-SE software allows you to capture video recorded on a tape or still images viewed through the lens of a camera.
- **G.726 Audio Decoder (➔ 75):**
  Software for G.726 Audio Decoder allows you to listen to MPEG4 sound with Windows Media Player.
- **ArcSoft Software (➔ 76):**
  PhotoImpression 4.0, PhotoBase 4.0, Panorama Maker 3.0 and PhotoPrinter 4.0 are included.

4 Follow the instructions on the computer screen until the installation is complete.

- Setup window will disappear when the installation is complete.

Note:

If a window does not appear automatically, click the "Start" Button on your desktop and then click "Run". When the "Run" Box is open, type in "D:\InstMenu.exe" and click "OK". ("D" applies when the CD-ROM drive is drive D.)

Using USB Driver

■Operating environment

- Despite having the operating environment indicated, it may not be possible to use the program with some types of personal computers.
- A CD-ROM drive is required to install this program.

OS:
IBM-PC/AT compatible personal computer with pre-installed;
Microsoft Windows XP Home Edition/Professional
Microsoft Windows 2000 Professional
Microsoft Windows Me (Millennium Edition)
Microsoft Windows 98 Second Edition

CPU:
Intel Pentium II/ Celeron 300MHz or higher (including compatible CPU)

RAM:
32 MB or more (64 MB or more is recommended)
(128 MB or more are required for Windows XP.)

Free hard disk space:
At least 1 MB

Ports:
USB Terminal

4

❶

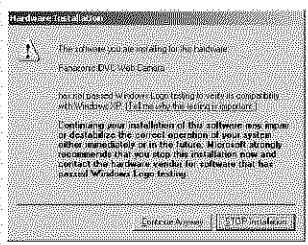

❷

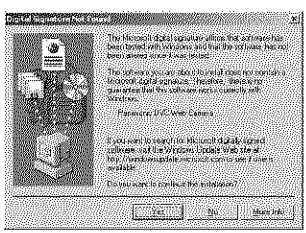

1

2

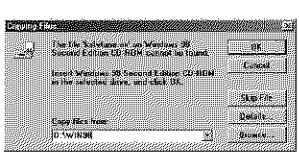

Installing USB Driver

Please install USB Driver first before connecting the Palmcorder to your Personal Computer with the USB Connection Cable.

1 Turn on the Personal Computer and start up Windows.

2 Insert the supplied CD-ROM into the personal computer's CD-ROM drive.

- Quit all applications.
- [Setup Menu] appears.

3 Finish installation by following the on-screen instructions.

- Click [Next] and proceed with installation.
- Carefully read the license agreement on the window, and if you agree click [Yes]. Software is not installed if [No] is clicked.
- After completing the installation, Click [Finish].

For Windows XP Users

The message ❶ is displayed during installation. However, testing by the manufacturer has confirmed functionality of this Palmcorder with Windows XP. Click [Continue Anyway] and proceed.

For Windows 2000 Users

The message ❷ is displayed during installation. However, testing by the manufacturer has confirmed functionality of this Palmcorder with Windows 2000. Click [Yes] and proceed.

4 Click [OK] when the [Restarting Windows] Dialogue appears.

- Reboot the computer to finish installing USB driver.
- Installation continues after the computer reboots if you selected additional software.

- If you use Windows XP/2000, you need to specify the folder in which the driver is to be installed when the Palmcorder is connected for the first time. **(➔ 71)**
- A message indicating a conflict between versions may be displayed during the installation. This will not cause a problem. Simply click [Yes] to proceed with the installation.
- Depending on the OS version, illustrations and icon names may vary.

■For Windows 98SE/Me Users

The following messages may be displayed during the installation depending on the environment of the personal computer. Install the USB Driver as instructed below. Otherwise, it won't be installed correctly.

1 The message, "The file 'PMJ1519X.EXE' on [Unknown] cannot be found..." is displayed.

- Enter "D:\USBDriver\Drivers\WebCam" (if the CD-ROM drive is assigned to the D drive) and click [OK].

2 The message "The file 'kstvtune.ax' on [Unknown] cannot be found..." is displayed.

- Enter "C:\Windows\system" for Windows 98SE.
- Enter "C:\Windows\options\CABS" for Windows Me.
- If the "kstvtune.ax" file is missing in one of the 2 above-mentioned folders, insert the OS CD-ROM and assign the path.

3 The message "The file 'ksclockf.ax' on [Unknown] cannot be found..." is displayed.

- Enter "C:\Windows\system".
- If the "ksclockf.ax" file is missing in the above mentioned folder, insert the OS CD-ROM and assign the path.

- You may click [Browse] to look for and assign the path.

Connecting Computer and Palmcorder

Install USB Driver before connecting.

Never connect the USB Connecting Cable until the USB Driver is installed.

Before making these connections, turn off all devices which are to be connected.

1 Install the supplied USB Driver.

2 Insert memory card into Palmcorder, then set card playback mode.

3 Use auxiliary USB Connection Cable to connect.

- PC connecting mode.

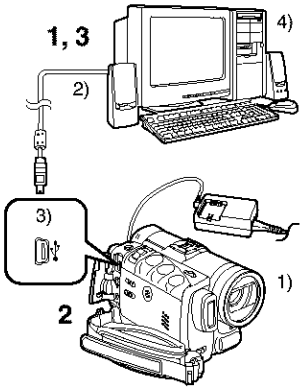

1) Palmcorder
2) USB Connection Cable
3) USB terminal
4) Personal computer (not supplied)

- After making the connections, turn the connected equipment on.
- Appropriate driver to recognize Palmcorder is automatically installed by Windows Plug'n Play when connected for the first time.
- When using the USB Connection Kit, it is recommended that you use the AC Adaptor as the power supply of the Palmcorder.
- After the USB Driver is installed and USB Connection Cable is connected to the Palmcorder, open [My computer] or [Windows Explorer] to check that the drive is displayed as a removable disk drive (only when card is inserted into the Palmcorder). It enables you to operate in the same way as a floppy disk drive, and you can use the same drag and drop or copy methods.

1

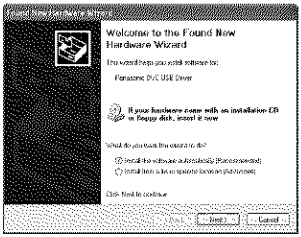

2

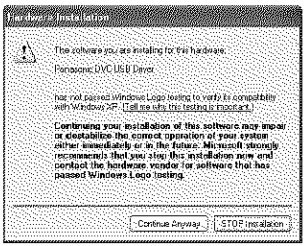

3

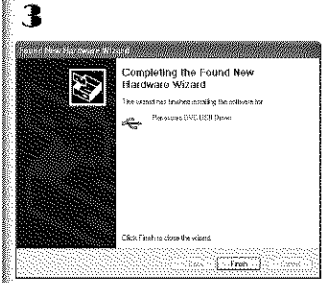

■For Windows XP/2000 Users

When the Palmcorder is connected for the first time in both the Card Playback Mode and the VCR/Camera Mode, the "Found New Hardware Wizard" is displayed. **(If there are two or more USB terminals and you pull out and reconnect the USB cable to another terminal, this display appears.)**

1 Click [Next].

2 Click [Continue Anyway].

- Testing by the manufacturer has confirmed functionality of this Palmcorder.
- If the [Insert disc] screen is displayed, click [OK].

3 After the completion of setting, click on [Finish].

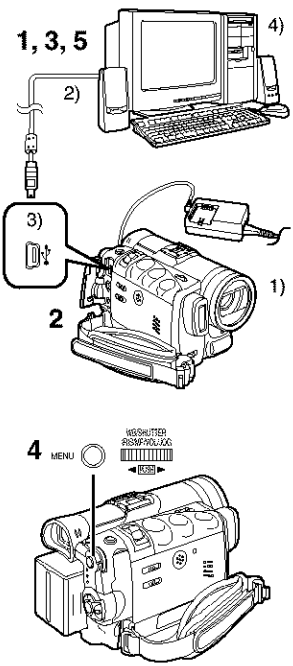

Using as a Web Camera

If the Palmcorder is connected to your personal computer, you can send video from the Palmcorder to the other parties via the network. Audio may also be exchanged if the personal computer is configured accordingly.

■Operating environment

To use the Palmcorder as a Web Camera, the additional minimum requirements must be met.

Graphic display:

High Color (16 bit) or more

Desktop resolution of 800×600 dots or more

Communication Speed:

56 kbps or faster is recommended

Necessary software:

Microsoft NetMeeting 3.01 or later

Other requirements (to send/receive audio):

Sound card

Microphone

Speaker or headphones

To use the Palmcorder as a Web Camera, the following conditions must be met.

- You have direct connection to the Internet.
- Install Microsoft Windows NetMeeting 3.01 or later.
- If the installed version is not the latest, update it by performing the Windows update.
- If you are connected to the Internet through a firewall or a router, proper communication will not be possible.
- Your Internet provider must provide a global IP.
- The installer is available only in English but can be used on operating systems using other languages.

■Connecting the Palmcorder to Personal Computer (For Using as a Web Camera)

1 Install the USB Driver. (➔ 70)

2 Set the Palmcorder to Camera Mode.

3 Connect the Palmcorder to Personal Computer with auxiliary USB Connection Cable.

4 Set [CAMERA FUNCTIONS] >> [CAMERA SETUP] >> [WEB CAMERA] >> [ON].

- It enters WEB CAMERA Mode.

5 Start the NetMeeting.

- Click [Start] >> [ALL Programs (Programs)] >> [Accessories] >> [Communications] >> [NetMeeting].
- If you use Windows XP, you can start NetMeeting by selecting [Start] >> [Run], entering "conf" and clicking [OK].

1) Palmcorder
2) USB Connection Cable
3) USB terminal
4) Personal computer (not supplied)

1

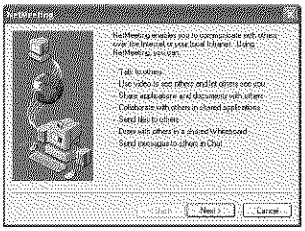

2

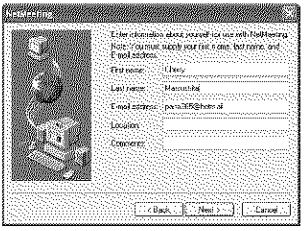

- If the Palmcorder is used as a Web Camera, the quality of the video to be exchanged will depend on the Internet connection status.
- If the USB Connection Cable is disconnected from the personal computer, the WEB CAMERA mode is cancelled.
- In the WEB CAMERA mode, video cannot be recorded onto a tape or a card.
- If the Palmcorder is used as a Web Camera while virus checking software is running, the Palmcorder's operation may stop midway through. In this case, exit the NetMeeting, reconnect the Palmcorder and restart the NetMeeting.
- When the LCD Monitor is opened and rotated frontward in the WEB CAMERA Mode, the Viewfinder becomes deactivated.

■Setting up the NetMeeting

When starting the NetMeeting for the first time, its setup screen is displayed. (However, the screen is not displayed if the NetMeeting setup has already been done.)

1 Click [Next].

2 Enter the User information, carefully read the displayed contents, and then proceed.

- Please refer to the instruction manual of your personal computer for how to configure the audio and the microphone.
- To communicate with persons using Windows in other languages, setting up using alphabets or numbers is recommended.

3 After these, without setting up anything else, please click [Next] to continue further, and the setup is completed.

- NetMeeting is activated.
- Please refer to the HELP file of the Windows NetMeeting for understanding its operation.
- During set up, if [Primary video capture device] selection screen is displayed, [Panasonic DVC Web Camera] is selected.
- Send the sound by using the microphone attached to the Personal Computer.
- If the Palmcorder is used as a Web Camera continuously for two hours, the communication is automatically shut OFF. In this case, restart NetMeeting and set up the communication again.

2

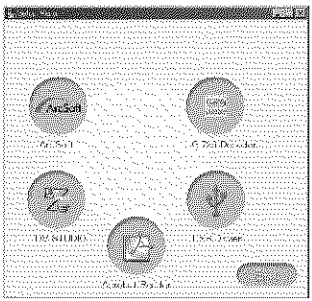

3

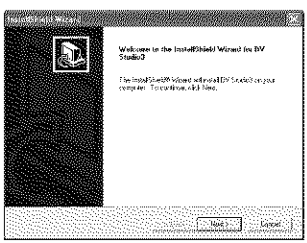

4

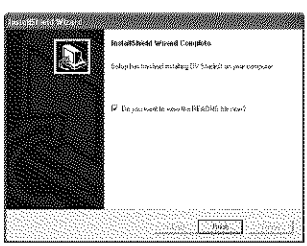

Using the DV STUDIO 3.1E-SE

■Operating environment

OS:

IBM-PC/AT compatible personal computer with pre-installed;
Microsoft Windows XP Home Edition/Professional
Microsoft Windows Me (Millennium Edition)
Microsoft Windows 98 Second Edition

CPU:

Intel Pentium II/Celeron 300MHz or higher (including compatible CPU)

Graphic display:

High Color (16 bit) or more
Desktop resolution of 800×600 dots or more

RAM:

32 MB or more (64 MB or more is recommended)
(128 MB or more are required for Windows XP.)

Free hard disk space:

At least 20 MB

Ports:

USB Terminal

Other requirements:

Mouse

- Operation is not guaranteed on Windows 2000.
- When 2 or more USB devices are connected to a personal computer, or when devices are connected through USB hubs or by using extension cables, proper operation is not guaranteed.
- When connected to the keyboard USB terminal, normal function may not be possible.
- This instruction manual describes only the procedures for installation, connection and start-up. Please read the PDF-based instructions for how to use the DV STUDIO 3.1E-SE.
- To view the installed operating instructions, Adobe Acrobat Reader 4.0 or later is required. Please install Adobe Acrobat Reader 5.0 from the supplied CD-ROM.
- Before using for the first time, select [Readme] from [Start] >> [All programs (Programs)] >> [Panasonic] >> [DV STUDIO3], and read any supplementary details or updates.

■Installation of DV STUDIO 3.1E-SE

1 Insert the supplied CD-ROM into the personal computer's CD-ROM drive.

2 Select the software to be installed from [Setup Menu].

3 Click [Next].

- After reading the displayed contents, please carry out the installation according to instructions.

4 After the completion of setup, click on [Finish]

- **Installation will be completed.**
- Sample data is installed concurrently with the DV STUDIO 3.1E-SE software.

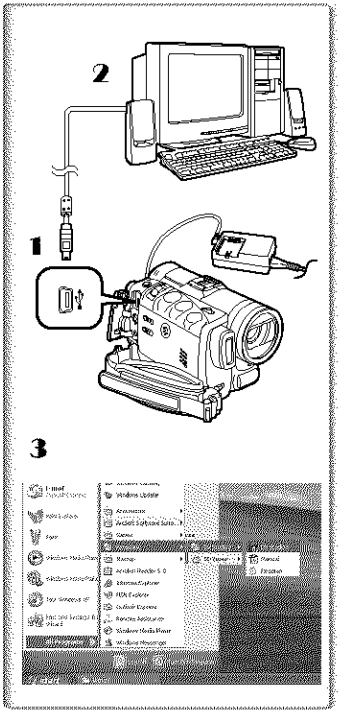

To start DV STUDIO 3.1E-SE

1 Set the Palmcorder to VCR Mode or Camera Mode.

- If you wish to capture data from a tape, set the Palmcorder to VCR Mode and insert the tape.

2 Connect the Palmcorder to the Personal Computer with auxiliary USB Connection Cable.

3 Select [Start] >> [All Programs (Programs)] >> [Panasonic] >> [DV Studio3]>> [DV Studio3].

- If a shortcut icon has been created on the desktop during installation, it is also possible to start by double-clicking on the icon.

Using the G.726 Audio Decoder

G.726 Audio Decoder allows you to listen to MPEG4 sound with Windows Media Player. Install it from enclosed CD-ROM.
In order for the G.726 Audio Decoder to be installed, the hard disk must have at least 16 MB of free space. Before proceeding with installation, check out the amount of free space on the hard disk.

Operating environment

OS:
Microsoft Windows XP Home Edition/Professional
Microsoft Windows 2000 Professional
Microsoft Windows Me (Millennium Edition)
Microsoft Windows 98 Second Edition
Also, the following software must be correctly installed.
DirectX 6 or later (Runtime)
DirectX Media 6 Runtime
Windows Media Player 6.1 or later
Graphic display:
High Color (16 bit) or more
Desktop resolution of 800×600 dots or more
RAM:
32 MB or more
Free hard disk space:
At least 16 MB

Installing the G.726 Audio Decoder

1 Insert supplied CD-ROM into the CD-ROM drive.

- [Setup Menu] ❶ appears.

2 Select the software to be installed from [Setup Menu].

- The set up program starts up.
- Quit all Windows applications.

3 Install it by following the instructions on the screen.

- Carefully read the license agreement on the [Software License Agreement] window, and if you agree click [Yes]. Software is not installed if [No] is clicked.

4 Click [Finish] when the [Setup Complete] Dialog Box appears.

- Finish installing the G.726 Audio Decoder by restarting the computer.

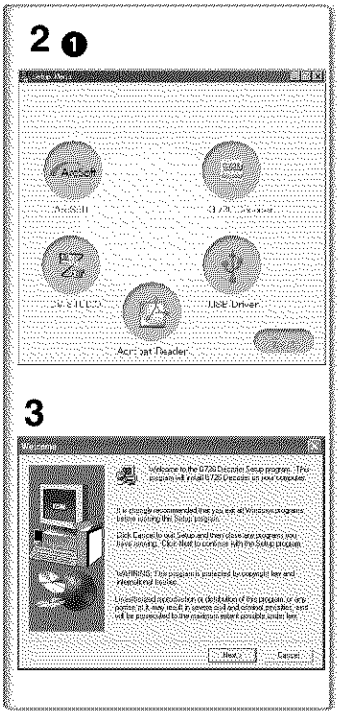

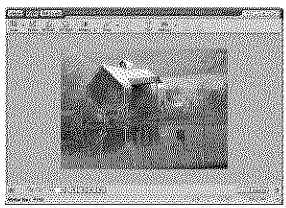

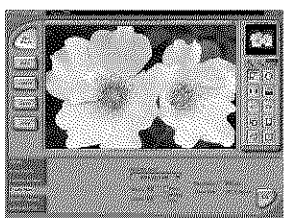

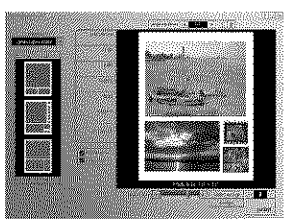

Using the ArcSoft Software

There are 4 types of image editing software in the ArcSoft Software package.

❶ **Panorama Maker 3.0 (Windows, Mac)**
- Easy-to-use photo-stitching program seamlessly combines multiple photos into a single panoramic picture.

❷ **PhotoBase 4.0 (Windows), PhotoBase 2.0 (Mac)**
- Create albums of image, video, audio, and other electronic files for easy viewing, retrieval, and management.

❸ **PhotoImpression 4.0 (Windows, Mac)**
- Easy-to-use photo editing program to edit, enhance, retouch or add special effects to any image. Also offers creative solutions for making greeting cards and calendars.

❹ **PhotoPrinter 4.0 (Windows, Mac)**
- Program to layout images in multiple sizes quickly and effortlessly to create a collage or photo album, all on one page.

■Operating environment

- **For Windows**

OS:
IBM-PC/AT compatible personal computer;
Microsoft Windows XP Home Edition/Professional
Microsoft Windows 2000 Professional
Microsoft Windows Me (Millennium Edition)
Microsoft Windows 98 Second Edition
CPU:
Pentium-based PC or equivalent [❶, ❸, ❹]
Pentium II-based PC or equivalent [❷]
(Pentium II 300MHz or higher recommended)
Graphic display:
High Color (16 bit) or more
Desktop resolution of 800×600 dots or more
*Quick Time and/or VRML viewer needed. [❶]
RAM:
64 MB or more (128 MB or more is recommended)
Free hard disk space:
At least 420 MB
Other requirements:
Mouse

- **For Macintosh**

OS:
Mac OS 8.6 – X
CPU:
Power PC
Graphic display:
High Color (16 bit) or more
Desktop resolution of 800×600 dots or more
RAM: 64 MB or more (128 MB or more is recommended)
Free hard disk space:
At least 300 MB

- This instruction manual describes only the procedures for installation, connection and start-up. Please read the Help messages of your software for how to use the ArcSoft Software Suite.

2

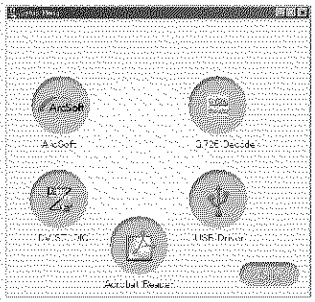

4

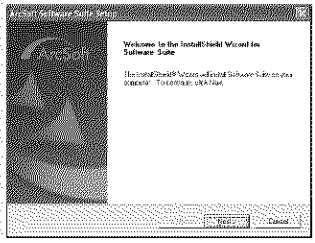

5

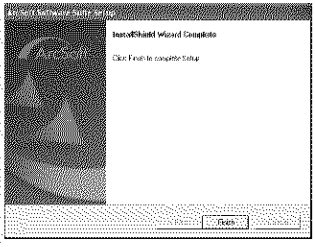

3

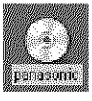

4

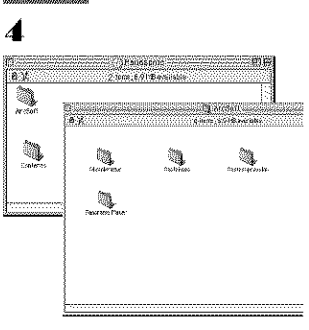

Installation of ArcSoft Software Suite

1 **Insert the supplied CD-ROM into the personal computer's CD-ROM drive.**

2 **Select the software to be installed from [Setup Menu].**

3 **Select the desired language on the [Choose Setup Language] dialogue, and click [OK].**

- **Installation begins.**
- After reading the displayed contents, please carry out the installation according to instructions.
- If a language other than the OS language is selected, the characters may not be presented correctly.

4 **When the component selection screen is displayed, check the software to be installed and click [Next].**

5 **After the completion of setup, click on [Finish]**

- Installation will be completed.

Software Installation (Macintosh)

1 **Turn on Computer and start up Macintosh.**

2 **Insert supplied CD-ROM into the CD-ROM drive.**

3 **Double click the icon of a CD-ROM that appears.**

4 **Double click the software to be installed from [ArcSoft].**

5 **Follow the instructions on the computer screen until the installation is complete.**

To start software in the ArcSoft Software Suite

1 **Select [Start] >> [All Programs (Programs)] >> [ArcSoft Software Suite] >> [ArcSoft Panorama Maker 3.0] (or [ArcSoft PhotoBase 4.0] or [ArcSoft PhotoImpression 4.0] or [ArcSoft PhotoPrinter 4.0]).**

For Information on ArcSoft Software:

TEL: 1-510-440-9901
FAX: 1-510-440-1270
Web Site: www.arcsoft.com
E-mail: support@arcsoft.com

Refer to Help information about application operations and other Error messages.

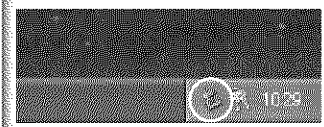

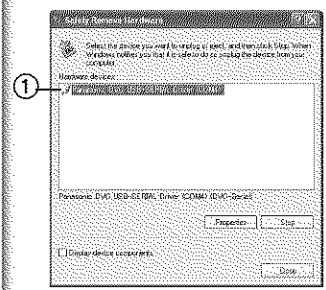

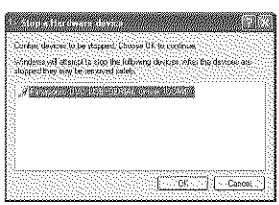

To disconnect USB cable safely

If USB cable is disconnected while computer is on, error dialog box may appear. In such a case click [OK] and close the dialog box. By following the steps below you can disconnect the cable safely.

1 Double click the icon in task tray.
- Hardware disconnect dialog box appears.

2 Select [Panasonic DVC USB-SERIAL Driver] ① and click [Stop].

3 Verify [Panasonic DVC USB-SERIAL Driver] is selected and click [OK].
- Click [OK], and you can safely disconnect the cable.

Note on the driver name ① displayed

The driver name displayed will differ depending on your OS, operating environment and the mode of the Palmcorder.

Windows XP/2000:

(When the Palmcorder is in VCR mode or Camera Mode:)
[Panasonic DVC USB-SERIAL Driver (COM 4)] (The numeral after "COM" will differ depending on the operating environment of your personal computer.)
(When the Palmcorder is in Card Playback Mode:)
[Panasonic DVC USB Driver] or [Panasonic DV DISK Port Driver]

Windows Me:

[Panasonic DVC Port Driver Version 2.0]

- Some OS, such as Windows 98SE, may not show the icon indicating that you may safely disconnect in task tray. (OS may be set not to show) Make sure Palmcorder's [ACCESS] lamp is off and disconnect the cable.

CAUTION:

If you disconnect the USB Cable while the [ACCESS] Lamp is on, it may damage the Card data.

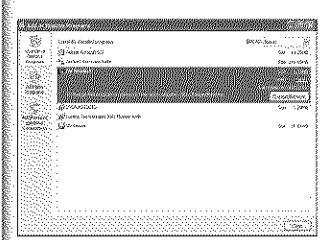

If you no longer need software or driver (Uninstall)

The screens may vary with the type of the OS. (In this manual, explanation is offered with Windows Me screen.)

1 Select [Start] (>> [Settings]) >> [Control Panel], select the software or the driver from [Add/Remove Programs] to uninstall.
- Uninstalling steps may vary depending on the OS. Please refer to the user manual of your OS.

Notes

- Do not disconnect USB Connection Cable while the operation light of Palmcorder is on. It may freeze the software or destroy the data in transfer. Please refer to the user manual of Palmcorder.
- We recommend using the AC adaptor as the power source for the Palmcorder when using USB Connection Kit. Data may be lost if the battery power is lost while transferring data.
- G.726 may not recognize memory card files not created by Palmcorder.
- Do not delete the folders in memory card such as picture folder, DPOF folder, title folder etc. Memory card may not be recognized if folders are deleted.
- When the Palmcorder is switched to the Card Playback Mode while it is connected to the personal computer, "PC ACCESSING" is displayed on the Palmcorder and the operation mode of the Palmcorder cannot be switched. In this case, disconnect the USB Connection Cable. Switch the operation mode of the Palmcorder and reconnect the Cable.
- If the Palmcorder is connected in the Card Playback Mode, the [Removable disc] icon representing the Memory Card drive is displayed in [My Computer].
- When the VCR Mode of the Palmcorder is switched to the Card Playback Mode, a warning message may be displayed. You may simply ignore it.
- When you are using Windows XP or Windows 2000, you may install or uninstall this software after logging ON by setting the user name to Administrator or to a user name having equivalent authority.
- If you use Windows 98SE/Me, the message, "File is not found" may be displayed when the Palmcorder is connected for the first time. Enter the following paths to complete the connection: If the message "MTDV98M1.pdr is not found" is displayed, enter "C:/WINDOWS/system/IOSUBSYS". If the message "MTDV98M1.sys is not found" is displayed, enter "C:/WINDOWS/system32/DRIVERS".

(The paths will differ depending on the environment of your personal computer.)

- When the Palmcorder is connected to the personal computer on Windows 2000, these screens described above may not be displayed.
- If you use Windows 2000 and the Palmcorder is not recognized by the personal computer when the USB Driver is installed, update the USB Driver.
- If you install the USB Driver while the USB Connecting Cable is being connected, or if you don't follow these Operating Instructions, the Palmcorder will not be recognized correctly. In this case, delete the USB Driver from [Device Manager] as described below, uninstall the USB Driver, and re-install it.

  ❶ Set the Palmcorder to VCR Mode or Camera Mode, connect it to the personal computer, and delete [Panasonic DVC USB-SERIAL Driver (COM X)] (or [Panasonic Serial USB Driver]) from [Device Manager].

  ❷ Set the Palmcorder to Card Playback Mode and delete [Panasonic DVC USB Driver] (or [Panasonic DVC USB Driver Version 2.0]) (If you use Windows Me/98SE, also delete [Panasonic DVC Port Driver Version 2.0]).

About the SD Memory Card and MultiMediaCard

SD Memory Card

The SD Memory Card (supplied) is virtually the same size as a MultiMediaCard. It is an external memory card that is available in larger capacities. It has a write protect switch to prevent data writing and card formatting, as well as a copyright protection function.

- SD Logo is a trademark.

MultiMediaCard

The MultiMediaCard is a compact, lightweight and removable external memory card.

- All other company and product names in the operating instructions are trademarks or registered trademarks of their respective corporations.

Files recorded on a SD Memory Card or MultiMediaCard

It may not be possible to play back the files on this Palmcorder recorded on and created by other equipment or vice versa. For this reason, check the compatibility of the equipment in advance.

About the compatibility of the card files

Data files recorded on an "SD Memory Card" or a "MultiMediaCard" by this Palmcorder conform with DCF (Design rule for Camera File system) established by JEITA (Japan Electronics and Information Technology Industries Association).

- If you attempt to play back files recorded with this Palmcorder on other equipment or to play back files recorded with other equipment on this Palmcorder, you may not be able to play them back. Please check the compatibility with the other equipment in advance.

About the folder structure when using the Memory Card in a personal computer

- When a Card with data recorded on it is inserted into a personal computer, folders will be displayed as in the figure.

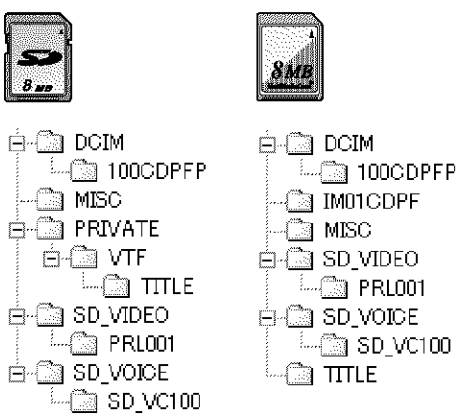

[100CDPFP]: The images (Imga0001.jpg, etc.) in this folder are recorded in the JPEG format.

[MISC]: Files in which DPOF Data has been set to the image are in this folder.

[TITLE]: This contains the data of the original titles (Usr00001.ttl, etc.).

[PRL001]: MPEG4 moving picture is recorded in ASF format (MOL001.ASF etc.). It can be played back with Windows Media Player (ver.6.4 and later). Because of their small size, these files are well suited for transmitting data through telephone lines etc. To play back a moving picture with Windows Media Player, select a file and double click. Necessary software is automatically downloaded and starts playing back. (Internet connection is required). To play back with Mac OS, Windows Media Player for Macintosh is required.

- [DCIM], [IM01CDPF], [PRIVATE], [VTF], [SD_VIDEO], [SD_VOICE] etc. are necessary items in the folder structure. They have nothing to do with actual operations.
- In the Card Mode, the Palmcorder automatically saves file numbers (Imga0001.jpg, etc.) along with the images. The file numbers are recorded with each image as consecutive numbers.
- In the [SD_VC100] folder, the Voice data (MOB001.vm1 etc.) is recorded. It, however, cannot be played back on a Personal Computer.
- The [SD_VOICE] folder and the Voice files in the folder are set as hidden. Depending on the settings of your personal computer, this hidden folder and these hidden files might not appear in Windows Explorer or the "My Computer" screen.
- The memory capacity indicated on the SD Card label corresponds to the total card capacity. Some of this capacity is used to protect and manage the copyright data, and not all capacity is available as a conventional memory for a Palmcorder, Personal Computer or others.
  Capacity that can be used as conventional memory:
  8 MB Card: about 6,800,000 bytes

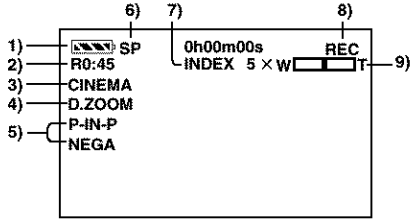

Others

Indications

Various functions and Palmcorder conditions are displayed on the screen.

1) **Remaining Battery Power [▭]**
   - When the battery power becomes low, the indication changes. When the battery is discharged completely, the [▭] ([▭]) Indication flashes.
   - When you are using the AC Adaptor, the [▭] Indication may appear, however, this has no meaning in this case.
2) **Remaining Tape Time [R0:00]**
   - Remaining tape time is indicated in minutes. When it reaches less than 3 minutes, the indication starts flashing.
3) **Cinema Function [CINEMA] (➜ 33)**
4) **Digital Zoom [D.ZOOM] (➜ 32)**
   Playback Zoom [ZOOM 5×] (➜ 46)
5) **Digital Effects Function**
   - MULTI: Multi-Picture Mode **(➜ 42, 49)**
   - P-IN-P: Picture-in-Picture Mode **(➜ 41)**
   - WIPE: Wipe Mode **(➜ 41, 48)**
   - MIX: Mix Mode **(➜ 41, 48)**
   - STROBE: Strobe Mode **(➜ 40, 48)**
   - GAIN UP: Gain up Mode **(➜ 40)**
   - TRAIL: Trailing Effect Mode **(➜ 40, 48)**
   - MOSAIC: Mosaic Mode **(➜ 40, 48)**
   - MIRROR: Mirror Mode **(➜ 40, 48)**
   - NEGA: Negative Mode **(➜ 40, 48)**
   - SEPIA: Sepia Mode **(➜ 40, 48)**
   - B/W: Black & White Mode **(➜ 40, 48)**
   - SOLARI: Solarization Mode **(➜ 40, 48)**
6) **Recording Speed Selector**
   - SP: Standard Play Mode **(➜ 27)**
   - LP: Long Play Mode **(➜ 27)**
7) **Index**
   - For several seconds while index signals are being recorded, the [SCENE INDEX] Indication flashes. **(➜ 47)**

   Search Number [S1] (➜ 47)
   - The figure indicates which number of scenes ahead from the present scene is to be played back.
8) **Tape Run Indications**
   - REC: Recording **(➜ 28)**
   - PAUSE: Recording Paused **(➜ 28)**
   - ▷: Playback/Camera Search in forward direction **(➜ 28, 43)**
   - ◁: Camera Search in reverse direction **(➜ 28)**
   - ❚❚: Still Playback **(➜ 45)**
   - ▷▷: Fast-forward/Cue Playback **(➜ 44)**
   - ◁◁: Rewind/Review Playback **(➜ 43, 44)**
   - ❚▷: Slow Playback in forward direction **(➜ 45)**
   - ◁❚: Slow Playback in reverse direction **(➜ 45)**
   - ❚❚▷: Still Advance Playback in forward direction **(➜ 45)**
   - ◁❚❚: Still Advance Playback in reverse direction **(➜ 45)**
   - ▷▷|: Index Search in forward direction **(➜ 47)**
   - |◁◁: Index Search in reverse direction **(➜ 47)**
   - CHK: Recording Check **(➜ 28)**
   - A.DUB ▷: Audio Dubbing **(➜ 51)**
   - A.DUB ❚❚: Audio Dubbing Pause **(➜ 51)**
   - PHOTO: PhotoShot Mode Recording **(➜ 30)**
   - BLANK: Blank Search **(➜ 46)**
   - R ▷: Repeat Playback **(➜ 44)**
   - 2× ▷▷: Variable Speed Search **(➜ 44)**
9) **Zoom Magnification**
   - When the [W/T] Zoom Lever is pushed up or down, the Zoom Magnification Indication and Zoom Gauge appear. **(➜ 31)**

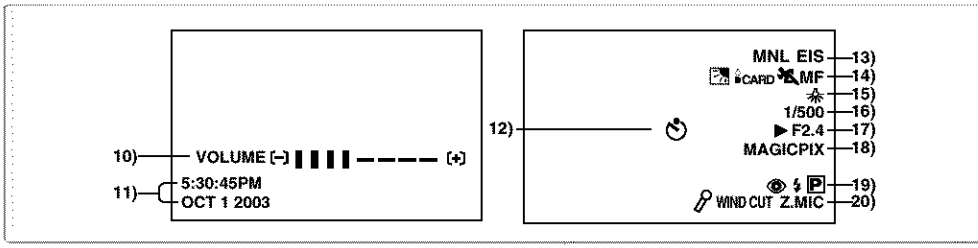

10) Sound Volume

- Use this indication to adjust the volume of playback sound from the built-in speaker or headphones. **(➔ 43)**

11) Date/Time Indication (➔ 27, 84)

12) Self-Timer Recording [ ] (➔ 30)

13) Recording Mode

- AUTO: This appears when Mode Selector Switch is set to [AUTO]. **(➔ 28)**
- MNL: This appears when Mode Selector Switch is set to [MANUAL]. **(➔ 35, 36, 37)**

Electronic Image Stabilizer [EIS] (➔ 33)

Audio Dubbing Input Display [MIC/AV IN] (➔ 51)

Audio Recording Mode [12bit/16bit] (➔ 27)

14) Manual Focus [MF] (➔ 37)

Backlight Mode [ ] (➔ 33)

Low Light Shot [CARD] (➔ 53)

Program AE Mode

- : Sports Mode **(➔ 35)**
- : Portrait Mode **(➔ 35)**
- : Low Light Mode **(➔ 35)**
- : Spotlight Mode **(➔ 35)**
- : Surf & Snow Mode **(➔ 35)**

15) White Balance Mode

- : Last manually adjusted White Balance setting **(➔ 37)**
- : Fluorescent light Mode **(➔ 37)**
- : Outdoor Mode **(➔ 37)**
- : Indoor Mode (recording under incandescent lighting) **(➔ 37)**

16) Shutter Speed [1/500] (➔ 36)

17) Iris Value [F2.4] (F number) (➔ 36)

18) MagicPix Mode [MAGICPIX] (➔ 34)

0Lux MagicPix Mode [0LUX MAGICPIX] (➔ 34)

Tele Macro [T.MACRO] (➔ 31)

Soft Skin Mode [SOFT SKIN] (➔ 34)

19) Progressive PhotoShot™ Mode [P] (➔ 30)

Flash [ ] [+] [−] (➔ 39)

Red Eye Reduction [ ] (➔ 39)

20) Zoom Microphone [Z.MIC] (➔ 31)

Wind Noise Reduction [WIND CUT] (➔ 35)

When connecting the MagicWire Remote Control with Narration Mic to [REMOTE] socket and [TALK] Button is pressed [ ] indication appears (➔ 29)

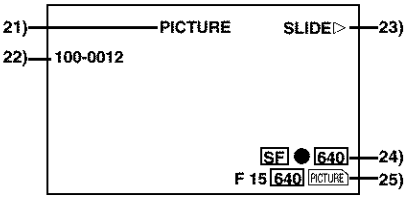

21) File Type Display [PICTURE/MPEG4/VOICE/ TITLE] (➔ 57, 62)

22) Folder-File Number (➔ 58)

23) Card File Indications 1 (CARD PB Mode)

- ●SLIDE▷: Slide Show Playback **(➔ 61)**
- ●SLIDE❚❚: Slide Show Playback Pause **(➔ 61)**
- ●M.SLIDE▷: Manual Slide Show Playback **(➔ 61)**
- ●M.SLIDE❚❚: Manual Slide Show Playback Pause **(➔ 61)**

24) Card File Indications 2 (CARD PB Mode)

- **●Image size [640/1280] (➔ 58)**
  When you playback a scene recorded on a Palmcorder with a picture size specification different from the one stated above, the following indications should be displayed. If the size of the picture is from 640 pixels to 800 horizontal pixels, the [640] Indication will be displayed; if picture size is 640 pixels or lower, the scene should be displayed without any indication of picture size.
  - ● 1280: [1280×960] Image size
  - ● 640: [640×480] Image size
  - ● SVGA: From 800 to 1024 pixels
  - ● XGA: From 1024 to 1280 pixels
  - ● SXGA: From 1280 to 1600 pixels
  - ● UXGA: From 1600 to 2048 pixels
  - ● QXGA: Over 2048
- **●Number set DPOF [00] (➔ 66)**

DPOF setting & Slide Show

- ● (White): DPOF Setting completed (set to 1 or more picture) **(➔ 66)**
- ● (Green): Slide Show Settings completed **(➔ 61)**
- ● (Blue): DPOF Setting (set to 1 or more picture)/Slide Show Settings both completed **(➔ 61, 66)**

25) Card File Indications 3 (Camera Mode)

- **●MPEG4 Picture Quality [N, F, SF]**
- **●Card PhotoShot picture quality [F/N/E] (➔ 54)**
  (Card PhotoShot Recording) [F] is Fine, [N] is Normal, [E] is Economy in abbreviated terms.
- **●Remaining number of Card PhotoShot Pictures [000] (➔ 53)**
- **●Recording in Card PhotoShot [PICTURE] (red) (➔ 53)**
- **●Recording the Moving Picture [MPEG4] (red) (➔ 56)**
- **●Recording Voice [VOICE] (red) (➔ 55)**
- **●Memory Card is not inserted [PICTURE (MPEG4, VOICE)] (flashing in red) (➔ 52)**
- **●Card PhotoShot is ready to record [PICTURE (MPEG4, VOICE)] (cyan) (➔ 53)**
- **●File number [No.000] (➔ 58)**
- **●Lock setting [O-] (➔ 64)**

■Changing the Counter Display Mode

By changing [C.DISPLAY] on the [DISPLAY SETUP] Sub-Menu, you can change the Counter Display Mode to Tape Counter Indication (0:00.00), Memory Counter Indication (M0:00.00), and Time Code Indication (0h00m00s00f).

- You can also press the [COUNTER] Button of the Remote Controller repeatedly to change the Counter Indication.

■Displaying Date/Time Indication

To display Date/Time Indication, set the appropriate Date/Time in [DATE/TIME] on the [DISPLAY SETUP] Sub-Menu.

- You can also press the [DATE/TIME] Button on the Remote Controller repeatedly to display or change the Date/Time Indication.

■Changing the Display Mode

By changing [DISPLAY] on the [DISPLAY SETUP] Sub-Menu, Counter Display Mode changes to All Function Display, Partial Display, and Minimum Display.

Initializing the Modes

You can change the Menu settings back to the shipping condition.

1 Set [CAMERA FUNCTIONS] >> [OTHER FUNCTIONS2] >> [INITIAL SET] >> [YES].

- The initializing takes a while.
- After the initializing is completed, the [COMPLETED] Indication appears with beeps.
- Initializing will not erase the clock setting that has been adjusted.

Warning/Alarm Indications

If any one of the following indications lights up or flashes, please check the condition of the Palmcorder.

EJECT TAPE: After the [DEW DETECTED] Indication appears, eject the Cassette.

CHECK REC TAB : The erasure prevention tab on the inserted Cassette is open (that is, set to [SAVE]).
When you are attempting to do audio dubbing on the unrecorded (blank) portion of the tape, or you are attempting to do dubbing on the Cassette whose tab is set at [SAVE]. **(➔ 51, 68)**

TAPE NOT INSERTED: No Cassette is inserted. **(➔ 20)**

LOW BATTERY MODE: The Battery is low. Recharge it. **(➔ 18)**

: The internal lithium battery is low. **(➔ 27)**

END/TAPE END: The tape ended during recording.

REMOTE/ CHECK REMOTE MODE: Wrong Remote Controller Mode has been selected. **(➔ 17)**

CANNOT REC LP-MODE: Because the original recording was done in LP Mode, audio dubbing cannot be performed. **(➔ 51)**

INCOMPATIBLE DATA: This Cassette is incompatible or contains copy-guard.
Because the medium is protected by a copy guard, images cannot be recorded correctly.

: If this Indication appears, return the LCD Monitor to the original position in order to check the specific content of the Warning/Alarm Indication.

AV INPUT RECORDING: When you are attempting to record on the Memory Card during dubbing **(➔ 67)** on the Cassette.

NO CARD: There is no Memory Card inserted.

PLEASE WAIT: When reading of the Memory Card (playback, format, when using the Multi-Picture Function). **(➔ 57, 66)**

CARD ERROR: The Memory Card is not compatible with the Palmcorder.

CHECK SELECT SWITCH: You are attempting to record a tape in VCR Mode, with the combination of modes set with the [TAPE/CARD/CARD MODE] Selector, this Indication appears. Pressing the Recording Start/Stop Button with [PICTURE] in Camera Mode. Pressing the PhotoShot Button with [MPEG4] or [VOICE] in Camera Mode. Pressing the Recording Start/Stop Button with [TAPE] and [PICTURE] in Card Playback Mode. Pressing the PhotoShot Button with [PICTURE] in Card Playback Mode.

FILE LOCKED: When you are attempting to delete a locked picture. The locked picture cannot be deleted.

WRITE PROTECTED: When you are attempting to write the data on an SD Memory Card whose write protection switch is set at [LOCK].

NO PICTURE: There are no pictures in the Memory Card.

NO MPEG4 DATA: There are no moving pictures in the Memory Card.

NO VOICE DATA: There is no voice data in the Memory Card.

NO TITLE: There are no titles in the Memory Card.

NO SPACE LEFT: Card does not have sufficient memory remaining. Select Card Mode and delete unnecessary files.

X: You are attempting to play back data which is not compatible with this Palmcorder. **(➔ 57)**

DEW DETECTED: Condensation has occurred. **(➔ 94)**

✪ NEED HEAD CLEANING: The video heads are dirty. **(➔ 94)**

PUSH THE RESET SWITCH: Irregular mechanism is detected. Press the [RESET] Button.This may solve the problem. You are attempting to record to a Memory Card formatted with other equipment (like a Personal Computer). Format the Memory Card with this equipment.

NEEDS TO BE SERVICED: Disconnect the power supply and request service.

CONNECT USB CABLE: The [WEB CAMERA] on the [CAMERA SETUP] Sub-Menu of the [CAMERA FUNCTIONS] Main-Menu is set to [ON] with USB Cable unconnected. Connect the USB Cable to the Palmcorder and the Personal Computer.

DISCONNECT USB CABLE: You are pressing the Recording Start/Stop Button, the [PHOTO SHOT] Button or the [TITLE] Button in the WEB CAMERA Mode. You are pressing the [TITLE] Button in Camera Mode or VCR Mode with a USB Cable connected. You are attempting to record on a Card with a USB Cable connected.

CANCEL WEB CAMERA MODE: It is not possible to operate the [OFF/ON/MODE] Switch in the WEB CAMERA Mode.

Notes & Precautions

■ Alarm Sounds (➔ 24)

When [BEEP SOUND] on the [OTHER FUNCTIONS1] Sub-Menu on the [CAMERA FUNCTIONS] Main-Menu is set to [ON], confirmation/alarm beeps are issued as follows.

1 Beep
- When you start recording
- When you switch the [OFF/ON/MODE] Switch from [OFF] to [ON]

2 Beeps
- When you pause recording

2 Beeps for 4 times
- If you perform a wrong operation before or during recording

■ Inserting/Ejecting the Cassette (➔ 20)

- In the case of using a previously recorded Cassette, you can use the Camera Search Function to find the position where you want to continue recording.
- If a new Cassette is inserted, rewind to the beginning of the tape before starting to record.
- When inserting the cassette, make sure it faces in the right direction and then push it in until it stops.
- When the Cassette Holder is in action, do not touch anything except the [PUSH] mark.
- When closing the Cassette Compartment Cover, do not get anything caught in the cover, such as a cable of an optional stereo microphone.

■ Recording Check (➔ 28)

- For recording check, the Palmcorder must be the same as the recording speed Modes (SP/LP) used for the recording. Otherwise the playback images will be distorted.

■Camera Search (→ 28)

- In Camera Search Mode, images may contain mosaic-like noise patterns. This is a phenomenon that is characteristic of digital video and not a malfunction.
- If the recording speed Modes (SP/LP) of previous recording and new recording are different, playback images may be distorted.

■Quick Start (→ 29)

- During the Quick Start Standby Mode, a minute amount of electricity is consumed.
- This Function is not activated in the following cases even if the Quick Start Recording Lamp lights:
  - A tape is not inserted, while the Tape Mode is set.
  - A Card is not inserted, while the Card Mode is set.
- In the following cases, Quick Start is temporarily cancelled when the Quick Start Mode is set. Set the Camera Mode again, and the Quick Start Mode will be restored.
  - Set to the VCR Mode or Card Playback Mode
  - The Battery is replaced
- If the [QUICK START] Button is pressed and held for approximately 2 seconds during the Quick Start Standby Mode, the Lamp will go off and the Palmcorder will turn off.
- If the Palmcorder is not operated for approximately 30 minutes after the Quick Start Recording Lamp lights, the Lamp will go off and the Palmcorder will turn off.
- In the Automatic White Balance Mode, the color may be recorded unnaturally at the beginning of the recording.

■Self-timer Recording (→ 30)

- When [BEEP SOUND] on the [OTHER FUNCTIONS1] Sub-Menu on the [CAMERA FUNCTIONS] Main-Menu is set to [ON], the beep sound will be emitted along with the Recording Lamp flashing in the Self-timer Standby Mode.
- By operating the [OFF/ON/MODE] Switch, the Self-timer Standby Mode is cancelled.

■Progressive PhotoShot™ Function (→ 30)

- The still pictures are recorded at a slightly rewound point from where you press the [PHOTO SHOT] Button.
- When you change to the still picture Mode, you will hear a click. This is the sound of the iris closing and not an indication of malfunction.
- If you record still pictures in Progressive PhotoShot™ Mode when your Palmcorder is set to Program AE, the brightness of the images may vary.
- The picture may be blurred when recording a scene with many horizontal lines or fine patterns.
- Using the MagicPix Function cancels the Progressive PhotoShot™ Function.
- The [P] Indication flashes and you cannot use the Progressive Photoshot Function when [FLASH] is set to [OFF] and [PROGRESSIVE] is set to [AUTO] and the surrounding luminousity is not enough.

About [PROGRESSIVE] Setting

- When the [P] Indication is displayed, you can use the Progressive PhotoShot™ Function.

When [PROGRESSIVE] is set to [ON]:

You can use the Progressive PhotoShot™ Function at any time. In this case, however, the following functions are disabled.

- [EFFECT1] Digital Effect Modes
- Digital Zoom [D.ZOOM]
- 1/750 or faster shutter speed

When [PROGRESSIVE] is set to [AUTO]:

You cannot use the Progressive PhotoShot™ Function in the following circumstances.

- When the zoom magnification is approximately 10× or higher
- When the shutter speed is 1/750 or faster
- When [EFFECT1] is set to [WIPE], [MIX], [STROBE], [GAIN UP], [TRAIL], [MOSAIC], [MIRROR]
- When the pictures are displayed on a Multi screen

■Zoom In/Out Functions (→ 31)

- By pressing the [W/T] zoom lever to [W] or to [T] in Recording Pause Mode, you can zoom 1-10× at the maximum speed of 1.8 seconds.
- During recording, you can zoom 1-10× in as short a time as approximately 2.8 seconds.
- During considerably fast zooming, the image may become out of focus temporarily.
- When you are using a high amount of zoom, a sharper focus is achieved if the recording subject is approximately 4 feet (1.2 m) or more away from the Palmcorder.

Tele-Macro Function

- The Tele-Macro Function cannot be started during recording.
- When the [D.ZOOM] is set to [20×] or [500×], the Tele-Macro Function with the magnification greater than 10× is available.
- If a sharper focus cannot be achieved, adjust the focus manually.

In the following cases, the Tele-Macro Function is cancelled.

- The zoom magnification becomes lower than 10×.
- Operating the [OFF/ON/MODE] Switch.

Electronic Image Stabilizer Function (→ 33)

- Under conditions of dim lighting, the Electronic Image Stabilizer Function will not operate correctly. In such a case, the [EIS] Indication will flash.
- Under fluorescent lighting, image brightness may change or colors may not look natural.
- After-images may appear.
- We recommend that you turn off the Image Stabilizer function when a Tripod is in use.
- By setting [EFFECT1] on the [DIGITAL EFFECT] Sub-Menu to [GAIN UP], you can disable the Image Stabilizer function. In this Case, the [EIS] Indication flashes.
- The Image Stabilizer Function does not operate when using MagicPix. In this case, the [EIS] Indication flashes.
- Within the digital zoom range, or when recording with a conversion lens attached, the Image Stabilizer Function may not work effectively.

Cinema Function (→ 33)

- Using the Cinema Function does not widen the recording angle.
- If you play back tape recorded in Cinema Mode on a wide-screen (16:9) format TV, playback size is automatically adjusted to fit the TV screen format. Please refer to the TV's operating instructions for details.
- When images are displayed on a TV screen, the Date/Time Indication may be erased in some cases.
- Depending on the TV, the picture quality may be deteriorated.
- The Cinema Mode is cancelled when a Title is displayed.
- Using the Cinema Mode deactivates [MULTI] and [P-IN-P] of [EFFECT1].
- Depending on the software in use, the imported Cinema picture may not be displayed correctly.

MagicPix Function (→ 34)

- In a bright place, such as the outdoors, the recorded picture may become washed out.
- In a dark place, the recorded picture is presented in a time-lapse-like manner.
- Focusing must be adjusted manually.
- Use this function only in situations where there is limited light. Do not use it in brightly lit places or aim at the sun. The Palmcorder can be seriously damaged.
- The Progressive PhotoShot™ Function is automatically turned off.
- The Continuous PhotoShot Function cannot be used.
- White Balance cannot be set.
- The shutter speed cannot be adjusted.
- The Iris cannot be adjusted.
- The Program AE or Digital Effect Modes in [EFFECT 1] cannot be set.
- The Image Stabilizer does not function.
- When recording with the MagicPix Function, using a tripod is recommended.
- MagicPix Function makes the signal charging time of CCD up to 30 times longer than usual, so that dark scenes that are invisible to the naked eye can be recorded brightly. For this reason, bright dots may be seen, but this is not a malfunction.

Program AE (→ 35)

- If any of the Program AE Modes are selected, you cannot adjust the shutter speed or iris.
- You cannot use Sports Mode, Portrait Mode or Low Light Mode with Gain Up Mode [GAIN UP].
- When using Sports Mode, Portrait Mode or Low-Light Mode, using the MagicPix Function cancels this mode.

Sports Mode

- During normal playback, the image movement may not appear smooth.
- Because the color and brightness of the playback image may change, avoid recording under fluorescent light, mercury light, or sodium light.
- If you record a subject illuminated with strong light or a highly reflective subject, vertical lines of light may appear.
- If the light is insufficient, the [ ] Indication flashes.

Sports Mode/Portrait Mode

- If you record a still picture in Progressive PhotoShot™ Mode, the brightness of the recorded still picture may become unstable.
- If these modes are used for indoor recording, playback images may flicker.

Low Light Mode

- Extremely dark scenes may not be able to be made brighter to a satisfactory degree.

Spotlight Mode

- With this Mode, recorded images may turn out to be extremely dark.
- If the recording subject is extremely bright, its recorded image may turn out to be washed out.

Surf & Snow Mode

- If the subject is extremely bright, its recorded image may turn out to be washed out.

Manual Shutter Speed Adjustment (→ 36)

- You may see vertical lines of light in the playback image of a brightly shining subject or highly reflective subject.
- During Normal Playback, transition from one scene to another may not appear smooth.
- Because the color and brightness of the playback image may become unstable, avoid recording under fluorescent light, mercury light, or sodium light.
- If you are using either Gain up Mode, Program AE Mode or MagicPix Function, you cannot adjust the shutter speed. If the shutter speed is adjusted manually, this setting will be cancelled.

Manual Iris Adjustment (→ 36)

- Depending on zoom magnification, the iris value may not be displayed correctly.
- If you are using Program AE Mode you cannot adjust the iris.
- If you attempt to adjust the Shutter Speed after setting the Iris, the value set for the Iris will be cancelled.

White Balance (→ 37)

In the following cases, you cannot change White Balance:

- When you set [EFFECT1] of [DIGITAL EFFECT] Sub-Menu on the [CAMERA FUNCTIONS] Main-Menu to [GAIN UP] or [EFFECT2] to [SEPIA] or to [B/W].
- When you set the Zoom to 10× or higher.
- During Digital Still Picture Mode.
- When you display a Menu.
- When you use the MagicPix Function.

In the following cases, the [▣] indication flashes:

- The flashing indicates that the previously adjusted White Balance setting is still kept. This setting will be kept until White Balance is adjusted again.
- You may not be able to achieve correct White Balance adjustment manually under weak illumination.

Using the Built-in Flash (→ 39)

- The available range of the Flash is approximately 3 to 7.5 feet (1 to 2.5 meters) in a dark place. Pictures will appear dark when they are recorded using the Flash at distances greater than 7.5 feet (2.5 meters).
- When the [P-IN-P] Button is pressed or Title is created, Flash is also lit.
- When the [FLASH] on the [RECORDING SETUP] Sub-Menu is set to [AUTO] and the Shutter Speed, Iris or Gain is adjusted, the Indication ([ϟ], [ϟ+] or [ϟ−] etc.) may disappear and the Flash may not be lit.
- Using the Flash fixes the shutter speed of 1/750 s or faster to 1/500.
- Using the Flash is not possible during the Continuous Photoshot recording, the MagicPix Function and the MPEG4 Recording.
- The picture may become out of focus in a dark place. In this case, adjust the focus manually.
- The Palmcorder, even when its Flash has been turned off, automatically determines whether the flash light is necessary or not by detecting the ambient brightness. (If it determines that the flash light is necessary, the [ϟ] Indication is displayed in yellow.)
- When the [ϟ], [ϟ+] or [ϟ−] Indication is displayed, the Flash can be lit. (When flashing, the Flash is charging.)
- Charging the Flash takes 4 seconds maximum after lit.
- In the following cases, using the Flash is not possible:
  - MagicPix Function **(→ 34)**
  - RapidFire Consecutive Photoshot **(→ 54)**
  - MPEG4 Recording **(→ 56)**
- Object of recording may appear dark if Flash is lit in front of white background.

Digital Effect Functions (Camera Mode) (→ 40)

- It is not possible to use [MULTI], [P-IN-P], [WIPE], [MIX] or [TRAIL] of [EFFECT1] together with the digital modes of [EFFECT2] on the [DIGITAL EFFECT] Sub-Menu.
- If you set [EFFECT1] on the [DIGITAL EFFECT] Sub-Menu to [GAIN UP], you need to adjust the focus manually. However, you cannot adjust the shutter speed and cannot select White Balance.
- You cannot use Sports Mode, Portrait Mode or Low Light Mode with Gain up Mode [GAIN UP].
- If [EFFECT2] on the [DIGITAL EFFECT] Sub-Menu is set to [B/W] or [SEPIA], the selected White Balance Mode cannot be changed.
- Setting the Cinema Mode cancels the Picture-in Picture Mode and the Multi-Picture Mode.

In the following cases, using the [EFFECT1] on the [DIGITAL EFFECT] Sub-Menu is not possible.

- When [PROGRESSIVE] is set to [ON]
- When the MagicPix Mode is set

In the following cases, using the Digital Effect Function is not possible.

- Card Mode
- Title In

Wipe Mode and Mix Mode (→ 41)

If either one of the following operations is carried out, stored images will be erased, and Wipe and Mix Functions cannot be used.

- Use the Camera Search Function.
- Press the [STILL] Button.
- Switch the [TAPE/CARD/CARD MODE] Selector.

P-IN-P Mode (→ 41)

- If the Palmcorder power is turned off, the smaller picture will disappear.
- A title cannot be inserted into the smaller picture.

Multi-Picture Mode (→ 42)

- When [PROGRESSIVE] on the [CAMERA SETUP] Sub-Menu is [ON], Multi-Picture Mode cannot be used.
- If the [MULTI] Button is pressed while self-recording Mirror mode **(→ 29)** is used, the still picture is displayed from the upper right corner of the screen, but, in reality, the picture is recorded from the upper left corner as usual.
- The quality of images recorded in Multi Mode deteriorates slightly.
- Multi Mode cannot be used in still picture mode.
- The top and bottom of the Multi pictures will be cut off slightly.

Listening to Playback Sound Through Headphones

If you want to listen to the playback sound of a tape through headphones, set [AV JACK] on the [AV IN/OUT SETUP] Sub-Menu to [OUT/PHONES] and connect the headphones to the [PHONES] Jack on this Palmcorder. In this case, no sound (including warning sounds and shutter sounds) will be reproduced through the built-in speaker of the Palmcorder. When the A/V Cable is inserted into the AV Jack, the internal speaker works.

Selecting the Sound during Playback (→ 43, 51)

You can select the sound by using the [AUDIO OUT] on the [PLAYBACK FUNCTIONS] Sub-Menu.

STEREO: Stereo Sound (main sound and subsound)
L: Left channel sound (main sound)
R: Right channel sound (sub sound)

- If you dub a tape recorded at the [12bit] selected as the [AUDIO REC] setting, playback sound becomes stereo sound regardless of whether [12bit AUDIO] is set to [MIX] or to [AUDIO OUT].

Playback Zoom Functions (→ 46)

- You cannot adjust volume with the Remote Controller in Playback Zoom Mode.
- If you turn off the Palmcorder, or if you switch from VCR Mode to Camera Mode, Playback Zoom Mode is automatically cancelled.
- Even if Playback Zoom Functions are being used, images that are output from the DV Terminal or Digital Still Picture Terminal are not enlarged.
- As you enlarge an image, the quality of image suffers.
- During the Playback Zoom Function, the Variable Speed Search Function cannot be used with the Remote Controller.

Index Search Functions (→ 47)

- Index Search may not be possible at the beginning of tape.
- Because PhotoShot Index Signals are not recorded on still pictures recorded in Continuous PhotoShot Mode, the PhotoShot Index Search Function cannot be used for these still pictures.
- Scene Index Search may not function properly if the interval between 2 scene index signals is shorter than 1 minute.
- For the still pictures taken in the Continuous PhotoShot Mode or Digital Still Picture Mode, PhotoShot index signals are not recorded.

■Playback Digital Effect Functions (➔ 48)

- Revised signals of images to which digital effects are added during playback cannot be output from the DV Terminal or Digital Still Picture Terminal.
- You cannot use the Wipe Function or Mix Function while playing back the non-recorded portion of tape.

Multi-Picture Mode (VCR Mode) (➔ 49)

- The quality of Multi images deteriorates slightly.
- Playback multi-mode screens cannot be output through DV Terminal or Digital Still Picture Terminal.
- If there is input from the DV Terminal, a multi screen cannot be created.
- When signals are input from S-Video Input/Output Jack or Audio-Video Input/Output Jack, a multi screen cannot be re-displayed.
- Signals input from S-Video Input/Output Jack or Audio-Video Input/Output Jack cannot be displayed on a multi screen.
- If you switch the Palmcorder from the Index Multi-Picture Mode over to the Camera Mode, the setting of [SCAN MODE] on the [MULTI-PICTURES] Sub-Menu of the [CAMERA FUNCTIONS] Main-Menu is automatically set to [STROBE].

■Audio Dubbing (➔ 51)

- The blank section of a tape cannot be dubbed.
- Sounds sent through the DV Terminal cannot be dubbed.
- If a tape has a non-recorded portion when the tape is dubbed, images and sounds may be disturbed when this portion of the tape is played back.
- If you set the tape counter back to 0 at the position where you want to stop Audio Dubbing so as to make it possible to use the Memory Stop Function **(➔ 98)**, Audio Dubbing is terminated automatically when the tape reaches this position.
- In the case of importing data recorded with Audio Dubbing to a Computer using the Computer's software program, only the original sound (ST1) may be imported, depending on the software program.

Microphone Jack

When audio dubbing is carried out through an external microphone or audio equipment, connect it to the [MIC] Jack. In this case, the built-in microphone of the Palmcorder will be turned off.

■Recording on a Card (➔ 52 – 56)

- The following functions are disabled:
  - Image Stabilizer **(➔ 33)**
  - Cinema function **(➔ 33)**
  - MagicPix functions **(➔ 34)**
- Do not touch the connector terminal located on the back of the card.
- Wide images cannot be recorded on the Memory Card.
- A card that was formatted with this Palmcorder may not be usable in other equipment. If this happens, please format the card with the equipment with which the card is to be used. Before proceeding with this operation, we suggest that you take the precautionary measure of storing important images in your personal computer.
- In the Card PhotoShot mode, the Palmcorder automatically saves the file numbers (100-0012, etc.) along with the pictures. A file number is recorded with each picture as a running number.
- If the [TAPE/CARD/CARD MODE] Selector is set to [CARD], the Palmcorder is automatically turned off when you leave it for about 5 minutes without performing any PhotoShot recording.
- When the [TAPE/CARD/CARD MODE] Selector is set to [CARD], you cannot record to the Tape.
- During automatic copying tape pictures onto a Card, the number of pictures that can still be recorded on the Card is displayed. When it becomes [0], the Tape is set to the Recording Pause Mode.
- Pictures with wide-screen format signals cannot be copied.

Card PhotoShot (➔ 53)

- Sound cannot be recorded.
- The Progressive Function is set to [ON].
- Even if the [SHTR EFFECT] is set to [ON], the Shutter Effect cannot be recorded on the picture.
- The shutter speed ranges from 1/30-1/500.
- When the color of the screen changes or blurs, adjust the shutter speed manually to 1/60 or 1/100.
- Mega-pixel images cannot be recorded on a cassette as a Mega-pixel picture.
- A Card formatted with other equipment (like a Personal Computer) might be unusable or it might take more time for recording. We recommend that you use this equipment to format it.
- The file format supported by this Palmcorder is JPEG. (Not all the JPEG formatted files will be played back.)
- It may not be possible to play back a mega-pixel still-picture recorded by this Palmcorder with another Palmcorder.

The following functions are not possible.

- Zoom Microphone Function **(➔ 31)**
- Digital Zoom **(➔ 32)**
- Digital Effects/Functions **(➔ 40)**
- Title functions (When in Mega-pixel mode only) **(➔ 62)**

Recording to a Card from other equipment (➔ 54)

If you set the [TAPE/CARD/CARD MODE] Selector to [CARD], you can use the Card PhotoShot Function for externally input signals. (Not during recording.)

- Black streaks may appear at the four edges of the image.
- When the [PHOTO SHOT] Button is pressed, the image may seem to move backward momentarily, but this does not affect the recording.
- If the [VOICE] Indication is displayed, recording to a Card is not possible.
- While recording with analog input, a Card PhotoShot Function cannot be used.

RapidFire Consecutive Photoshot (➔ 54)

- When the [BURST MODE] is set to [H], the [PROGRESSIVE] is automatically set to [OFF], and when [L], the [PROGRESSIVE] is set to [ON].
- One more still picture may be recorded after you release the [PHOTO SHOT] Button.
- When the [BURST MODE] is set to [H], the screen does not become still for each frame.
- The RapidFire Consecutive Photoshot and Title Function cannot be used simultaneously.
- When the [SELF TIMER] is set to [ON], the Palmcorder records the maximum number of pictures recordable depending on the [BURST MODE] setting.

Voice (Voice Recording Function) (➔ 55)

- [PHOTO SHOT] Button does not operate.
- The sound is recorded in monaural, that is, mixed [L] and [R] of the stereo sound.
- The continuous recording time for voice depends on the capacity of the memory card. (24 hours, max.)
- More than 100 hours of remaining time is indicated as [R:99h59m].

Recording Moving Pictures (MPEG4) (➔ 56)

- The file format supported by this Palmcorder is ASF. (Not all the ASF formatted files will be played back.)
- [PHOTO SHOT] Button does not operate.
- More than 100 hours of remaining time is indicated as [R:99h59m].
- When Remaining Time Indication becomes [R:0h00m], [NO SPACE LEFT] Indication appears. Recording may not be started.
- The shutter speed is adjustable within the range of 1/60 to 1/500 while recording moving pictures (MPEG4).
- When the color of the screen changes or blurs, adjust the shutter speed manually to 1/60 or 1/100.
- The picture size of the moving picture (MPEG4) is set to be:
  [SUPERFINE]: 320×240 (QVGA)
  [FINE]: 176×144 (QCIF)
  [NORMAL]: 176×144 (QCIF)
- When attaching to email, we recommend the file size to be less than 1MB.
  [SUPERFINE]: approximately 15 seconds
  [FINE]: approximately 20 seconds
  [NORMAL]: approximately 1 minute
- The following functions are disabled.
  - Self-timer **(➔ 30)**
  - Zoom Microphone Function **(➔ 31)**
  - Digital Zoom **(➔ 32)**
  - Fade In/Out Function **(➔ 32)**
  - Digital Effect Functions **(➔ 40)**
  - Title In/Creation **(➔ 62)**
- The sound is recorded in monaural, that is, mixed [L] and [R] of the stereo sound.

Card Playback (→ 57)

- If a blank (nothing recorded) Card is played, the screen becomes white and the [NO PICTURE], [NO MPEG4 DATA] or [NO VOICE DATA] Indication appears depending on the mode selected.
- If you attempt to play back if file recorded in a different format or if file data is defective, the [×] Indication and the [CARD ERROR] Indication could appear as a warning.
- When the pictures recorded by another Palmcorder are played back with this Palmcorder, the size of the pictures may be different from the recorded size.
- This Palmcorder can also play back the Mega-Pixel still pictures up to 2560×1920 size recorded with the other equipment. However it takes longer than usual time, and the picture may not be playable.
- When playing back a nonstandardized file, the Folder-File Number may not be displayed.
- When playing back the MPEG4 moving picture with fast moving subject or zooming operation, the image seems to stop momentarily, or a mosaic like pattern may appear. This is not a malfunction.
- MPEG4 data or Voice data will not be output from DV Terminal.
- MPEG4 data cannot perform Cue/Review Playback, Slow Motion Playback (forward direction and reverse direction), Still Advance Playback (forward direction and reverse direction) or Jog Playback.
- During automatic copying of tape pictures onto a card, the remaining number of pictures that can still be recorded on the Card is displayed. When it becomes [0], the tape is set to the Recording Pause Mode.
- For the MPEG4 moving pictures recorded on a camera other than this camera, "×" may be displayed when they are played back. If the [▶] Button is pressed in this case, "▷" will be displayed for a few seconds and the next image will be displayed.
- For the still images recorded on the camera other this camera, the mega-pixel image size may be displayed.
- If an MPEG4 motion picture is played continuously for a long time, the playback may stop in the midway and the Palmcorder may freeze while a still picture is being displayed. If this happens, press the [RESET] Button.
- When performing Cue or Review Playback of voice data, the Playback elapsed time may not correspond to the actual recording time of the sound.
- When playing back an MPEG4 or voice data recorded by other equipment, a part of the playback elapsed time may be indicated as [--].

Voice Power Save (→ 24)

- Voice Power Save Function automatically shuts off the monitor to reduce the power consumption when no operation is being performed in the Voice Recording Mode. When [VOICE POWER SAVE] on the [OTHER FUNCTIONS1] Sub-Menu on the [CAMERA FUNCTIONS] Main-Menu, or on the [OTHER FUNCTIONS] Sub-Menu on the [CARD FUNCTIONS] Main-Menu, is set to [ON], the power save function is activated, and the screen turns off in a few seconds after operations, such as play or recording, are performed.
- The Voice Power Saving Function is cancelled when any operation is performed.
- Do not forget to turn off the power.

Copying Pictures from a Memory Card to a Cassette (→ 60)

- When recording the Card Image on a Tape, its size is transformed into 720×576 according to the DV format.
- If you attempt to record a still picture with a large image size on a Tape, there may be a reduction in the quality of the image.
- When recording the Card Images on a Tape, a PhotoShot index signal is automatically recorded with a picture.
- Even if you edit the Slide Show, it is not applied to the order in copying the pictures.
- Moving Picture (MPEG4) and Voice data cannot be recorded from a Card to tape.

Slide Show (→ 61)

- The playback time can be set from 7 to 99 seconds for [QXGA] and [UXGA] sized pictures, and from 5 to 99 seconds for other sizes.
- Perform the Slide Show Settings with your own Palmcorder.
- Depending on the File size, playback may take longer than the set time.
- When performing the preset Slide Show after the Titles are displayed, the Titles disappear.

Title Functions (→ 62, 63)

- Regardless of the [PICTURE SIZE] setting, the size of the created pictures is [640×480].
- If the [PICTURE SIZE] is set to [1280×960] and [TAPE/CARD/CARD MODE] Selector is set to [CARD], title cannot be created.
- When the [TAPE/CARD/CARD MODE] Selector is set to [MPEG4] or [VOICE], Title Creation Function is not possible.
- Even if the contrast of the Title is adjusted, the portions where there is little difference between light and dark and where the boundary between light and dark is unclear may not appear.
- The Title may not appear clear if something small is used for it.
- If you create an original title, the number of pictures that can be recorded on the Memory Card decreases.
- If the number of pictures that can be recorded on the Memory Card is small, you may not be able to create an original title in some cases.
- When a title is displayed in VCR Mode, the title is not output from the DV Terminal or Digital Still Picture Terminal.
- When the [TAPE/CARD/CARD MODE] Selector is set to [MPEG4] or [VOICE], Title In Function is not possible.

Formatting a Memory Card (→ 66)

- Even if files are locked, the files will be deleted when the Memory Card is formatted.
- It may not be possible to use a Card which was formatted using this Palmcorder on another unit. In this case, format the Card on the unit which will be using the Card. Take steps to ensure that valuable files are stored on a personal computer, etc. as well, before proceeding.
- A Card formatted with other equipment (like a Personal Computer) might be unusable or might take more time for recording. We recommend that you use this Palmcorder to format it.

Using your Palmcorder with Digital Video Equipment (Dubbing) (→ 68)

- Regardless of the setting, dubbing is carried out automatically in the same audio recording Mode as that of the Cassette in the playback-side equipment.
- The images on the monitor of the recording side may be disturbed, but it does not affect the recorded images.
- Even if Playback Digital Effects, Playback Zoom, or Playback Title In have been used, these effects are not output from the DV Terminal.
- Even if you use a device with DV Terminals, you may not be able to perform digital dubbing in some cases.
- Date or other information to be displayed cannot be displayed if the software of the connected equipment does not support the display function.

Using a Card in a Personal Computer

- To erase pictures that you recorded on the Card by using the Palmcorder, be sure to erase them on the Palmcorder, not on the computer.
- You may not be able to properly play back or search the images on the Palmcorder after editing the recorded data or changing the image data on a personal computer.

Cautions for Use

After Use

1. **Take out the Cassette. (→ 20)**
2. **Set the [OFF/ON/MODE] Switch to [OFF]. (→ 20)**
3. **Detach the Power Source and retract the Viewfinder. (→ 18)**
4. **To protect the Lens, attach the supplied Lens Cap. (→ 19)**

Tips for using your Palmcorder

When you use your Palmcorder on a rainy or snowy day or on a beach, make sure that no water enters the Palmcorder.

- Water may cause the Palmcorder or Cassette to malfunction. (Irreparable damage may occur.)
- If sea water splashes onto the Palmcorder, wet a soft cloth with tap water, wring it well, and use it to wipe the Palmcorder body carefully. Then, wipe it again thoroughly with a soft dry cloth.

Keep the Palmcorder away from magnetically charged equipment (such as a TV, game equipment, etc.)

- If you use the Palmcorder near a TV, images or sounds may be disturbed due to electromagnetic wave radiation.
- Do not use near a cell phone because doing so may cause noise to adversely affect the picture and sound.
- Due to strong magnetic fields created by speakers or large motors, recording on the tape may be damaged, or images may be distorted.
- Electromagnetic wave radiation generated by a microprocessor may adversely affect the Palmcorder, causing the disturbance of images and sounds.

- If the Palmcorder is affected by magnetically charged equipment and does not function properly, turn off the Palmcorder power and detach the Battery or AC Adaptor and then connect the Battery or AC Adaptor again. Thereafter, turn on the Palmcorder power.

Do not use your Palmcorder near radio transmitters or high-voltage lines.

- If you record pictures near radio transmitters or high-voltage lines, recorded images or sounds may be adversely affected.

Do not use this Palmcorder for surveillance purposes or other business use.

- If you use the Palmcorder for a long period of time, the internal temperature increases and, consequently, this may cause malfunction.
- This Palmcorder is not intended for industrial use.

When you use your Palmcorder on a beach or similar place, do not let sand or fine dust get into the Palmcorder.

- Sand or dust may damage the Palmcorder or Cassette. (Care should be taken when inserting and removing the Cassette.)

Do not spray insecticides or volatile chemicals onto the Palmcorder.

- If the Palmcorder is sprayed with such chemicals, the Palmcorder body may deform and the surface finish may peel off.
- Do not keep a rubber or plastic product in contact with the Palmcorder for a long period of time.

When cleaning the Palmcorder, do not use any solvent, such as benzine, alcohol, thinner, etc.

- The Palmcorder body may become damaged and the surface finish may peel off.
- Before cleaning, detach the Battery or pull out the AC Cable from the AC Jack.
- Wipe the Palmcorder with a soft dry cloth. To remove stubborn stains, wipe with a cloth that is soaked in a detergent diluted with water and afterward finish wiping with a dry cloth.
- For storing or transporting the Palmcorder, place it in a bag or case lined with soft pads so as to prevent the coating on the Palmcorder body from becoming worn.

After use, be sure to take the Cassette out and detach the Battery from the Palmcorder or pull out the AC Cable from the AC Jack.

- If the Cassette is left in the Palmcorder, the tape sags and deteriorates.
- If you leave the Battery in the Palmcorder or on the AC Adaptor, the Battery will no longer be rechargeable.

About the AC Adaptor

- If the temperature of the Battery is extremely high or extremely low, the [CHARGE] Lamp may continue flashing, and the Battery may not charge. After the temperature of the Battery has decreased or increased sufficiently, charging starts automatically. If the [CHARGE] Lamp continues to flash even after the Battery temperature has decreased or increased sufficiently, the Battery or AC Adaptor may be faulty. In this case, please contact your dealer.
- If the Battery is warm, charging takes longer than usual.
- If you use the AC Adaptor near a radio, radio reception may be disturbed. Keep the AC Adaptor 3 feet (1 meter) or more away from radios.
- When the AC Adaptor is in use, it may generate whirring sounds. This is normal.
- After use, be sure to pull out the AC Cable from the AC Jack. (If they are left connected, a small amount of electricity is consumed.)
- Always keep the electrodes of the AC Adaptor and Battery clean.

Condensation

If excessive moisture condenses in the unit, [DEW DETECTED] Indication will flash, and the Palmcorder will automatically turn off after about 1 minute.

If this happens, follow the steps below:

1 Take out the Cassette.

- None of the other functions operate. Depending on the amount of condensation, removing the Cassette may become difficult. If this happens, wait for 2 to 3 hours before taking the Cassette out.

2 Open the Cassette Compartment and wait for 2 to 3 hours.

- The number of hours you should wait depends on the amount of condensation and ambient temperature.

3 2 to 3 hours later, turn on the Palmcorder and check to see if the [DEW DETECTED] Indication is displayed.

- Even if the [DEW DETECTED] Indication is not displayed, as a precaution, please wait for another hour before using the Palmcorder.

Watch for Condensation Even Before the [DEW DETECTED] Indication Is Displayed.

- Because condensation takes place gradually, the [DEW DETECTED] Indication may not be displayed during the first 10 to 15 minutes of condensation formation inside the Palmcorder.
- In extremely cold places, condensation may freeze and form frost. In this case, the frost melts first, thus forming condensation, and then it takes another 2 to 3 hours to eliminate the condensation.

When the Lens Is Fogged:

Set the [OFF/ON/MODE] Switch to [OFF] and leave the Palmcorder in this condition for about 1 hour. When the lens temperature becomes close to the ambient temperature, the fog disappears naturally.

Digital Video Head Cleaner

If the heads (the parts that make contact with tape) are dirty, mosaic-like noise patterns may appear on the playback image, or the screen as a whole becomes black. If the heads are extremely dirty, recording performance deteriorates, and, in the worst case, the Palmcorder cannot record at all.

Causes of Digital Video Heads Becoming Dirty

- Large quantity of dust in the air
- High-temperature and high-humidity environment
- Damaged tape
- Long operating hours

Using Mini-DV Format Digital Video Head Cleaner (AY-DVMCLA)

1 Insert the Head Cleaner into the Palmcorder in the same manner as a Video Cassette.

2 Press the [▶] Button, and 20 seconds later, Press the [■] Button. (Do not rewind the tape.)

3 Take out the head cleaner. Insert a Video Cassette and start recording. Then, play the tape back to check the recorded image.

4 If the image is still not clear, repeat Steps 1 to 3. (Do not use the Head Cleaner 3 times or more consecutively.)

Notes:

- Do not rewind every time you use the Head Cleaner. Rewind only when the tape reaches the end, and then use it again from the beginning in the same manner as before.
- If the heads become dirty soon after cleaning, the Mini DV may be damaged. In this case, immediately stop using that Cassette.
- Do not clean the heads excessively. (Excessive cleaning may cause excessive wear of the heads. If the heads are worn, images cannot be played back even after the heads are cleaned.)
- If the dirty heads cannot be cleaned with the head cleaner, the Palmcorder needs to be cleaned at a service center. Please consult a distributor or Panasonic Servicenter.
- Video head cleaners can be purchased from service centers.
- Head cleaning due to dirty heads is not considered a malfunction of the product. It is not covered by the warranty.

Periodic Check-up

To maintain the highest image quality, we recommend replacement of worn parts, such as heads, etc., after approximately 1000 hours of use. (This, however, depends on operating conditions, such as temperature, humidity, dust, etc.)

Optimal Use of the Battery

Battery Characteristics

This Battery is a rechargeable lithium ion battery. Its ability to generate power is based upon the chemical reaction that takes place inside it. This reaction is affected by the surrounding temperature and humidity, and, if the temperature is too high or too low, the operating time of the Battery becomes shorter. If the Battery is used in an extremely cold environment, the Battery may operate only for about 5 minutes. If the Battery becomes extremely hot, a protective function may operate, and the Battery may even become unusable for a while.

Be Sure to Detach the Battery After Use

Be sure to detach the Battery from the Palmcorder. (If it is left attached to the Palmcorder, a minute amount of current is consumed even when the Palmcorder power is off.) If the Battery is left attached to the Palmcorder for a long time, over discharge takes place. The Battery may become unusable after it is charged.

Disposing of an unusable Battery

- The Battery has a limited life.
- Do not throw the Battery into fire because it may cause an explosion.

Always Keep the Terminals of the Battery Clean

Prevent the terminals from getting clogged with dirt, dust, or other substances.

If you drop the Battery accidentally, check to see if the Battery body and terminals are damaged. Attaching a damaged Battery to the Palmcorder or AC Adaptor may damage the Palmcorder or AC Adaptor.

Cautions for Storage

Before storing the Palmcorder, take the Cassette out and detach the Battery.

Store all the components in a dry place with a relatively stable temperature.

- Recommended Temperature: 59°F to 77°F (15°C to 25°C), Recommended Humidity: 40% to 60%

Palmcorder

- Wrap it with a soft cloth to prevent dust from getting into the Palmcorder.
- Do not leave the Palmcorder in places that expose it to high temperature.

Battery

- Extremely high temperatures or low temperatures will shorten the life of the Battery.
- If the Battery is kept in smoky or dusty places, the terminals may rust and cause malfunctions.
- Do not allow the Battery terminals to come in contact with metal objects (such as necklaces, hairpins, etc.). This can result in a short circuit or heat generation and, if you touch the Battery in this condition, you may be badly burned.
- Store the Battery in a completely discharged state. To store the Battery for a long period of time, we recommend you charge it once every year and store it again after you completely use up the charged capacity.

Cassette

- Before storing it, rewind the tape to the beginning. If the Cassette is left for more than 6 months with the tape stopped midway, the tape sags (although it depends on the storage conditions.). Be sure to rewind to the beginning.
- Store the Cassette in its case. Dust, direct sunlight (ultraviolet rays), or humidity may damage the tape. Dust contains hard mineral particles, and dusty Cassettes damage the heads of the Palmcorder and other components. Develop a habit of returning the Cassette back to its case.
- Twice a year, wind the tape to the end and then rewind it to the beginning. If the Cassette is left for 1 year or longer without winding or rewinding, temperature and humidity changes may cause the Cassette to deform due to swelling, shrinking, and so forth. The wound tape may stick to itself.
- Do not place a Cassette near highly magnetic substances or equipment.
- The surface of tape is covered with extremely minute magnetic particles, upon which signals are recorded. Magnetic necklaces, toys, etc., have magnetic force that is stronger than you may normally expect, and they may erase the contents of a recording or may cause noise in images and sounds.

Card

- When the Card is being read, do not remove the Card, turn off the power, or subject it to vibration or impact.
- Do not leave the Card in places where there is high temperature or direct sunlight, or where electromagnetic waves or static electricity are easily generated.
- Do not bend or drop the Card. The Card or the recorded content may be damaged.
- After use, be sure to remove the Card from the Palmcorder.
- After use, store the supplied SD Memory Card in the enclosed bag.
- Do not touch the terminals on the back of the Card with your fingers. Do not allow dirt, dust or water to enter it.
- Keep the Memory Card out of reach of children to prevent swallowing.

LCD Monitor/Viewfinder/Lens Hood

LCD Monitor

- In a place with drastic temperature changes, condensation may take place on the LCD Monitor. Wipe it with soft dry cloth.
- If your Palmcorder is extremely cold when you turn its power on, the image on the LCD Monitor will be slightly darker than usual at first. However, as the internal temperature increases, it goes back to the normal brightness.

Extremely high precision technology is employed to produce the LCD Monitor screen featuring a total of approximately 113,000 pixels. The result is more than 99.99% effective pixels with a mere 0.01% of the pixels inactive or always lit. However, this is not a malfunction and does not affect the recorded picture.

Viewfinder

- Do not direct the Viewfinder or Lens to the sun. Internal components may be seriously damaged.
- To clean the inside of the Viewfinder, keep pressing ❶ and hold the Eyecup ❷ and pull it out.

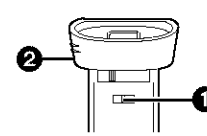

Extremely high precision technology is employed to produce the Viewfinder screen featuring a total of approximately 113,000 pixels. The result is more than 99.99% active pixels with a mere 0.01% of the pixels inactive or always lit. However, this is not a malfunction and does not affect the recorded picture.

Lens Hood

- Attach the MC Protector (optional) or the ND Filter (optional) on the Lens Hood.
- Do not attach anything other than the MC Protector (optional) or the ND Filter (optional) on the Lens Hood.
- When you want to attach a Tele Conversion Lens (not supplied) or a Wide Conversion Lens (not supplied), be sure to first remove the lens Hood by turning it counter-clockwise. When reattaching the Lens Hood, insert ❶ into the slot ❷ and turn it clockwise.

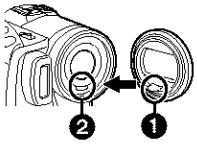

- If you push the [W/T] Lever toward [W] during recording with the filter or conversion lens attached to the Palmcorder, the 4 corners of the image may become dark (vignetting). For details, please refer to the operating instructions for your accessories.
- Be sure to keep the Lens Hood attached to the Palmcorder so as to shut out unnecessary light.

Explanation of Terms

■Digital Video System

In a digital video system, images and sounds are converted into digital signals and recorded on a tape. This complete digital recording is capable of recording and playback with minimal image and sound deterioration.
In addition, it automatically records data, such as Time Code and date/time, as digital signals.

Compatibility with S-VHS or VHS Cassettes

Because this Palmcorder employs a digital system for recording image and sound data, the cassette is not compatible with conventional S-VHS or VHS video equipment that employs an analog recording system.
The size and shape of the Cassettes are also different.

Compatibility with Output Signals

Because AV signal output from the AV signal output jack is analog (the same as conventional video systems), this Palmcorder can be connected with S-VHS or VHS VCR or a TV for playback.
(→ 50, 67)

■Focus

Auto Focus Adjustment

The Auto Focus System automatically moves the internal focusing lens forward or backward and adjusts the focus so that the subject can be seen clearly.
However, the Auto Focus System does not function properly for the following subjects or under the following recording conditions.

Please use the Manual Focus Mode instead.

1) **Recording a subject whose one end is located closer to the Palmcorder and the other end farther away from it**
   - Because Auto Focus makes adjustments at the center of an image, it may be impossible to focus on a subject that is located in both foreground and background.
2) **Recording a subject behind dirty or dusty glass**
   - Because the focus is on the dirty glass, the subject behind the glass will not be in focus.
3) **Recording a subject in dark surroundings**
   - Because the light information that comes through the lens decreases considerably, the Palmcorder may not focus correctly.
4) **Recording a subject that is surrounded by objects with glossy surfaces or by highly reflective objects**
   - Because the Palmcorder focuses on the objects with glossy surfaces or on highly reflective objects, the recording subject may become blurry.
5) **Recording a fast-moving subject**
   - Because the focus lens inside moves mechanically, it may not be able to keep up with the fast-moving subject.
6) **Recording a subject with little contrast**
   - Because the Palmcorder achieves focus based upon the vertical lines of an image, a subject with little contrast, such as a white wall, may become blurry.

White Balance Adjustment

Depending on the type of light source, the colors recorded by the Palmcorder may be affected. In some cases, images may be recorded with a bluish or reddish hue. To minimize the effect of light on the subject's color, White Balance Adjustment becomes necessary.

White Balance Adjustment

White Balance Adjustment recognizes the color of light and makes adjustment so that the white color will become pure white.

Auto White Balance Adjustment

This Palmcorder stores settings that are optimal for several kinds of general light sources. The Palmcorder determines the hue of light that it receives through the lens and White Balance Sensor, thereby judging the recording condition, and selects the closest hue setting. This function is called Auto White Balance Adjustment.

However, since white balance settings for only certain kinds of light sources are stored, the Auto White Balance function does not operate properly when recording occurs under light that is out of the range of the setting values.

Time Code

Time Code signals are data that indicate time measured in hours, minutes, seconds, and frames (30 frames per second.) If this data is included in a recording, an address is assigned to each image on the tape.

- The Time Code is automatically recorded as a part of the sub-code at each recording.
- When a new (previously unrecorded) Cassette is inserted, the Time Code automatically starts from zero. If a recorded Cassette is inserted, the Time Code picks up from the point where the last scene was recorded. (In this case, when the Cassette is inserted, the zero display [0h00m00s00f] may appear, but the Time Code starts from the previous value.)
- The Time Code cannot be reset to zero.
- Unless the Time Code is continuously recorded from the beginning of a tape, accurate editing may not be possible. To ensure that the Time Code will be recorded with no breaks, we recommend the use of the Camera Search Function **(➔ 28)** or the Blank Search Function **(➔ 46)** before recording a new scene.

Memory Stop Function

The Memory Stop Function is useful for the following operations.

Rewinding or fast-forwarding a tape to a desired position

1. **Set [DISPLAY SETUP] >> [C.DISPLAY] >> [MEMORY].**
2. **Reset the Tape Counter to zero at the tape position from which you want to play it back later. (➔ 15, 24)**
3. **Start playback or recording.**
4. **When playback or recording is over: rotate the [OFF/ON/MODE] Switch and set the Palmcorder in the VCR Mode.**
   - The [VCR] Lamp lights up.
5. **Rewind the tape.**
   - The tape automatically stops approximately at the position where the counter was set to zero.

Stopping editing automatically during audio dubbing

1. **Set [DISPLAY SETUP] >> [C.DISPLAY] >> [MEMORY].**
2. **Reset the Tape Counter to zero at the position where you want to stop editing.**
3. **Play back the still pictures where you want to start audio dubbing.**
4. **Start audio dubbing. (➔ 51)**
   - Audio dubbing automatically stops at the position where the counter was set to zero.

Specifications

Digital Palmcorder Information for your safety

Power Source:	DC 7.9/7.2 V
Power Consumption:	Recording 6.0 W
Recording Format:	Mini DV (Consumer-use Digital Video SD Format)
Tape Used:	6.35 mm digital video tape
Recording/Playback Time:	SP: 80 min.; LP: 120 min. (with DVM80)
Video Recording System:	Digital Component
Television System:	EIA Standard: 525 lines 60 Fields NTSC color signal
Audio Recording System:	PCM Digital Recording 16 bit (48 kHz/2 track), 12 bit (32 kHz/4 track)
Image Sensor:	1/6-inch CCD Image Sensor
Lens:	Auto Iris, F1.8, Focal Length; 2.45-24.5 mm, Macro (Full Range AF)
Filter Diameter:	37 mm
Zoom:	10:1 Power Zoom
Monitor:	2.5-inch LCD
Finder:	Color Electronic Viewfinder
Microphone:	Stereo
Speaker:	1 round speaker 20 mm
Standard Illumination:	1,400 lx
Minimum Required Illumination:	12 lx
Video Output Level:	1.0 Vp-p, 75 ohm
S-Video Output Level:	Y Output: 1.0 Vp-p, 75 ohm C Output: 0.286 Vp-p, 75 ohm
Audio Output Level:	316 mV, 600 ohm
Video Input Level:	1.0 Vp-p, 75 ohm
S-Video Input Level:	Y Input: 1.0 Vp-p, 75 ohm C Input: 0.286 Vp-p, 75 ohm
Audio Input Level (Line):	316 mV, 10 kohm or more
Mic Input:	Mic sensitivity -50 dB (0 dB = 1 V/Pa, 1 kHz) (Stereo mini jack)
USB:	Card reader/writer function, (No copyright protection support) USB 2.0 compliant (max. 12 Mbps)
Digital Interface:	DV Input/Output Terminal (IEEE1394, 4-pin)
Dimensions:	2.80 (W) ×3.03 (H) ×5.20 (D) inch 71 (W) ×77 (H) ×132 (D) mm
Weight:	1.08 lbs. (490 g) (without Battery and DV cassette)
Operating Temperature:	32 °F -104 °F (0 °C-40 °C)
Operating Humidity:	10% -80%

Card Memory Functions

Recording Media:	SD Memory Card, MultiMediaCard
Image Compression:	JPEG

Maximum Number of pictures that can be recorded on the supplied SD Memory Card

When the size of pictures is [640×480]

FINE:	approx. 45 pictures
NORMAL:	approx. 95 pictures
ECONOMY:	approx. 190 pictures

When the size of pictures is [1280×960]

FINE:	approx. 8 pictures
NORMAL:	approx. 14 pictures
ECONOMY:	approx. 20 pictures

- When you record in one Memory Card using various modes (FINE, NORMAL, ECONOMY), the maximum number of images available will not exceed the indications stated above.

Still Image Size:	Mega-Pixel Recording; 1280×960 pixels (1.23 million pixels) VGA Recording; 640×480 pixels
Video Compression:	MPEG4
MPEG4 Image Size:	
SUPERFINE:	320×240 pixels (QVGA)
FINE:	176×144 pixels (QCIF)
NORMAL:	176×144 pixels (QCIF)
Sound Compression:	G.726

WEB Camera

Compression:	JPEG
Image Size:	160×120 pixels (QQVGA)

- The indicated Maximum Number of pictures that can be recorded is an approximate calculation. The number of recordable still pictures on the SD Memory Card may differ depending on the subject.

AC Adaptor Information for your safety

Power Source:	AC 110-240 V, 50/60 Hz
Power Consumption:	19 W 0.5 W (When not in use.)
DC Output:	DC 7.9 V, 1.4 A (Palmcorder Operation) DC 8.4 V, 0.65 A (Battery Charging)
Dimensions:	2.40 (W) ×1.26 (H) ×3.58 (D) inch 61 (W) ×32 (H) ×91 (D) mm
Weight:	0.231lbs. (105 g)

Weight and dimensions shown are approximate.
Designs and specifications are subject to change without prior notice.

Palmcorder Accessory System

Accessory#	Figure	Description
PV-DAC13	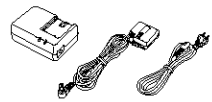	AC Adaptor with AC Cable and DC Cable
*CGA-DU07		680mAh/Rechargeable Lithium Ion Battery Pack
*CGA-DU14		1360mAh/Rechargeable Lithium Ion Battery Pack
*CGA-DU21		2040mAh/Rechargeable Lithium Ion Battery Pack
PV-DDC9 (For USA) PV-DDC9-K (For Canada)	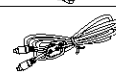	DV Interface Cable (i.LINK) (4-pin to 4-pin)
PV-DRC9 (For USA) PV-DRC9-K (For Canada)		IR Remote Control
RP-SD064BPPA RP-SD032BPPA RP-SD016BPPA		64 MB SD Memory Card 32 MB SD Memory Card 16 MB SD Memory Card
BN-SDCAPE/1B (For USA) BN-SDCAPU/1B (For Canada)		USB Reader/Writer for SD Memory Card (compatible with MultiMediaCard)
BN-SDABPE/1B (For USA) BN-SDABPU/1B (For Canada)		SD PCMCIA Adaptor (compatible with MultiMediaCard)
PV-PD2100 (USA only)		Digital Video Printer

*Please refer to page 18, concerning the battery charging time and available recording time.

***NOTE: Accessories and/or model numbers may vary by country. Please consult your local dealer.**

Palmcorder Accessory Order Form (For USA Customers)

Please photocopy this form when placing an order.

1. Palmcorder Model # _____

2. Items Ordered

Accessory #	Description	Price Each	Quantity	Total Price
			Subtotal	
			Your State & Local Sales Tax	
			Shipping & Handling	6.95
			Total Enclosed	

3. Method of payment (check one)

☐ Check of Money Order enclosed (NO C.O.D.SHIPMENTS)

☐ VISA Credit Card # _____

☐ MasterCard Expiration Date _____

☐ Discover Customer Signature _____

Make Check or Money Order to: PANASONIC ACCESSORIES

(Please do not send cash)

4. Shipping information (UPS delivery requires complete street address)

Ship To:
Mr.
Mrs.
Ms. _____
First Last

_____
Street Address

_____ _____ _____
City State Zip

Phone#:
Day ( ) _____
Night ( ) _____

TO OBTAIN ANY OF OUR PALMCORDER ACCESSORIES YOU CAN DO ANY OF THE FOLLOWING:
VISIT YOUR LOCAL PANASONIC DEALER
OR
CALL PANASONIC'S ACCESSORY ORDER LINE AT 1-800-332-5368
[6 AM-5 PM M-F, 6 AM-10:30 AM SAT, PACIFIC TIME]
OR
MAIL THIS ORDER TO: PANASONIC SERVICES COMPANY ACCESSORY ORDER OFFICE
20421 84th Avenue South Kent, WA. 98032

In CANADA, please contact your local Panasonic dealer for more information on Accessories.

Before Requesting Service (Problems and Solutions)

If you are experiencing one of the following problems with your Digital Palmcorder, it may be something you can correct yourself. Check the list below for Problems and Solutions.

Problems	Solutions
The Palmcorder power cannot be turned on.	Is the power source connected correctly?
The Palmcorder power turned off automatically.	If you leave the Palmcorder in Recording Pause Mode for more than 5 minutes, the power is turned off automatically to protect the tape and to save the Battery power.
The Palmcorder power does not stay on long enough.	Is the Battery low? Charge the Battery or attach a fully charged Battery.
Something is wrong with the Palmcorder's operation. The Palmcorder is turned on but no functions operate.	Press the [RESET] Button on the Palmcorder with a pointed object. If this does not solve the problem, first disconnect the power supply and wait for a minute or so, and then reconnect the power supply to turn the power back on. (If the above operation is performed when the [ACCESS] Lamp of the Card Slot is lit, the data on the Card may be damaged.)
Battery runs down quickly.	• Is the Battery fully charged? Charge it with the AC Adaptor. • Are you using the Battery in an extremely cold place? In cold places, the operating time of the Battery becomes shorter. • Has the Battery worn out? If the operating time is still too short even after the Battery is fully charged, the Battery has worn out.
The Battery cannot be charged.	If the DC Cable is connected to the AC Adaptor, charging cannot be performed. Disconnect the DC Cable.
Recording does not start although power is supplied to the Palmcorder and the Cassette is correctly inserted.	• Is the accidental erasure protection tab on the Cassette open? If it is open (set to [SAVE]), recording cannot be performed. • Is the tape wound to the end? Insert a new Cassette. • Is the Palmcorder power turned on? • Is the [CAMERA] Lamp on? If the [CAMERA] Lamp is not on, no recording function can be operated. • Has condensation occurred? Wait until the [DEW DETECTED] Indication disappears.

If you are experiencing one of the following problems with your Digital Palmcorder, it may be something you can correct yourself. Check the list below for Problems and Solutions.

Problems	Solutions
Audio dubbing cannot be performed.	• Is the accidental erasure protection tab on the Cassette open? If it is open (set to [SAVE]), recording cannot be performed. • Are you attempting to edit a tape portion that was recorded in LP Mode? LP Mode does not allow audio dubbing to operate.
The Time Code becomes inaccurate.	The Time Code Indication counter may not be constant in the reverse direction in Slow Motion Playback Mode, but this is not a malfunction.
The Remaining Tape Time Indication disappears.	When you record still pictures in PhotoShot Mode, the Remaining Tape Time Indication may disappear temporarily. However, it reappears when the Palmcorder is set back to Normal Recording Mode.
The Remaining Tape Time Indication does not match the actual remaining tape time.	• If scenes of less than 15 seconds are continuously recorded, the remaining tape time cannot be displayed correctly. • In some cases, the Remaining Tape Time Indication may show remaining tape time that is 2 to 3 minutes shorter than the actual remaining tape time.
Video cannot be played back even when the [▶] Button is pressed.	Is the [VCR] Lamp on? If the [VCR] Lamp is not on, the playback function cannot be used.
Mosaic-like noise patterns appear on images during Cue, Review or Slow Motion Playback.	This phenomenon is characteristic of digital video systems. It is not a malfunction.
Although the Palmcorder is correctly connected to a TV, playback images cannot be seen.	Have you selected Video Input on the TV? Please read the operating instructions of your TV and select the input that matches the input jacks used for the connection.
Playback image is not clear.	Are the heads of the Palmcorder dirty? If the heads are dirty, playback image will not be clear.
No sound is played back from the built-in speaker or headphones of the Palmcorder.	Is the volume too low? During playback, continue pressing the [PUSH] Dial until the [VOLUME] Indication appears. Then, rotate the [PUSH] Dial to adjust the volume.
Different sounds are reproduced at the same time.	[12bit AUDIO] on the [PLAYBACK FUNCTIONS] Sub-Menu of the [VCR FUNCTIONS] Main-Menu has been set to [MIX]. As a result, the original sound and sound that was recorded by audio dubbing are played back together. It is possible to reproduce the sounds separately.

If you are experiencing one of the following problems with your Digital Palmcorder, it may be something you can correct yourself. Check the list below for Problems and Solutions.

Problems	Solutions
The original sound was erased when audio dubbing was performed.	If you perform audio dubbing on a recording done in [16bit] Mode, the original sound will be erased. If you want to preserve the original sound, be sure to select [12bit] Mode at the time of recording.
Sounds cannot be played back.	• Although a Cassette with no audio dubbing is being played, is [12bit AUDIO] on the [PLAYBACK FUNCTIONS] Sub-Menu of the [VCR FUNCTIONS] Main-Menu set to [ST2]? To play back a Cassette with no audio dubbing, [12bit AUDIO] must be set to [ST1]. • Is the Variable Speed Search Function working? Press the [▶] Button to cancel the Variable Speed Search Function.
The recorded picture on the Memory Card is not clear.	Do you have [PICTURE QUALITY] on the [CARD SETUP] Sub-Menu set to [NORMAL] or [ECONOMY]? If recording is made when it is set to [NORMAL] or [ECONOMY], a detailed image may show a mosaic pattern. Set the [PICTURE QUALITY] to [FINE]. **(➡ 54)**
Card PhotoShot playback pictures do not look normal.	There is a possibility that the images are damaged. To prevent the loss of image data, we recommend that you back images up on a Cassette or personal computer. **(➡ 60, 71)**
Even if a Card is formatted, it cannot be used.	There is a possibility of damage to either the Palmcorder or the Card. Please contact Panasonic Call Centre.

Request for Service Notice (USA Only)

Please photocopy this form when making a request for service notice.

In the unlikely event this product needs service.

Request for Service Notice:

- Please include your **proof of purchase.** (Failure to due so will delay your repair.)
- To further speed your repair, please provide an explanation of what wrong with the unit and any symptom it is exhibiting.

Mail this completed form and your Proof of Purchase along with your unit to:

Panasonic Services Company
1705 N. Randall Road
Elgin, IL. 60123-7847
Attn: Camcorder Repair

Please write the displayed above Self Diagnostic number here.

Limited Warranty (For USA Customers)

PANASONIC CONSUMER ELECTRONICS COMPANY,DIVISION OF MATSUSHITA ELECTRICCORPORATION OF AMERICA
One Panasonic Way Secaucus, New Jersey 07094

PANASONIC SALES COMPANY, DIVISION OF MATSUSHITA ELECTRIC OF PUERTO RICO, INC.,
AVE. 65 de Infantería, Km. 9.5 San Gabriel Industrial Park, Carolina, Puerto Rico 00985

Panasonic/Quasar Video Products
Limited Warranty

Limited Warranty Coverage

If your product does not work properly because of a defect in materials or workmanship, Panasonic Consumer Electronics Company or Panasonic Sales Company (collectively referred to as "the warrantor") will, for the length of the period indicated on the chart below, which starts with the date of original purchase ("warranty period"), at its option either (a) repair your product with new or refurbished parts, or (b) replace it with a new or a refurbished product. The decision to repair or replace will be made by the warrantor.

Product	Parts	Labor	Service	Contact Number
Camcorder	One (1) Year (except CCD Image Sensor) CCD Image Sensor - 6 (Six) Months	Ninety (90) Days Ninety (90) Days	Carry-In or Mail-In	1-800-211-PANA(7262)
DVD/VCR Deck, A/V Mixer	One (1) Year	Ninety (90) Days	Carry-In or Mail-In	1-800-211-PANA(7262)
TV/VCR, TV/DVD, TV/DVD/VCR Combination	One (1) Year (except CRT) CRT - Two (2) Years	Ninety (90) Days Ninety (90) Days	Carry-In: 21" CRTand Smaller In-Home or Carry-In: 22" CRT and Larger	1-800-211-PANA(7262)
TV/HDR Combination	One (1) Year (except CRT) CRT - Two (2) Years	Ninety (90) Days Ninety (90) Days	In-Home or Carry-In	1-888-843-9788
Rechargeable Batteries (in exchange for defective item)	Ten (10) Days	Not Applicable	Carry-In or Mail-In	1-800-211-PANA(7262)
Tape (in exchange for defective item)	Five (5) Days	Not Applicable	Carry-In or Mail-In	1-800-211-PANA(7262)
Memory Cards (in exchange for defective item)	Ninety (90) Days	Not Applicable	Carry-In or Mail-In	1-800-211-PANA(7262)

During the "Labor" warranty period there will be no charge for labor. During the "Parts" warranty period, there will be no charge for parts. You must carry-in or mail-in your product or arrange for in-home service, as applicable, during the warranty period. If non-rechargeable batteries are included, they are not warranted. This warranty only applies to products purchased and serviced in the United States or Puerto Rico. This warranty is extended only to the original purchaser of a new product which was not sold "as is". A purchase receipt or other proof of the original purchase date is required for warranty service.

Carry-In, Mail-in or In-Home Service

For Carry-In, Mail-In or In-HomeService (as applicable) in the United States call toll free contact number listed above or visit Panasonic Web Site: http://www.panasonic.com
For assistance in Puerto Rico call Panasonic Sales Company (787)-750-4300 or fax (787)-768-2910.
In-Home service, if applicable, requires clear, complete and easy access to the product by the authorized servicer and does not include removal or re-installation of an installed product. It is possible that certain in-home repairs will not be completed in-home, but will require that the product, or parts of the product, be removed for shop diagnosis and/or repair and then returned.

Limited Warranty Limits And Exclusions

This warranty ONLY COVERS failures due to defects in materials or workmanship, and DOES NOT COVER normal wear and tear or cosmetic damage, nor does it cover markings or retained images on the picture tube resulting from viewing fixed images (including, among other things, letterbox pictures on standard 4:3 screen TV's, or non-expanded standard 4:3 pictures on wide screen TV's, or onscreen data in a stationary and fixed location). The warranty ALSO DOES NOT COVER damages which occurred in shipment, or failures which are caused by products not supplied by the warrantor, or failures which result from accidents, misuse, abuse, neglect, mishandling, misapplication, alteration, faulty installation, set-up adjustments, misadjustment of consumer controls, improper maintenance, power line surge, lightning damage, modification, or commercial use (such as in a hotel, office, restaurant, or other business), rental use of the product, service by anyone other than a Factory Servicenter or other Authorized Servicer, or damage that is attributable to acts of God.

THERE ARE NO EXPRESS WARRANTIES EXCEPT AS LISTED UNDER "LIMITED WARRANTY COVERAGE". THE WARRANTOR IS NOT LIABLE FOR INCIDENTAL OR CONSEQUENTIAL DAMAGES RESULTING FROM THE USE OF THIS PRODUCT, OR ARISING OUT OF ANYBREACH OF THIS WARRANTY.

(As examples, this excludes damages for lost time, cost of having someone remove or re-install an installed unit if applicable, or travel to and from the servicer, loss of media or images, data or other memory or recorded content. The items listed are not exclusive, but are for illustration only.)

ALL EXPRESS AND IMPLIED WARRANTIES, INCLUDING THE WARRANTY OF MERCHANTABILITY, ARE LIMITED TO THE PERIOD OF THE LIMITED WARRANTY.

Some states do not allow the exclusion or limitation of incidental or consequential damages, or limitations on how long an implied warranty lasts, so the exclusions may not apply to you. This warranty gives you specific legal rights and you may also have other rights which vary from state to state. If a problem with this product develops during or after the warranty period, you may contact your dealer or Servicenter. If the problem is not handled to your satisfaction, then write to the warrantor's Consumer Affairs Department at the addresses listed for the warrantor.

PARTS AND SERVICE (INCLUDING COST OF AN IN-HOME SERVICE CALL, WHERE APPLICABLE) WHICH ARE NOT COVERED BY THIS LIMITED WARRANTY ARE YOUR RESPONSIBILITY.

Customer Services Directory

Service in Canada: As per Sevicenter listed in Canadian warranty information on page 108.

For Product Information, Operating Assistance, Literature Request, Dealer Locations, and all Customer Service inquiries please contact:
1-800-211-PANA (7262), Monday-Friday 9 am-9 pm; Saturday-Sunday 10 am-7 pm, EST.
or send e-mail : consumerproducts@panasonic.com
For hearing or speech impaired TTY users, TTY : 1-877-833-8855

Web Site: http://www.panasonic.com
You can purchase parts, accessories or locate your nearest servicenter by visiting our Web Site.

Accessory Purchases:

1-800-332-5368 (Customer Orders Only)
For hearing or speech impaired TTY users, TTY : 1-866-605-1277
Panasonic Services Company 20421 84th Avenue South, Kent, WA 98032
(Monday-Friday 6 am-5 pm; Saturday 6 am-10:30 am, PST)
(Visa, MasterCard, Discover Card, American Express, Check)

Product Repairs

Centralized Factory Servicenter

MAIL TO : Panasonic Services Company
1705 N. Randall Road,
Elgin, IL 60123-7847
Attention: Camcorder Repair

Please carefully pack and ship, prepaid and insured, to the Elgin Centralized Factory Servicenter. Customer's in Puerto Rico, please ship or carry in to location below ("Service in Puerto Rico").

Service in Puerto Rico

Matsushita Electric of Puerto Rico, Inc. Panasonic Sales Company/ Factory Servicenter:
Ave. 65 de Infanteria. Km. 9.5, San Gabriel Industrial Park, Carolina, Puerto Rico 00985
Phone (787) 750-4300 Fax (787) 768-2910

As of August 2002

Warranty (For Canadian Customers)

Panasonic Canada Inc.
5770 Ambler Drive, Mississauga, Ontario L4W 2T3

PANASONIC PRODUCT – LIMITED WARRANTY

Panasonic Canada Inc. warrants this product to be free from defects in material and workmanship and agrees to remedy any such defect for a period as stated below from the date of original purchase.

Camcorder Product – One (1) year, parts and labour

LIMITATIONS AND EXCLUSIONS

This warranty does not apply to products purchased outside Canada or to any product which has been improperly installed, subjected to usage for which the product was not designed, misused or abused, damaged during shipping, or which has been altered or repaired in any way that affects the reliability or detracts from the performance, nor does it cover any product which is used commercially. Dry cell batteries are also excluded from coverage under this warranty.

This warranty is extended to the original end user purchaser only. A purchase receipt or other proof of date of original purchase is required before warranty service is performed.

THIS EXPRESS, LIMITED WARRANTY IS IN LIEU OF ALL OTHER WARRANTIES, EXPRESS OR IMPLIED, EXCLUDING ANY IMPLIED WARRANTIES OF MERCHANTABILITY OR FITNESS FOR A PARTICULAR PURPOSE.

IN NO EVENT WILL PANASONIC CANADA INC. BE LIABLE FOR ANY SPECIAL, INDIRECT OR CONSEQUENTIAL DAMAGES.

In certain instances, some jurisdictions do not allow the exclusion or limitation of incidental or consequential damages, or the exclusion of implied warranties, so the above limitations and exclusions may not be applicable.

WARRANTY SERVICE

For product operation and information assistance, please contact your Dealer or our Customer Care Centre at:

Telephone #: (905) 624-5505 Fax #: (905) 238-2360 Web: www.panasonic.ca

For product repairs, please contact one of the following:

- Your Dealer who will inform you of an authorized Servicentre nearest you.
- Our Customer Care Centre at (905) 624-5505 or www.panasonic.ca
- A Panasonic Factory Servicentre listed below:

Richmond, British Columbia	Calgary, Alberta	Mississauga, Ontario	Lachine, Québec
Panasonic Canada Inc.	Panasonic Canada Inc.	Panasonic Canada Inc.	Panasonic Canada Inc.
12111 Riverside Way	6835-8th St. N. E.	5770 Ambler Dr.	3075, rue Louis A. Amos
Richmond, BC	Calgary, AB	Mississauga, ON	Lachine, QC
V6W 1K8	T2E 7H7	L4W 2T3	H8T 1C4
Tel: (604) 278-4211	Tel: (403) 295-3955	Tel: (905) 624-8447	Tel: (514) 633-8684
Fax: (604) 278-5627	Fax: (403) 274-5493	Fax: (905) 238-2418	Fax: (514) 633-8020

IF YOU SHIP THE PRODUCT TO A SERVICENTRE

Carefully pack and send prepaid, adequately insured and preferably in the original carton.
Include details of the defect claimed, and proof of date of original purchase.

Index

A

AC Adaptor 18
ArcSoft 76
Audio Dubbing 51
Auto Focus 97
Auto White Balance Adjustment 98

B

Backlight Compensation 33
Before Requesting Service 102
Black & White Mode 40, 48
Blank Search 46
Built-in Video Flash 39

C

Camera Search 28
Card PhotoShot 53
Card Playback 57
Charging the Battery 18
Cinema Function 33
Color Temperature 38
Condensation 94
Continuous PhotoShot 30
Cue Playback 44
Customer Services Directory 107

D

Date/Time Indication 84
Date/Time Setting 27
Digital Effect 40, 41, 42
Digital Still Picture 30
Digital Zoom 32
DPOF Setting 66
DPOF setting & Slide Show 83
Dubbing 67, 68
DV STUDIO 3.1E-SE 74

E

Erasure Prevention Slider 20

F

F Number 36
Fade 32
File Lock Setting 64
File Search Mode 59
Folder Structure 80
Formatting 66

G

G.726 Audio Decoder 75
Gain up Mode 40

I

Image Stabilizer Function 33
Index Search 47
Initializing the Modes 84
Iris 36

J

Jog Playback 45

L

LCD Monitor 21
Limited Warranty (Canada) 108
Limited Warranty (USA) 106
Low Light Mode 35
Low Light Shot 53

M

Macro Close-up Function 31
MagicPix Function 34
MagicWire Remote Control with Narration Mic 16
Manual Focus 37
Memory Card 52
Memory Stop Function 98
Menu Screen 22
Microphone 90
Mirror Mode (Digital Effect) 40, 48
Mix Mode 41, 48
Mosaic Mode 40, 48
Moving Picture (MPEG4) Recording 56
Multi-Picture Mode 42, 49

N

Negative Mode 40, 48

P

Palmcorder Accessories 100
Palmcorder Accessory Order Form 101
PhotoShot 30
Picture-in-Picture Mode 41
Playback Digital Effect Functions 48, 49
Playback Zoom 46
Playing Back on Your TV 50
Portrait Mode 35
Program AE 35
Progressive Photoshot 30

Q

Quick Start 29

R

RapidFire Consecutive Photoshot 54
Recording Check 28
Recording Pause Mode 28
Recording Speed 27
Remote Controller 15, 17
Repeat Playback 44
Request for Service Notice (USA Only) 105
Review Playback 44

S

SD Memory Card 79
Self-Recording 29
Self-timer Recording 30
Sepia Mode 40, 48
Shutter Speed 36
Slide Show 61
Slow Motion Playback 45
Soft Skin Function 34
Solarization Mode 40, 48
Sound Volume 43
SP/LP Mode 27
Sports Mode 35
Spotlight Mode 35
Still Advance Playback 45
Strobe Mode 40, 48
Sub-Code 98
Surf & Snow Mode 35
Swing Mode 42, 49

T

Tele-Macro Function 31
Time Code 98
Title 62, 63
Trailing Effect Mode 40, 48

U

USB Connection Kit 69

V

Variable Speed Search 44
Video Head Clogging 95
Viewfinder 21
Voice Power Save 92
Voice Recording 55

W

Web Camera 72
White Balance 37, 38, 98
Wind Noise Reduction 35
Wipe Mode 41, 48

Z

Zoom 31
Zoom Microphone 31

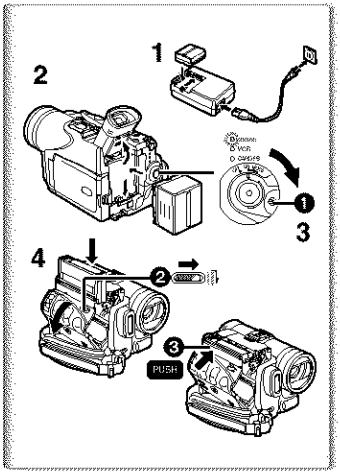

Spanish Quick Use Guide/Guía española para el uso rápido

■Para iniciar

1 Una la batería al adaptador de CA y cárguela.

- Dado que la batería no se cargará cuando el cable de entrada CC está conectado al adaptador de CA, desconéctelo.
- La lámpara [POWER] y la lámpara [CHARGE] se encienden y comienza la carga.
- Cuando se apaga la luz [CHARGE], termina la carga.

2 Meta la batería cargada en la videocámara.

3 Ponga el interruptor [OFF/ON/MODE] a [ON] mientras que pulsa el botón ❶.

- La lámpara [CAMERA] se enciende.

4 Colocación del cassette.

- Desplace la palanca [OPEN/EJECT] ❷ hacia delante y tire hacia abajo para abrir el compartimento del cassette.
- Inserte el cassette.
- Cierre el soporte del cassette presionado la marca [PUSH] ❸.
- Cierre la tapa del compartimento cassette.

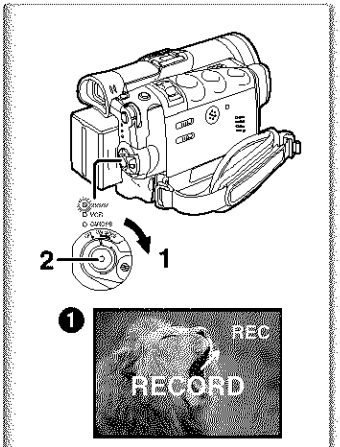

■Grabación

1 Ponga el interruptor [OFF/ON/MODE] en [ON].

- La lámpara [CAMERA] se enciende.

2 Oprima el botón de inicio/parada de grabación.

- Comienza la grabación.
- Una vez desplegado [RECORD] cambia a [REC]. ❶

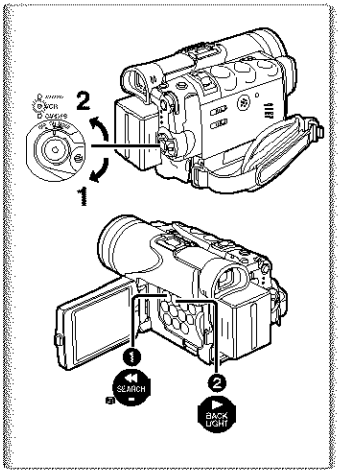

■Reproducción

1 Gire el interruptor [OFF/ON/MODE] y ajuste la videocámara al modo VCR.

- La lámpara [VCR] se enciende.
- Oprima el botón [◄◄] ❶ para rebobinar la cinta.
- Oprima el botón [►] ❷ para comenzar la reproducción.

2 Ponga el interruptor [OFF/ON/MODE] a [OFF] mientras que pulsa el botón.

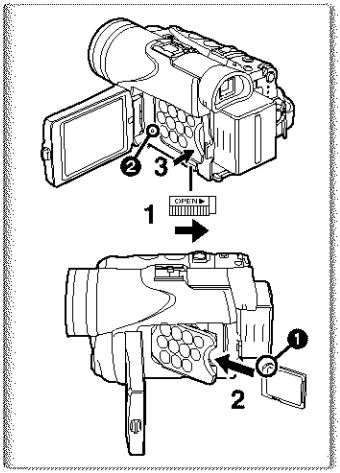

■Utilización de la tarjeta

Antes de insertar la tarjeta, asegúrese de apagar la videocámara.

1 **Desplace la palanca [OPEN] para abrir la tapa del compartimento de tarjeta.**

2 **Manteniendo la tarjeta de memoria con su ángulo cortado hacia la parte superior ❶, introdúzcala en el compartimento de tarjeta.**

3 **Cierre firmemente la tapa del compartimento de tarjeta.**

- Mientras que la lámpara [ACCESS] ❷ está encendida, no trate nunca de abrir la tapa de la ranura de tarjeta, de extraer la tarjeta, de apagar la videocámara ni de conmutar el selector [TAPE/CARD/CARD MODE]. Dichas acciones dañarán la tarjeta, harán perder los datos grabados y originarán un funcionamiento defectuoso de la videocámara.

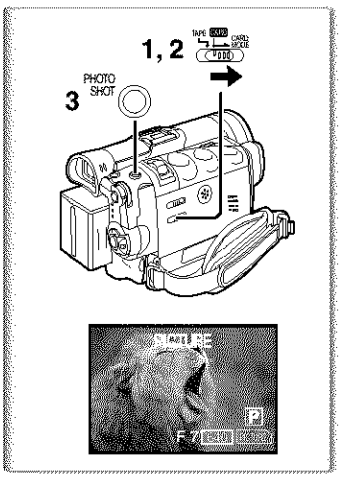

■Photoshot en tarjeta

1 **Ponga el selector [TAPE/CARD/CARD MODE] en [CARD].**

2 **Ajuste el selector [TAPE/CARD/CARD MODE] a [CARD MODE] hasta que aparezca la indicación [PICTURE].**

3 **Oprima el botón [PHOTO SHOT] .**

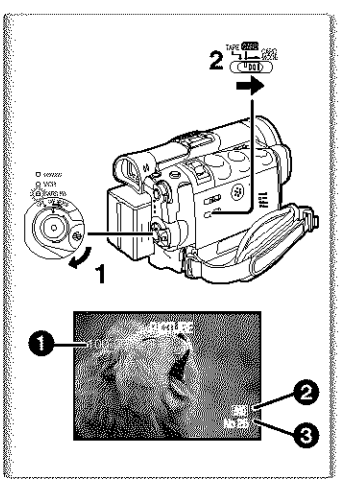

■Reproducción de la tarjeta

1 **Ajuste la videocámara al modo de reproducción de tarjeta.**
- La lámpara [CARD P.B] se enciende.

2 **Ajuste el selector [TAPE/CARD/CARD MODE] a [CARD MODE] hasta que aparezca la indicación [PICTURE], [MPEG4] o [VOICE].**

3 **Inicio de la reproducción.**

❶ Nombre de la carpeta-archivo (Cuando se reproduce la imagen)
❷ Tamaño de la imagen (Cuando se reproduce la imagen)
❸ Número de archivo (Cuando se reproducen la imagen o los datos de la voz)

Panasonic Consumer Electronics Company,
Division of Matsushita Electric Corporation of America

Executive Office:
One Panasonic Way, Secaucus, NJ 07094
(201) 348-7000

Panasonic Company East: 6749 Baymeadow Drive, Glen Burnie, MD 21060
Panasonic Company Central: 1707 North Randall Road, Elgin, IL 60123
Panasonic Company West: 6550 Katella Avenue, Cypress, CA 90630

Division of Matsushita Electric Corporation of America

Panasonic Sales Company ("PSC")
Division of Matsushita Electric of Puerto Rico, Inc.
San Gabriel Industrial Park, Ave. 65 de Infanteria, Km. 9.5, Carolina, PR 00985

Panasonic Canada Inc.
5770 Ambler Drive, Mississauga, ON, L4W 2T3

Printed in Japan
LSQT0693A
F0303Nm0 (100 Ⓐ)