LS elite 780

0-8 mph • 2.0 hp • direct pulse interface • fat burn guide

SEARS®

Model No. 831.297541
Serial No. _____

The serial number can be found in the location shown below. Write the serial number in the space above.

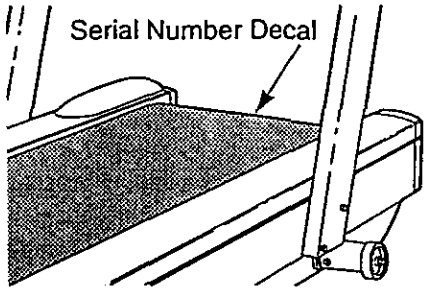

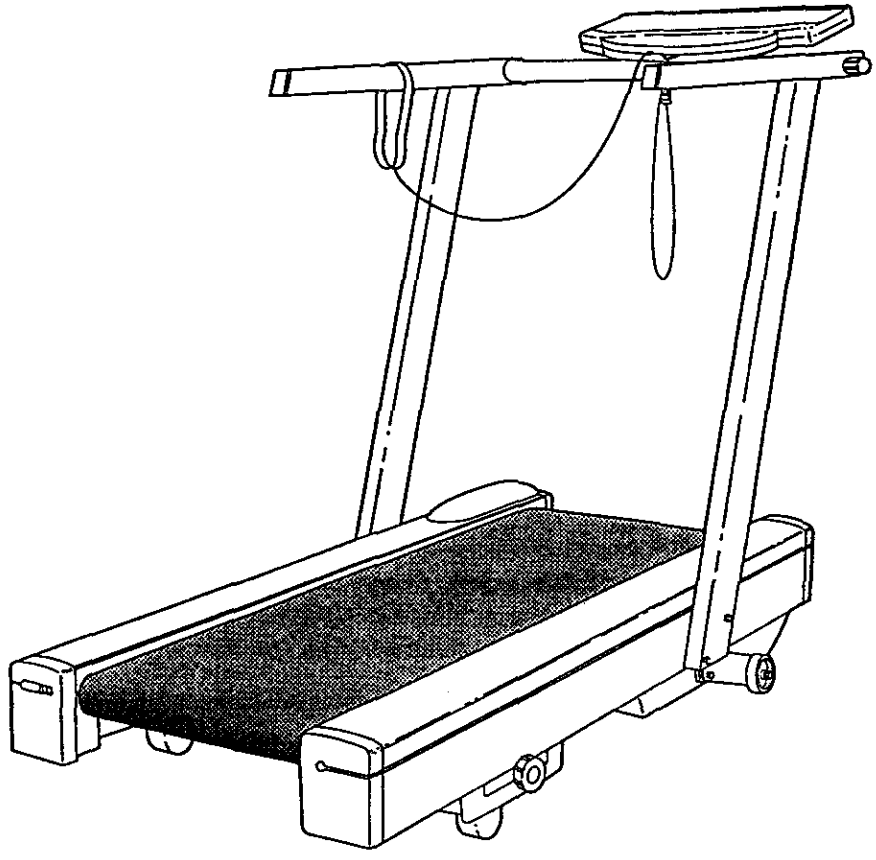

⚠ CAUTION!:

Read all safety precautions and instructions in this manual before using this equipment. Keep this manual in a safe place for future reference.

OWNER'S MANUAL

FULL 90 DAY WARRANTY

For 90 days from the date of purchase, when proper assembly and maintenance procedures detailed in the Owner's Manual are followed, SEARS will, free of charge, repair or replace and install a replacement part for any defective part, when this treadmill is used in a normal manner.

This warranty does not apply when this treadmill is used for commercial or rental purposes.

SERVICE IS AVAILABLE SIMPLY BY CONTACTING YOUR NEAREST SEARS SERVICE CENTER/DEPARTMENT IN THE UNITED STATES.

This warranty gives you specific legal rights, and you may also have other rights which vary from state to state.

SEARS, ROEBUCK AND CO., DEPT. 817WA,
HOFFMAN ESTATES, IL 60179

LS elite 780

0-8 mph • 2.0 hp • direct pulse interface • fat burn guide

TABLE OF CONTENTS

IMPORTANT SAFETY PRECAUTIONS 4
BEFORE YOU BEGIN 5
ASSEMBLY 6
HOW TO USE THE PULSE SENSOR 8
OPERATION AND ADJUSTMENT 9
TROUBLE-SHOOTING AND STORAGE 14
CONDITIONING GUIDELINES 16
PART LIST 18
EXPLODED DRAWING 19
ORDERING REPLACEMENT PARTS ..... Back Cover

⚠WARNING: Before beginning this or any exercise program, consult your physician. This is especially important for persons over the age of 35 or persons with pre-existing health problems. Read all instructions before using. SEARS assumes no responsibility for personal injury or property damage sustained by or through the use of this product.

IMPORTANT SAFETY PRECAUTIONS

⚠ WARNING: To reduce the risk of burns, fire, electric shock or injury to persons, read the following important safety precautions and information before operating the treadmill.

1. Position the treadmill on a level surface, with at least 8 feet of clearance behind the treadmill. Do not place the treadmill near water, outdoors or on any surface that blocks an air opening. Do not operate where aerosol products are used or where oxygen is being administered.

2. When connecting the power cord (see HOW TO PLUG IN THE POWER CORD on page 9), plug the power cord directly into a grounded circuit capable of carrying 12 or more amps. No other appliance should be on the same circuit. Keep the power cord away from heated surfaces. If an extension cord is needed, use only a 14-gauge general-purpose cord of five feet or less in length with a three-wire conductor.

3. Never move the walking belt while the power is turned off. Do not operate the treadmill if the power cord or plug is damaged, or if the treadmill is not working properly. (See BEFORE YOU BEGIN on page 5 if the treadmill is not working properly.)

4. Wear appropriate exercise clothing when using the treadmill; do not wear loose clothing that could become caught in the treadmill. *Always wear athletic shoes; never use the treadmill with bare feet, wearing only stockings or in sandals.* Athletic support clothes are recommended for both men and women.

5. The pulse sensor is not a medical device. Various factors, including the user's movement while exercising, may affect the accuracy of heart rate readings. The sensor is intended only as an exercise aid in determining heart rate trends in general.

6. Never start the treadmill while you are standing on the walking belt. Always hold the handrail when exercising on the treadmill.

7. Never allow more than one person on the treadmill at a time. The treadmill should not be used by persons weighing more than 250 pounds.

8. Keep small children away from the treadmill at all times. Never leave the treadmill unattended while it is running. Always turn the power off when the treadmill is not in use.

9. Never drop or insert any object into any opening.

10. To reduce the possibility of overheating, do not operate the treadmill continuously for longer than 1 hour.

11. The treadmill is capable of high speeds. Adjust the speed slowly to avoid sudden jumps in speed.

12. Use the treadmill only as described in this manual.

13. Always unplug the power cord before performing the maintenance and adjustment procedures described in this manual. Never remove the safety cover unless instructed to do so by an authorized service representative. Servicing other than the procedures in this manual should be performed by an authorized service representative only.

SAVE THESE INSTRUCTIONS

BEFORE YOU BEGIN

Thank you for selecting the SEARS LS ELITE 780 treadmill. The LS ELITE 780 treadmill blends advanced technology with innovative design to let you enjoy an excellent form of cardiovascular exercise in the convenience and privacy of your home.

For your safety and benefit, read this manual carefully before using the treadmill. If you have additional questions, please call our Customer Service Department toll-free at **1-800-999-3756**, Monday through Friday, 6 a.m. until 6 p.m. Mountain Time (excluding holidays). To help us assist you, please note the product model number and serial number before calling. The model number of the treadmill is 831.297541. The serial number can be found on a decal attached to the treadmill (see the front cover of this manual for the location).

Before reading further, please review the drawing below and familiarize yourself with the parts that are labeled.

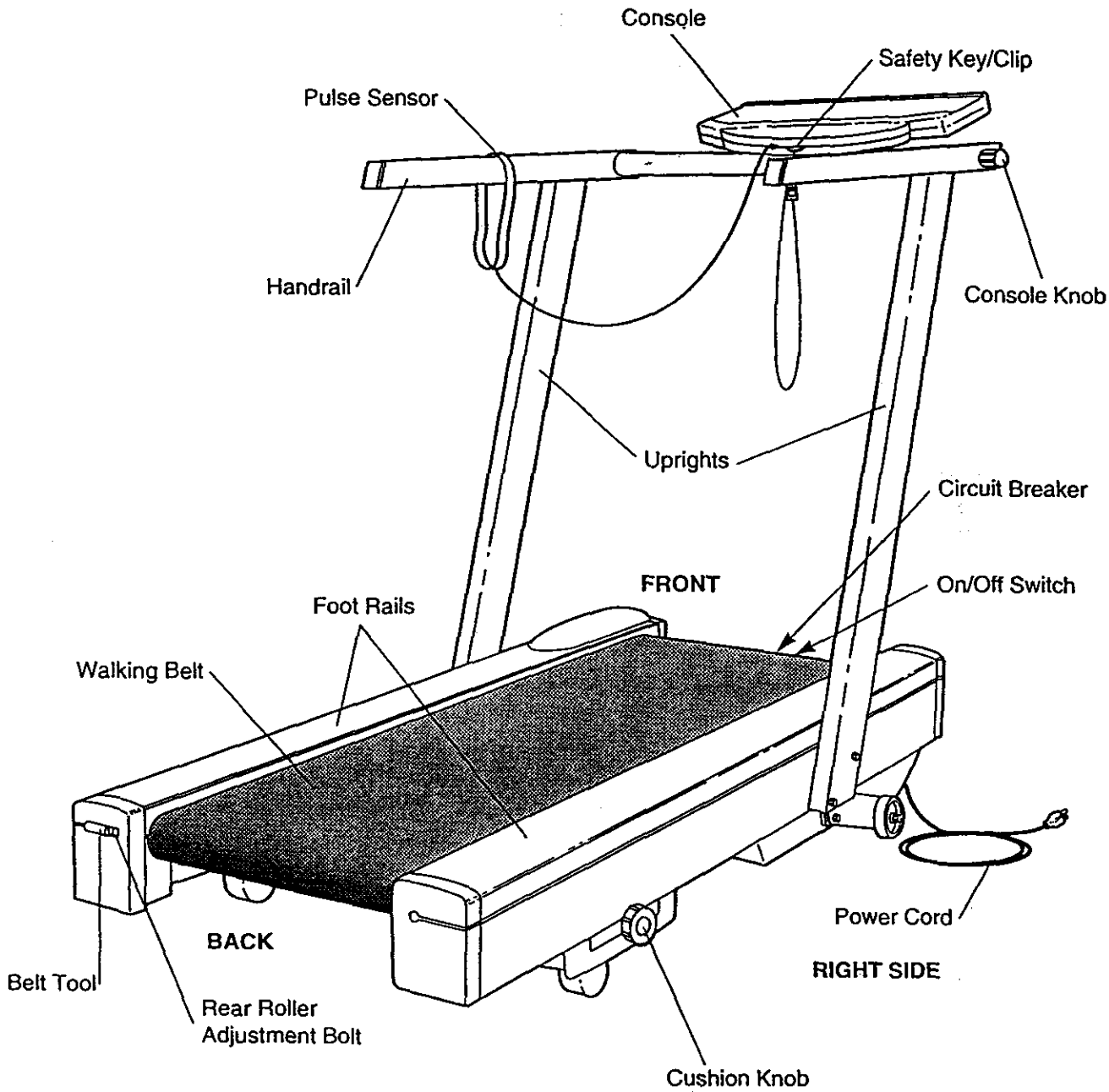

ASSEMBLY

Assembly requires the assistance of a second person. Set the treadmill in a cleared area and remove all packing materials. Do not dispose of the packing materials until assembly is completed. **THE FOLLOWING TOOLS ARE REQUIRED FOR ASSEMBLY: An adjustable wrench (not included).**

1. Find the Right Upright (15) (see the inset drawing to identify the Right Upright). Insert a 3/8" x 3 1/2" Bolt (27), with one of the four Upright Washers (26), into the higher hole in the bottom of the Right Upright. Slide one of the two Star Washers (107) onto the Bolt. **Finger tighten** the Bolt into the indicated hole in the side of the Frame (50). Hold an Upright Spacer (48) inside the bottom of the Right Upright. Insert a 3/8" x 3 1/2" Bolt (27), with an Upright Washer (26), through the lower hole in the bottom of the Right Upright and the Spacer. **Finger tighten** the Bolt into the indicated hole in the Frame.

   Attach the Left Upright (not shown) in the same manner.

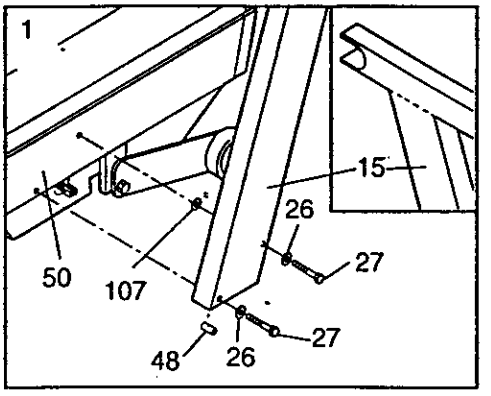

2. Hold the Console Crossbar (6) near the Right Upright (15). Connect the Console Wire Harness (10) to the Upright Wire Harness (12). The small latch on the Console Wire Harness should snap onto the Upright Wire Harness (see the inset drawing). If the Wire Harnesses do not fit easily, turn them; do not force the Wire Harnesses together.

   Adjust the 24" Cable Loom (11) and 6" Cable Loom (30) so that the ends of the Wire Harnesses (10, 12) are covered. Insert the Cable Looms into the Right Upright (15). **Be careful not to damage the Wire Harnesses.**

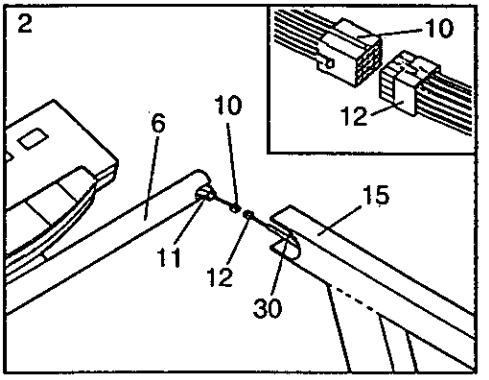

3. Slide the Console Crossbar (6) into the Right Upright (15). Rotate the Console Crossbar to the desired angle. Tighten a Console Knob (3) into the Console Crossbar.

   Push an Upright Endcap (4) into the end of the Right Upright (15).

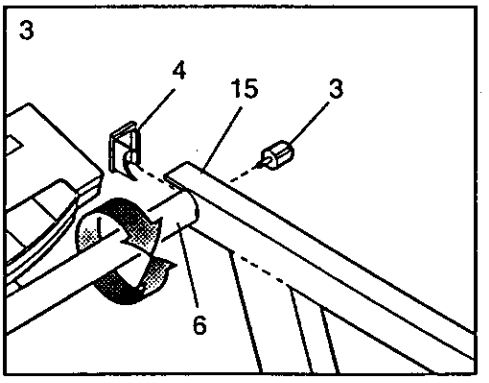

4. Slide the Console Crossbar (6) into the Left Upright (2). Tighten a Console Knob (3) into the Console Crossbar.

   Push an Upright Endcap (4) into the end of the Left Upright (2).

   Using an adjustable wrench, tighten the four 3/8" x 3 1/2" Bolts (27) used in assembly step 1 (see assembly step 1).

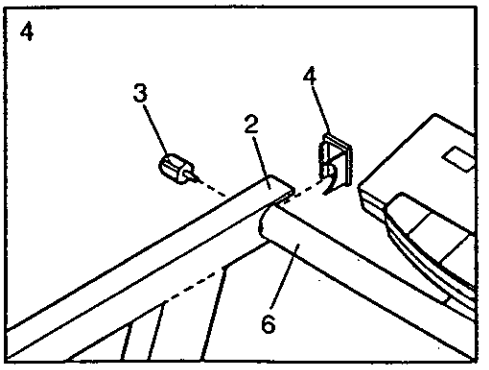

5. Plug the lower end of the Upright Wire Harness (12) into the 20" Wire Harness (45). The small latch on the Upright Wire Harness should snap onto the 20" Wire Harness (see the upper inset drawing). If the Wire Harnesses do not fit easily, turn them; do not force the Wire Harnesses together.

   Slide the ends of the two 6" Cable Looms (30) against the ends of the Wire Harnesses (45, 12) (see the lower inset drawing). **Be careful not to damage the Wire Harnesses.**

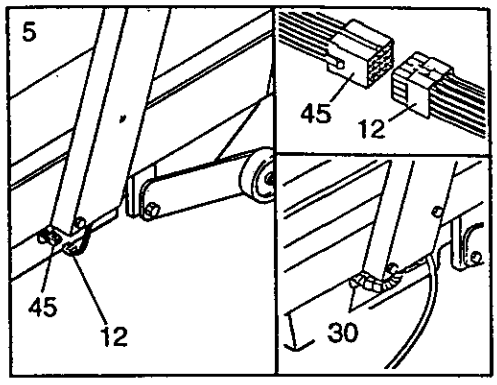

6. Press the Belt Tool (86) into the opening in the Left Rear Endcap (82). The Belt Tool is used to center the Walking Belt (see SYMPTOM 6 on page 14).

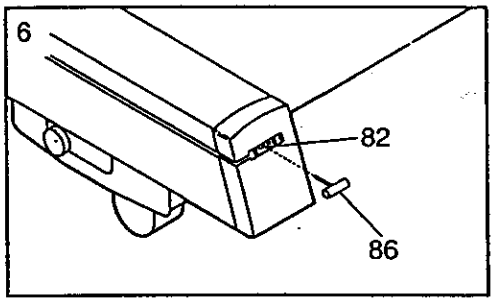

7. Press open the Clothes Clip (14), and insert the pulse earclip wire into the Clothes Clip. **Make sure that the pulse earclip wire is resting against the hinge of the Clothes Clip (see the inset drawing).** The use of the pulse sensor is explained on page 8.

Make sure that all parts are tightened before using the treadmill. **Note: The floor underneath the treadmill should be covered for protection.**

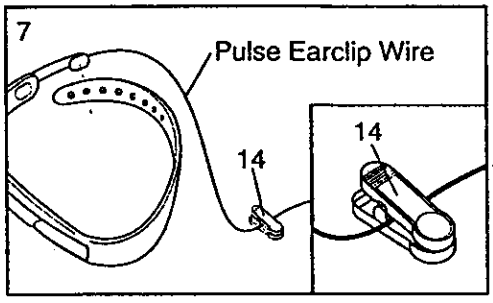

HOW TO USE THE PULSE SENSOR

The treadmill features a unique headband-style pulse sensor. The rubber-armored pulse sensor and lightweight headband are specially designed for greater accuracy, comfort and durability. **To get the best performance from the pulse sensor, please read the following instructions.**

HOW TO ADJUST THE HEADBAND

In order for the pulse sensor to function, the headband must be properly adjusted. The headband should fit snugly around your head, without being uncomfortable. To adjust the headband, slip it off the adjustment tab on the pulse sensor. Insert the adjustment tab through a different hole in the headband.

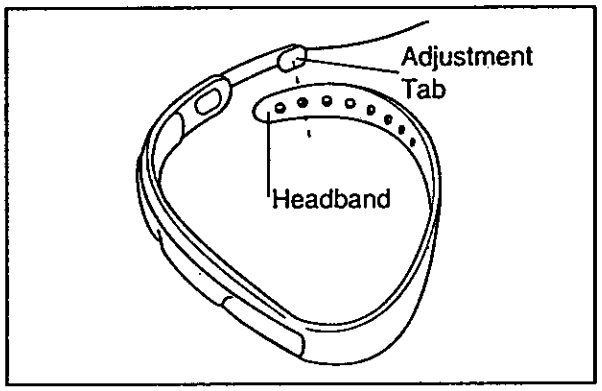

HOW TO PUT ON THE PULSE SENSOR

Rub your forehead for a moment to stimulate circulation. Put on the headband as shown below, with the sensor window centered on your forehead. Make sure that there is no hair between the sensor window and your forehead. **IMPORTANT: To avoid static build-up, the pulse sensor should be worn only while you are standing on the treadmill.**

Attach to the pulse sensor wire to your collar with the clothes clip. The clip will minimize movement of the wire, helping to ensure accurate pulse readings.

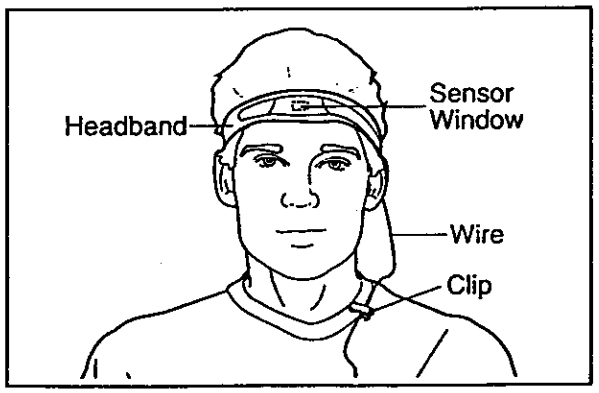

HOW TO OBTAIN ACCURATE PULSE READINGS

To learn how to use the pulse sensor with the console, see HOW TO USE THE PULSE DISPLAY on page 11. To ensure the best results, remember the following important guidelines:

- Before putting on the headband, rub your forehead for a moment to stimulate circulation.
- Make sure that the headband is properly adjusted. If the headband is too tight or too loose, your pulse may not be detected.
- The headband must be worn properly—the sensor window should be centered on your forehead, and there should be no hair between the sensor window and your forehead. Make-up applied to the forehead may also interfere with pulse readings.

  Note: If the pulse sensor does not function when the sensor window is centered on your forehead, try positioning the sensor window over your right or left eyebrow. Depending on the shape of your forehead, it may be easier to detect your pulse from a slightly different position.
- Make sure that the pulse sensor wire is fully plugged into the jack on the console.
- Avoid excessive head movement during exercise.
- Clean the sensor window about once each week when the treadmill is used regularly. Using a cotton swab moistened with water, carefully wipe the sensor window.
- Because your pulse constantly changes, the pulse sensor will sample and average your pulse every few seconds. When you first put on the pulse sensor, it may be necessary to wait for up to ten seconds before an accurate pulse is shown.

HOW TO CLEAN THE PULSE SENSOR

To clean the headband, first remove it from the pulse sensor. Hand wash the headband in mild detergent, and gently wring it out.

The pulse sensor can be wiped clean with a damp cloth; **never immerse the pulse sensor in water.**

OPERATION AND ADJUSTMENT

MAINTENANCE-FREE WALKING BELT

Your treadmill features a maintenance-free walking belt coated with PERFORMANT LUBE™, a high-performance lubricant. During the first few hours of use, it is normal for a small amount of white powder to appear on the foot rails and the walking platform. The white powder is high-performance lubricant from the walking belt.

IMPORTANT: Never apply silicone spray or other substances to the walking belt or the walking platform. They will deteriorate the walking belt and cause excessive wear.

HOW TO ADJUST THE CUSHION LEVEL OF THE LEGS

The legs at the back of the treadmill are designed to absorb shock as you walk or run on the treadmill. The cushion level of the legs can be adjusted to the level that is the most comfortable for you.

For a softer cushion level, turn the cushion knob counterclockwise (see the drawing below). For a firmer cushion level, turn the knob clockwise. Note: The faster you run on the treadmill, the firmer the cushion level should be. If the cushion level is too soft, the treadmill will bounce excessively.

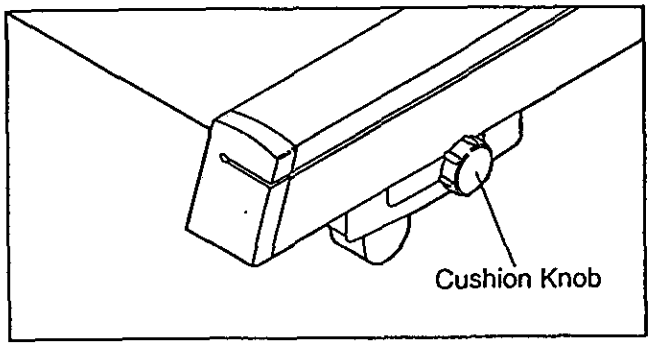

HOW TO PLUG IN THE POWER CORD

This product must be grounded. If it should malfunction or break down, grounding provides a path of least resistance for electric current to reduce the risk of electric shock.

This product is equipped with a cord having an equipment-grounding conductor and a grounding plug. **Plug the power cord into an appropriate outlet that is properly installed and grounded in accordance with all local codes and ordinances.**

⚠DANGER: Improper connection of the equipment-grounding conductor can result in a risk of electric shock. Check with a qualified electrician or serviceman if you are in doubt as to whether the product is properly grounded. Do not modify the plug provided with the product—if it will not fit the outlet, have a proper outlet installed by a qualified electrician.

This product is for use on a nominal 120-volt circuit, and has a grounding plug that looks like the plug illustrated in Drawing 1 below.

A temporary adapter that looks like the adapter illustrated in Drawing 2 may be used to connect this plug to a 2-pole receptacle as shown in Drawing 2 if a properly grounded outlet is not available. The temporary adapter should be used only until a properly grounded outlet (Drawing 1) can be installed by a qualified electrician. The green colored rigid ear, lug, or the like extending from the adapter **must be** connected to a permanent ground such as a properly grounded outlet box cover. Whenever the adapter is used it **must** be held in place by a metal screw.

Some 2-pole receptacle outlet box covers are not grounded. Contact a qualified electrician to determine if the outlet box cover is grounded before using an adapter.

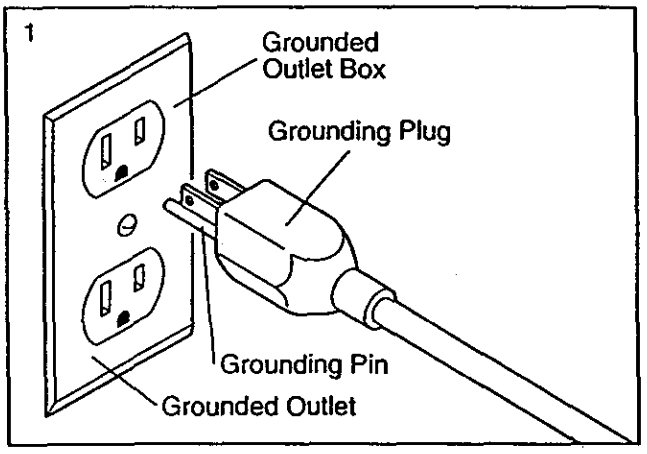

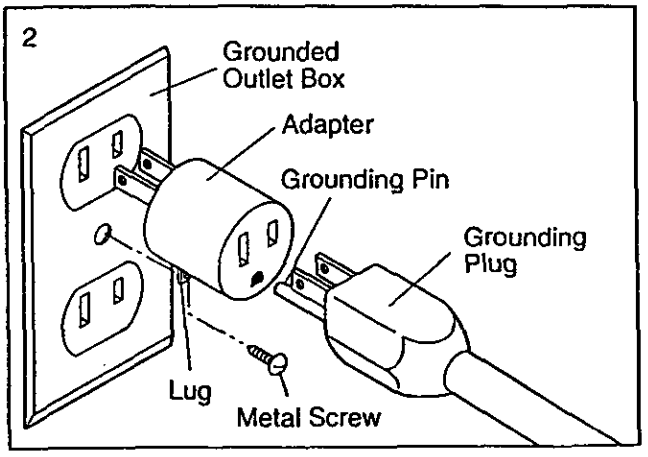

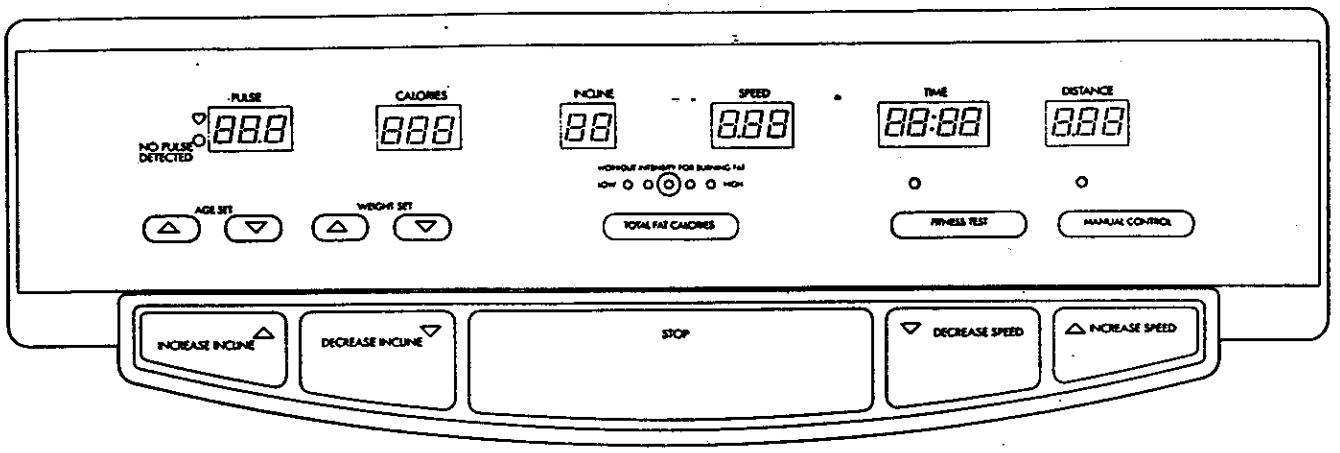

THE INTERACTIVE CONSOLE

The heart of the treadmill is the state-of-the-art interactive console. The console offers electronic speed and incline control, six independent displays, and a Fitness Test that measures your relative fitness level. In addition, a unique Fat Calorie Monitor is built into the console. During exercise, your body burns either *fat calories* or *carbohydrate calories*, depending on the intensity of your exercise. If your goal is to burn fat, it is essential that you exercise at the proper intensity level. The Fat Calorie Monitor will constantly monitor your workout, and show you when your intensity level is too low, too high or perfect for burning fat. **CAREFULLY READ THESE INSTRUCTIONS BEFORE OPERATING THE CONSOLE.** Note: If there is a thin sheet of clear plastic on the face of the console, peel it off before operating the console.

HOW TO ADJUST THE ANGLE OF THE CONSOLE

The angle of the console can be adjusted for easy viewing. First, loosen the knob on each side of the console. Rotate the console to the desired angle and retighten the knobs.

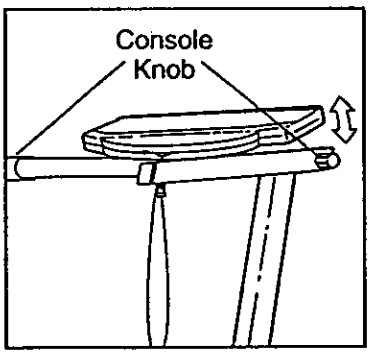

HOW TO TURN ON THE POWER

Make sure that the safety key is removed from the console, and that the on/off switch near the power cord is in the "on" position. Plug in the power cord (see HOW TO PLUG IN THE POWER CORD on page 9). All displays and indicators will flash three times. *Note: If the safety key is in the console when the power cord is plugged in, the letters "PO" will flash in the SPEED display. If this occurs, simply remove the safety key.*

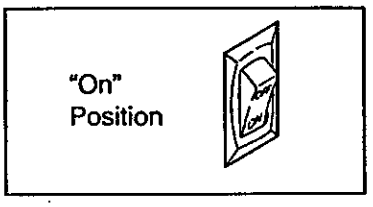

Stand on the foot rails of the treadmill. Find the clip attached to the safety key, and slide the clip onto the waistband of your clothing.

⚠WARNING: Do not stand on the walking belt when turning on the power or starting the walking belt. Always wear the clip while operating the treadmill.

Insert the safety key into the console. The "NO PULSE DETECTED" indicator, the MANUAL CONTROL indicator, and the six displays will light. The PULSE display will flash the current age setting three times, and the CALORIES display will flash the current weight setting three times. (If age and weight settings have never been entered into the console, the PULSE display will flash the letters "AGE" three times, and the CALORIES display will flash the letters "LBS" (pounds) three times.

HOW TO ENTER YOUR AGE AND WEIGHT

For the console to measure calories accurately, and for the Fat Calorie Monitor and the Fitness Test to function properly, your age and weight must be entered into the console.

To enter your age, press one of the AGE SET buttons. The current age setting will be shown in the PULSE display. Press the AGE SET buttons to enter your age. Each time one of the buttons is pressed, the age setting will change by 1 year. If the buttons are held down, the age setting will change in increments of 5 years. After you have entered your age, press one of the WEIGHT SET buttons. The current weight setting will be shown in the CALORIES display. Press the WEIGHT SET buttons to enter you weight. Each time one of the buttons is pressed, the weight setting will change by 1 pound. If the buttons are held down, the weight setting will change in increments of 5 pounds.

Once you have entered your age and weight, the num-

bers will be retained in the console's memory, even if the power cord is unplugged. The numbers can be changed, if desired, by pressing the AGE SET or WEIGHT SET buttons.

HOW TO MANUALLY CONTROL THE SPEED

When the power is turned on, the console will be in the MANUAL CONTROL mode. For your safety, the walking belt will be stationary. The speed range of the walking belt is 0.5 to 8 miles per hour.The speed is controlled with the SPEED buttons. Each time the INCREASE SPEED button is pressed, the speed will increase by 0.1 mph. Each time the DECREASE SPEED button is pressed, the speed will decrease by 0.1 mph. The buttons can be held down to change the speed rapidly.

⚠ WARNING: After the SPEED buttons are pressed, it will take a moment for the walking belt to reach the selected speed setting. Adjust the speed gradually until you are familiar with the treadmill.

Press the INCREASE SPEED button until the walking belt begins to move at slow speed. Hold the handrails, step carefully onto the walking belt, and begin exercising. Change the speed as desired by pressing the SPEED buttons. To stop the walking belt, press the STOP button.

HOW TO MANUALLY CONTROL THE INCLINE

To vary the intensity of your exercise, the incline of the treadmill can be changed. The incline range of the treadmill is 1% to 12%. The incline is controlled with the INCLINE buttons. Each time one of the buttons is pressed, the incline will change by 0.5%. The buttons can be held down to change the incline rapidly. Note: Because the INCLINE display has two digits, the display will show 10% when the incline is set at either 10% or 10.5%, and 11% when the incline is set at either 11% or 11.5%.

Note: After the INCLINE buttons are pressed, it will take a few seconds for the treadmill to reach the selected incline setting.

HOW TO USE THE PULSE DISPLAY

To measure your pulse, first put on the pulse sensor (see HOW TO USE THE PULSE SENSOR on page 8). Plug the pulse sensor wire into the jack on the front of the console.

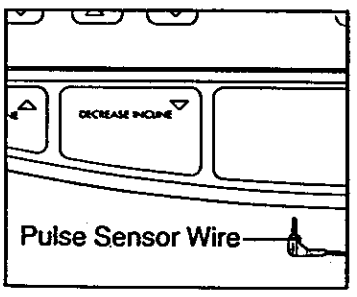

After a few seconds, the heart-shaped pulse indicator will flash each time your heart beats, the "NO PULSE DETECTED" indicator will darken, and your pulse will be shown. *Note: Because your pulse constantly changes, the pulse sensor will measure and average your pulse every few seconds. When you first put on the pulse sensor, it may take several seconds before an accurate pulse is displayed.* If your pulse is not shown, see HOW TO OBTAIN ACCURATE PULSE READINGS on page 8.

HOW TO USE THE CALORIES DISPLAY

For the CALORIES display to be accurate, your age and weight must be entered into the console. If your age and weight have not been entered, see HOW TO ENTER YOUR AGE AND WEIGHT on page 10. The CALORIES display will show the total number of calories that you have burned. To find the number of *fat calories* that you have burned, press the TOTAL FAT CALORIES button. The number of fat calories that you have burned will be shown for three seconds.

INCLINE DISPLAY OPERATION

The INCLINE display will show the incline level that has been selected.

SPEED DISPLAY OPERATION

The SPEED display will show the speed setting that has been selected.

TIME DISPLAY OPERATION

The TIME display will show the total time that the walking belt has been moving. Note: If the Fitness Test is selected, the display will be reset to zero. The display will be reset again when the Fitness Test is completed.

DISTANCE DISPLAY OPERATION

The DISTANCE display will show the total distance that you have walked or run, in miles. Note: If the Fitness Test is selected, the display will be reset to zero. The display will be reset again when the Fitness Test is completed.

HOW TO USE THE FAT CALORIE MONITOR

The Fat Calorie Monitor is designed to help you maintain the proper workout intensity level for burning fat. For the Fat Calorie Monitor to operate properly, your age and weight must be entered into the console. If your age and weight have not been entered, see HOW TO ENTER YOUR AGE AND WEIGHT on page 10. In addition, the pulse sensor must be used (see HOW TO USE THE PULSE DISPLAY on this page).

When the Fat Calorie Monitor is activated, one of the five indicators in the center of the console will light. The two red indicators on the left indicate that your intensity level is too low for burning fat effectively. The two red indicators on the right indicate that your intensity level is too high for burning fat effectively. When your intensity level is perfect for burning fat, the green indicator in the center will light. As you exercise, simply adjust the speed of the walking belt and the incline of the treadmill so that the green indicator remains lit. *NOTE: After adjusting the speed or incline, wait for about two minutes for your pulse to respond before adjusting the speed or incline again.*

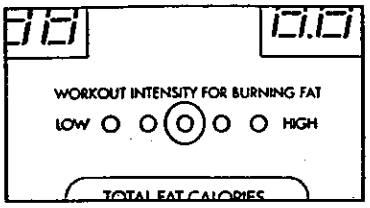

HOW TO USE THE FITNESS TEST

The Fitness Test is designed to measure your relative fitness level. For the best results, the Fitness Test should be taken at a time of day when your energy level is high. The Fitness Test should not be taken after you have already exercised during the day.

The Fitness Test consists of seven 3-minute segments. The console will automatically control the incline of the treadmill and the speed of the walking belt during the Fitness Test. During the first segment, the incline will be at 2%, and the speed will be at 1.5 mph; at the beginning of the second segment, the incline will increase to 3%, and the speed will increase to 2.5 mph; at the beginning of the third segment, the speed will increase to 3.3 mph; at the beginning of the fourth segment, the incline will increase to 6%; at the beginning of the fifth segment, the incline will increase to 9%; at the beginning of the sixth segment, the incline will increase to 12%; at the beginning of the seventh segment, the speed will increase to 4 mph.

Follow the instructions below to use the Fitness Test.

1. PRESS THE FITNESS TEST BUTTON

When the FITNESS TEST button is pressed, the PULSE display will flash the current age setting three times, and the CALORIES display will flash the current weight setting three times. For the Fitness Test to operate properly, your age and weight must be entered into the console. If your age and weight have not been entered, see HOW TO ENTER YOUR AGE AND WEIGHT on page 10.

When the Fitness Test button is pressed, the INCLINE display will show that the treadmill is at an incline level of 2%. The CALORIES, SPEED, TIME and DISTANCE displays will be reset to zero. *Note: While the Fitness Test is selected, only the STOP and MANUAL MODE buttons will function.*

2. PUT ON THE PULSE SENSOR

See HOW TO USE THE PULSE DISPLAY on page 11. If your pulse is not detected, the letters "PLS" will flash in the PULSE display.

3. PRESS THE FITNESS TEST BUTTON

To start the Fitness Test, stand on the foot rails of the treadmill and press the FITNESS TEST button. The first segment of the Fitness Test will begin, and the walking belt will begin to move at 1.5 mph. Step onto the walking belt and begin exercising. After three minutes, the second segment will begin, the incline will increase to 3%, and the speed will increase to 2.5 mph. The Fitness Test will continue in this manner *until your pulse reaches 70% of your maximum heart rate, and the current segment is completed. The walking belt will then slow to a stop, and the Fitness Test will be completed, regardless of how many segments remain.*

Your fitness level will be shown in the TIME display. There are ten fitness levels—fitness level 1 (FL 1) is the lowest, and fitness level 10 (FL10) is the highest. *Remember, the Fitness Test is intended only to indicate your relative fitness level, and to show your progress over a period of time.*

If your pulse is not detected during the last thirty seconds of any segment, the walking belt will slow to a stop and the TIME display will show "FL 0," indicating that an error has occurred. If you wish to stop the walking belt while the Fitness Test is in progress, press the STOP button. The console will then be in the MANUAL CONTROL mode.

HOW TO TURN OFF THE POWER

To turn off the power, remove the safety key from the console. All indicators and LED displays will darken. Store the safety key in a secure location.

HOW TO SELECT THE INFORMATION MODE

The console features an information mode that keeps track of trip time and distance, as well as the total time and distance that the treadmill has been operated. To select the information mode, hold down the STOP button while inserting the safety key into the console.

The SPEED display will show the letter "T," indicating that trip time and distance are shown. The trip time will be shown in the TIME display. The trip distance will be shown in the DISTANCE display. The trip time and distance can be reset to zero, if desired, by pressing the WEIGHT SET DECREASE button.

To view total time and distance, press the FITNESS TEST button. The letter "T" in the SPEED display will darken. The total time will be shown in the TIME display, up to 9,999 hours. The total distance will be shown in the DISTANCE display, up to 999 miles (if the total distance exceeds 999 miles, the display will begin again at zero). The total time and distance cannot be reset to zero.

To exit the information mode, remove the safety key.

TROUBLE-SHOOTING AND STORAGE

Most treadmill problems can be solved by following the simple steps below. Find the symptom that applies, and follow the steps listed. If further assistance is needed, call our Customer Service Department toll-free at 1-800-999-3756, Monday through Friday, 6 a.m. until 6 p.m. Mountain Time.

1. SYMPTOM: THE POWER DOES NOT TURN ON

   a. Make sure that the power cord is plugged into a properly grounded outlet. (See HOW TO PLUG IN THE POWER CORD on page 9.) If an extension cord is needed, use only a 14-gauge general-purpose cord of five feet or less in length.

   b. After the power cord has been plugged in, make sure that the safety key is fully inserted into the console. Various indicators on the console should light. (See HOW TO TURN ON THE POWER on page 10.)

   c. Check the circuit breaker located on the treadmill near the power cord. If the switch protrudes as shown, the circuit breaker has tripped. To reset the circuit breaker, wait for five minutes and then press the switch back in.

   d. Check the On/Off switch located at the front of the treadmill near the power cord. The switch must be in the On position.

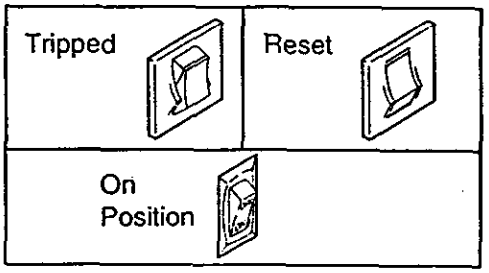

2. SYMPTOM: THE POWER TURNS OFF DURING USE

   a. Check the circuit breaker located on the treadmill near the power cord. If the circuit breaker has tripped (see the drawing above.), wait for five minutes and then press the switch back in.

   b. Make sure that the power cord is plugged in.

   c. Remove the safety key from the console. Reinsert the safety key fully into the console. Various indicators on the console should light.

   d. Check to make sure the On/Off switch is in the On position. (See 1. d. above.)

   e. If the treadmill still will not run, please call our Customer Service Department.

3. SYMPTOM: THE PULSE SENSOR DOES NOT FUNCTION PROPERLY

   a. See HOW TO USE THE PULSE SENSOR on page 8.

4. SYMPTOM: THE CONSOLE DOES NOT FUNCTION PROPERLY

   a. If a console malfunction occurs, an error code ("E1," "E2," "E3," etc.) may appear on the display. If an error code appears, remove the safety key, wait for ten seconds and then reinsert the safety key. If an error code appears again, call our Customer Service Department. Do not operate the treadmill until the problem is corrected.

5. SYMPTOM: THE WALKING BELT SLOWS WHEN WALKED ON

   a. If an extension cord is needed, use only a 14-gauge general-purpose cord of five feet or less in length.

   b. If the walking belt still slows when walked on, please call our Customer Service Department.

6. SYMPTOM: THE WALKING BELT IS OFF-CENTER WHEN WALKED ON

   a. If the walking belt has shifted to the left, first remove the safety key and **UNPLUG THE POWER CORD.** Using the belt tool, turn the rear roller adjustment bolt clockwise 1/4 of a turn. Plug in the power cord, insert the safety key and run the treadmill for a few minutes. Repeat until the walking belt is centered.

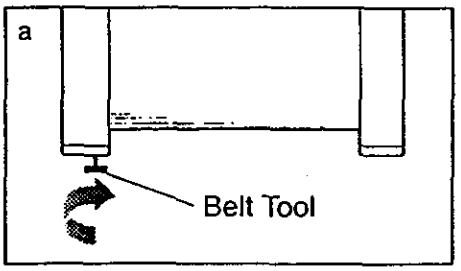

b. If the walking belt has shifted to the right, first remove the safety key and **UNPLUG THE POWER CORD**. Using the belt tool, turn the rear roller adjustment bolt counterclockwise 1/4 of a turn. Plug in the power cord, insert the safety key and run the treadmill for a few minutes. Repeat until the walking belt is centered.

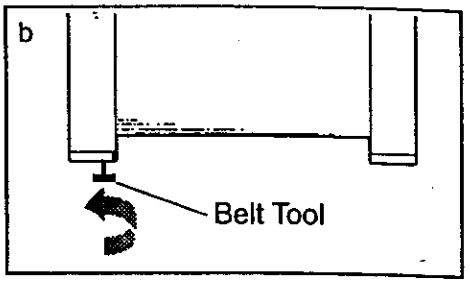

STORAGE

Unplug the power cord when the treadmill is not in use. Remove one bolt, washer and upright spacer from the lower ends of the left and right uprights. Loosen the other bolt on each side. Carefully lay the console on the treadmill. Keep the bolts and washers in a secure location.

It is recommended that the treadmill be covered during extended periods of storage.

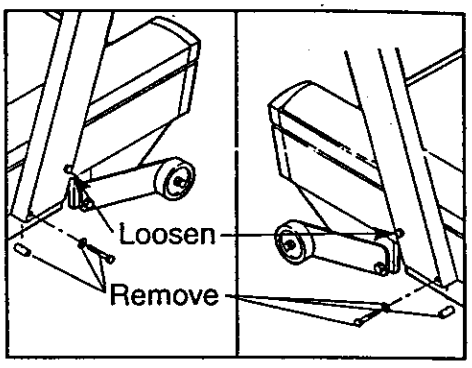

CONDITIONING GUIDELINES

The following guidelines will help you to plan your exercise program. Remember that proper nutrition and adequate rest are essential for successful results.

⚠WARNING: Before beginning this or any exercise program, consult your physician. This is especially important for individuals over the age of 35 or individuals with pre-existing health problems.

EXERCISE INTENSITY

To maximize the benefits of exercising, it is important to exercise with the proper intensity. The proper intensity level can be found by using your heart rate as a guide. For effective aerobic exercise, your heart rate should be maintained at a level between 70% and 85% of your maximum heart rate as you exercise. This is known as your training zone. You can find your training zone in the table below.

AGE	UNCONDITIONED TRAINING ZONE (BEATS/MIN	CONDITIONED TRAINING ZONE (BEATS/MIN
20	138-167	133-162
25	136-166	132-160
30	135-164	130-158
35	134-162	129-156
40	132-161	127-155
45	131-159	125-153
50	129-156	124-150
55	127-155	122-149
60	126-153	121-147
65	125-151	119-145
70	123-150	118-144
75	122-147	117-142
80	120-146	115-140
85	118-144	114-139

During the first few months of your exercise program, keep your heart rate near the low end of your training zone as you exercise. After a few months of regular exercise, your heart rate can be increased gradually until it is near the middle of your training zone as you exercise.

You can measure your heart rate using the pulse sensor. Exercise for at least four minutes, and then measure your heart rate immediately. If your heart rate is too high, decrease the intensity of your exercise. If your heart rate is too low, increase the intensity of your exercise.

⚠WARNING: The pulse sensor is not a medical device. Various factors, including your movement during exercise, may affect the accuracy of heart rate readings. The sensor is intended only as an exercise aid in determining heart rate trends in general.

WORKOUT GUIDELINES

Each workout should consist of three basic parts: a warm-up, 20 to 30 minutes of training zone exercise, and a cool-down. Warming up prepares the body for exercise by increasing circulation, delivering more oxygen to the muscles and raising the body temperature. Begin each workout with 5 to 10 minutes of stretching and light exercise to warm up. Then, increase the intensity of your exercise to raise your heart rate to your training zone for 20 to 30 minutes. Breathe regularly and deeply as you exercise—never hold your breath. Finish each workout with 5 to 10 minutes of stretching to cool down. This will increase the flexibility of your muscles as well as help to decrease soreness and other post-exercise problems.

To maintain or improve your condition, plan three workouts each week, with at least one day of rest between workouts. After a few months of regular exercise, you may complete up to five workouts each week, if desired.

The key to success is to make exercise a regular and enjoyable part of your everyday life.

SUGGESTED STRETCHES

The following stretches can provide a good warm-up or cool-down. Correct form for each stretch is shown in the drawings below. Move slowly as you stretch—never bounce.

TOE TOUCH STRETCH

Stand with your knees bent slightly and slowly bend forward from your hips. Allow your back and shoulders to relax as you reach down toward your toes as far as possible. Hold for 15 counts, then relax. Repeat 3 times.

Stretches: Hamstrings, back of knees and back.

HAMSTRING STRETCH

Sit with one leg extended. Bring the sole of the opposite foot toward you and rest it against the inner thigh of your extended leg. Reach toward your toes as far as possible. Hold for 15 counts, then relax. Repeat 3 times for both legs.

Stretches: Hamstrings, lower back and groin.

CALF/ACHILLES STRETCH

With one leg in front of the other, reach forward and place your hands against a wall. Keep your back leg straight and your back foot flat on the floor. Bend your front leg, lean forward and move your hips toward the wall. Hold for 15 counts, then relax. Repeat 3 times for both legs. To cause further stretching of the achilles tendons, bend your back leg as well.

Stretches: Calves, achilles tendons and ankles.

QUADRICEPS STRETCH

With one hand against a wall for balance, reach back and grasp one foot with your other hand. Bring your heel as close to your buttocks as possible. Hold for 15 counts, then relax. Repeat 3 times for both legs.

Stretches: Quadriceps and hip muscles.

INNER THIGH STRETCH

Sit with the soles of your feet together and your knees outward. Pull your feet toward your groin area as far as possible. Hold for 15 counts, then relax. Repeat 3 times.

Stretches: Quadriceps and hip muscles.

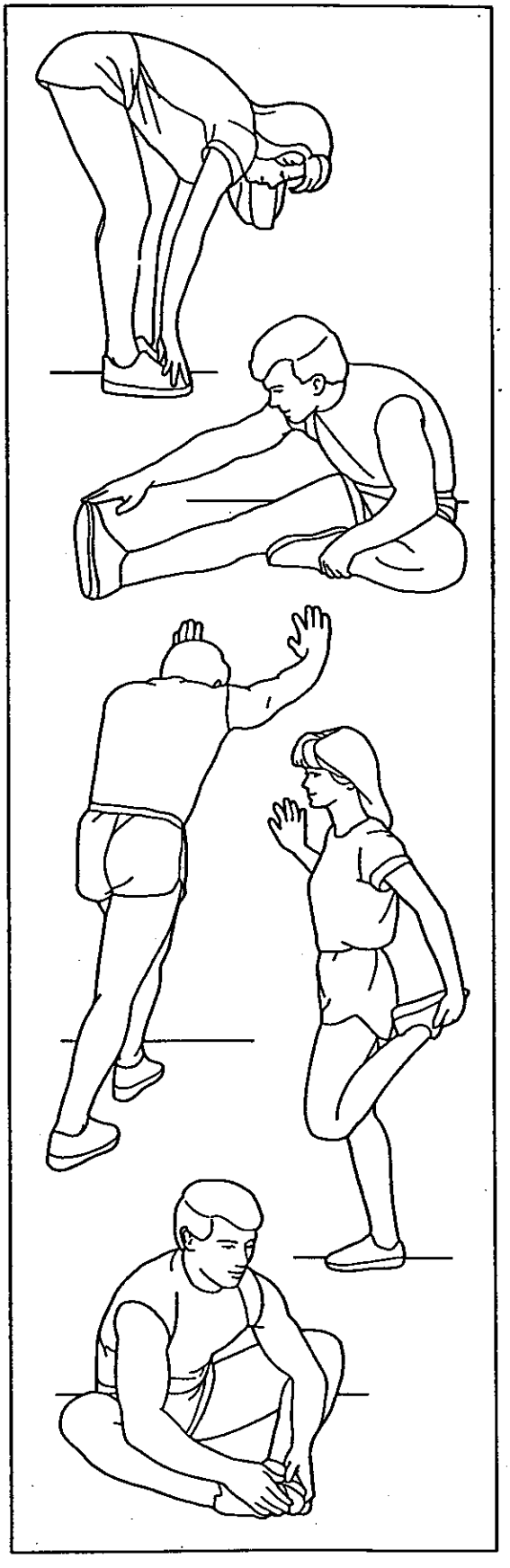

THE TWO BLACK PLASTIC SPACERS ARE REQUIRED IN STEP 1 OF THE ASSEMBLY OF THE UPRIGHTS TO THE TREADMILL FRAME, PAGE 6 OF THE OWNERS MANUAL. THEY ARE TO BE USED IN THE LOWER HOLES ONLY AND PLACED INSIDE THE RIGHT UPRIGHT TUBE (15) AND LEFT UPRIGHT TUBE (2), WHILE INSERTING THE 3/8" x 3-1/2" BOLT (27) THROUGH THE LOWER HOLES & THE SPACER.

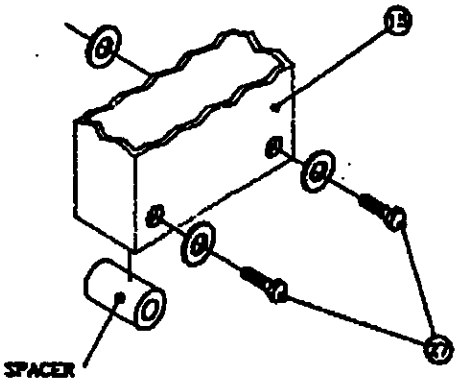

PART LIST—Model No. 831.297541

R1194A

Key No.	Part No.	Qty.	Description
1	120554	2	Endcap
2	120202	1	Left Upright
3	120244	2	Console Knob
4	120245	2	Upright Endcap
5	111869	6	Cage Nut
6	120203	1	Console Crossbar
7	120489	1	Wire Cover
8	013141	7	Console Screw
9	120769	1	Console
10	120552	1	Console Wire Harness
11	117988	1	24" Cable Loom
12	123086	1	Upright Wire Harness
13	119038	1	Safety Key/Clip
14	121078	1	Pulse Sensor/Clothes Clip
15	120239	1	Right Upright
16	031229	1	Power Cord
17	109382	1	Circuit Breaker
18	019084	1	Grommet
19	119163	1	On/Off Switch
20	119014	1	Front Left Endcap
21	120774	1	Front Roller/Pulley
22	112609	1	Front Roller Adj. Bolt
23	014127	5	Roller Adj. Washer
24	119015	1	Front Right Endcap
25	013162	23	Safety Cover Screw
26	014132	4	Upright Washer
27	120003	4	3/8" x 3 1/2" Bolt
28	120311	1	Power Board-Controller Wire
29	115468	2	Belt Guide
30	113203	2	6" Cable Loom
31	117806	2	Wheel Bolt
32	108080	8	Screw
33	120243	1	Right Rear Belt Tension Bolt
34	123308	1	Electronics Bracket
35	107503	1	Motor Swivel Bolt
36	119026	1	Bracket
37	012056	6	Wheel Nut/ Cushion Foot Nut
38	120767	1	Controller
39	119416	1	Safety Cover Bracket
40	052014	2	Front Wheel
41	013547	3	Leg Bolt/Motor Tension Bolt
42	012149	5	Leg Nut/Motor Tension Nut
43	119020	1	Incline Leg
44	120729	1	Power Board
45	119769	1	20" Wire Harness
46	015071	4	Power Board Stand-Off
47	121728	2	Cushion Foot Cover
48	122332	2	Upright Spacer
49	014157	1	Switch Star Washer
50	NSP	1	Frame
51	120195	1	Front Safety Cover
52	123366	1	Rear Safety Cover
53	120491	1	Right Foot Rail
54	122945	1	Walking Belt
55	120241	1	Adj. Bolt Guide
56	122329	2	Deck Shim
57	120242	1	Belt Tension Spring
58	120492	1	Cushion Foot Rod
59	013028	6	Endcap Screw
60	012096	1	Spring Nut
61	102633	2	Optic Switch Wire Harness
62	102959	2	Small Bolt
63	102955	2	Optic Switch
64	012152	2	Small Nut
65	109370	1	Incline Optic Switch
66	116892	1	Incline Motor Bracket
67	119375	2	Incline Motor Bolt
68	122116	1	Incline Motor
69	114270	1	Incline Motor Spacer
70	120481	1	Bar Endcap
71	120483	2	Cushion Foot Insert
72	122202	2	Foot Rail Bracket
73	110926	4	Cushion Foot Bolt
74	119017	1	Right Rear Endcap
75	115046	2	Cushion Foot
76	016029	2	4" Cable Tie
77	016057	5	8" Cable Tie
78	013206	1	Left Rear Belt Tension Bolt
79	116927	1	Tie Block
80	121204	4	Front Endcap Screw
81	119296	1	Cable Tie
82	119016	1	Left Endcap
83	120775	1	Rear Roller
84	122205	1	Walking Platform
85	119779	8	Platform Screw
86	120844	1	Belt Tool
87	120866	5	Electronics Screw
88	120482	1	Cushion Knob
89	122196	1	Left Foot Rail
90	120867	1	Motor Tension Nut
91	122644	1	Motor Mounting Bracket
92	113278	1	Pulley/Flywheel/Fan
93	106939	1	Motor Belt
94	100994	2	Motor Bolt
95	120740	1	Motor
96	120197	1	Speed Disk
97	120653	1	Optic Switch Bracket
98	122125	1	Optic Switch Bracket Nut
99	105477	2	Motor Nut
100	014086	2	Flat Washer
101	121375	1	Red Headband
102	121617	1	Video Cassette
103	122331	2	Rod Sleeve
104	122926	1	Blue Headband
105	104188	2	Cover Washer
106	122812	1	Motor Tension Washer
107	014117	2	Star Washer
#	101799	1	9" Black Wire, Male/Female
#	107771	1	8" White Wire, Male/Female
#	101897	1	14" White Wire, 2 Female
#	109407	1	4" Black Wire, 2 Female
#	101951	1	8" Black Wire, 2 Female
#	102634	1	8" Green Ground Wire
#	118201	1	8" Red Wire, Male/Female
#	112083	1	8" Blue Wire, 2 Female
#	122133	1	Owner's Manual

Note: "#" indicates a non-illustrated part. **Specifications are subject to change without notice.**

EXPLODED DRAWING—Model No. 831.297541

R1194A

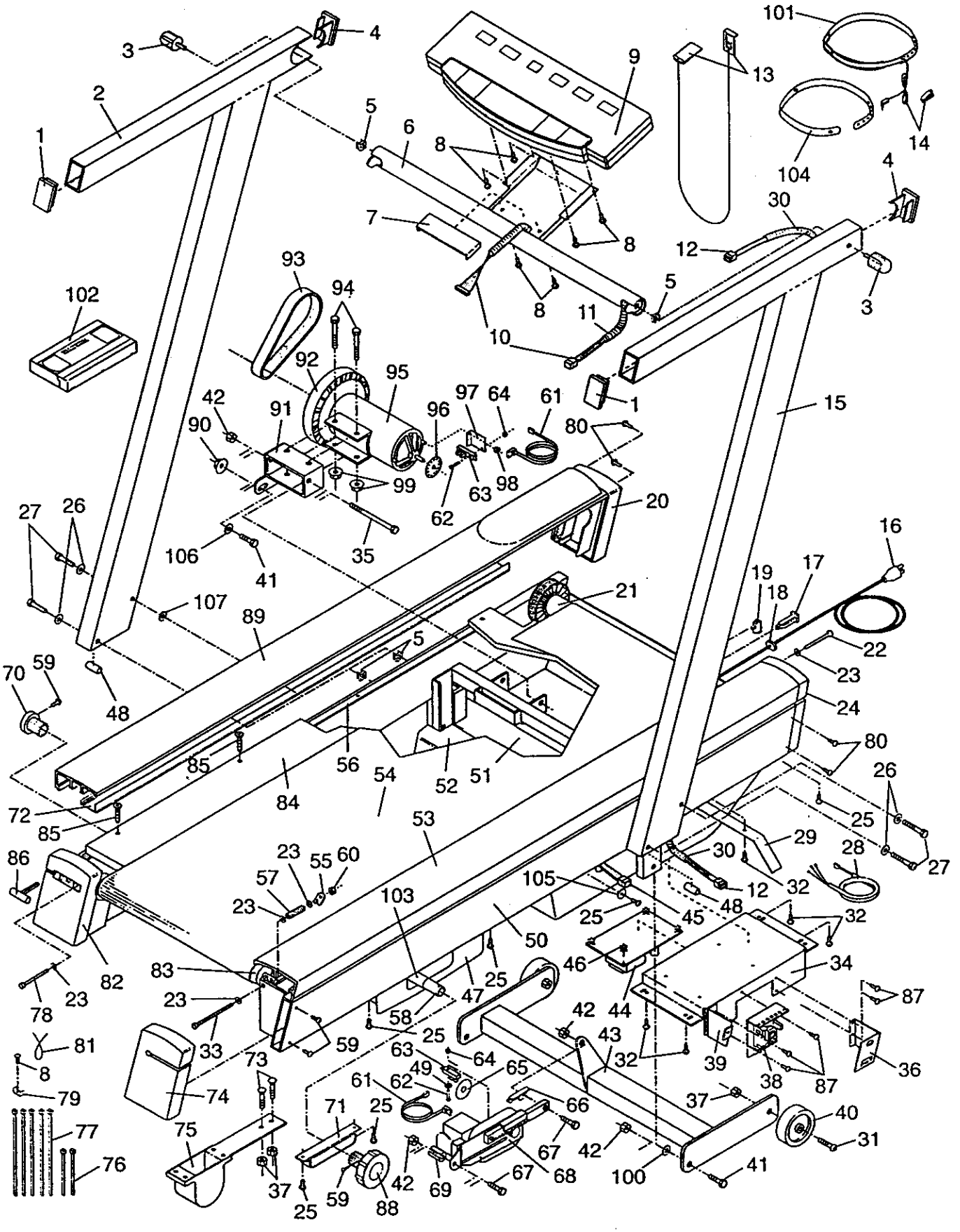

ORDERING REPLACEMENT PARTS

Each TREADMILL has its own MODEL NUMBER. Always mention this MODEL NUMBER when requesting service or repair parts for your TREADMILL.

All parts listed herein can be ordered through SEARS, ROEBUCK AND CO. SERVICE CENTERS and most SEARS RETAIL STORES. If parts you need are not stocked locally, your order will be transmitted to a SEARS PARTS DISTRIBUTION CENTER for handling.

WHEN ORDERING REPAIR PARTS, ALWAYS GIVE THE FOLLOWING INFORMATION:

- The MODEL NUMBER of the product (831.297541).
- The NAME of the product (SEARS LS ELITE 780 treadmill).
- The PART NUMBER of the part(s) from page 18 of this owner's manual.
- The DESCRIPTION of the part(s) from page 18 of this owner's manual.

Your SEARS TREADMILL has added value when you consider that SEARS has service units nationwide, staffed with SEARS trained technicians specifically trained on SEARS products, having the parts, tools and equipment to ensure that we meet our pledge to you: "We service what we sell."

Should you ever need repair service or parts, call toll free:

For repair service: **1-800-4-REPAIR** (1-800-473-7247)

For repair parts: **1-800-FON-PART** (1-800-366-7278)

Part No. 122133 R1194A Printed in USA

© 1994 Sears, Roebuck and Co.