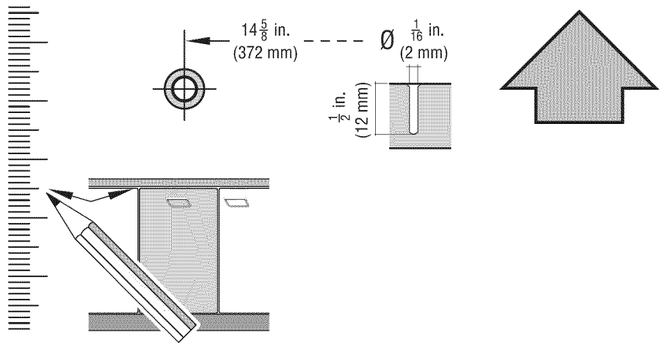

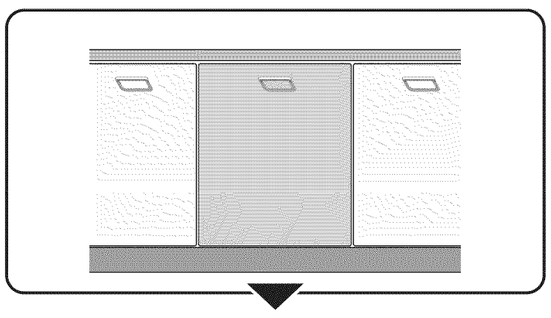

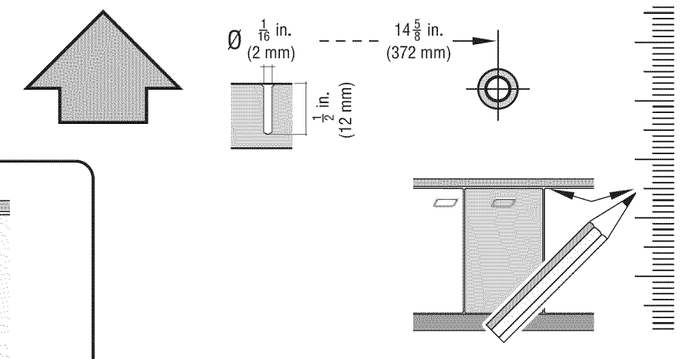

GV 450 V - 81 - KL - US 9000 544 518 (9003)

de Montageanweisung
en Assembly Instructions
fr Instructions de montage
es Instrucciones de montaje

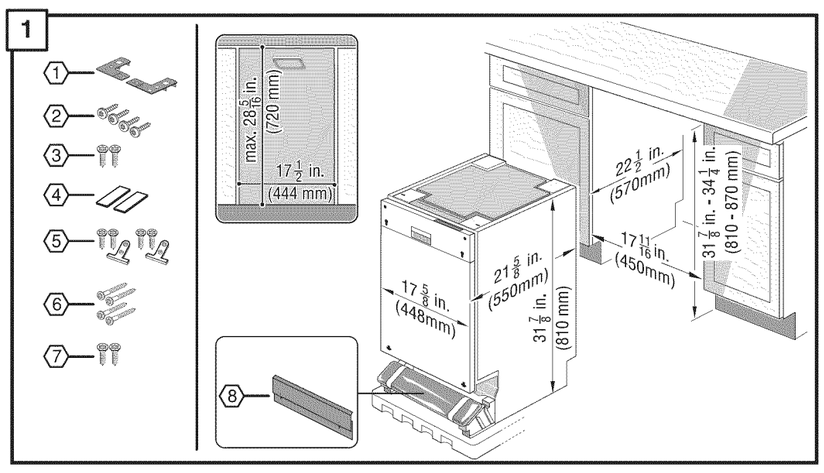

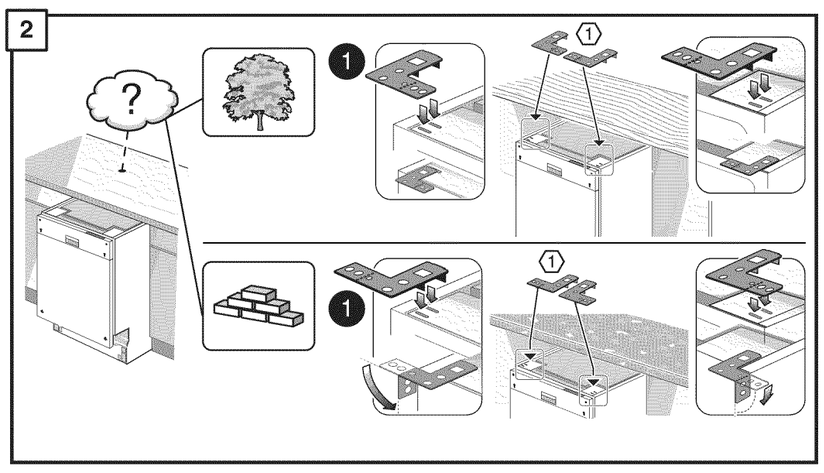

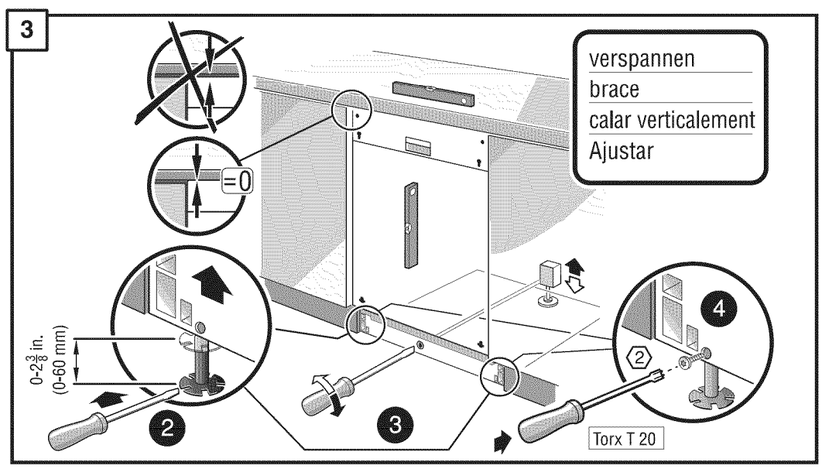

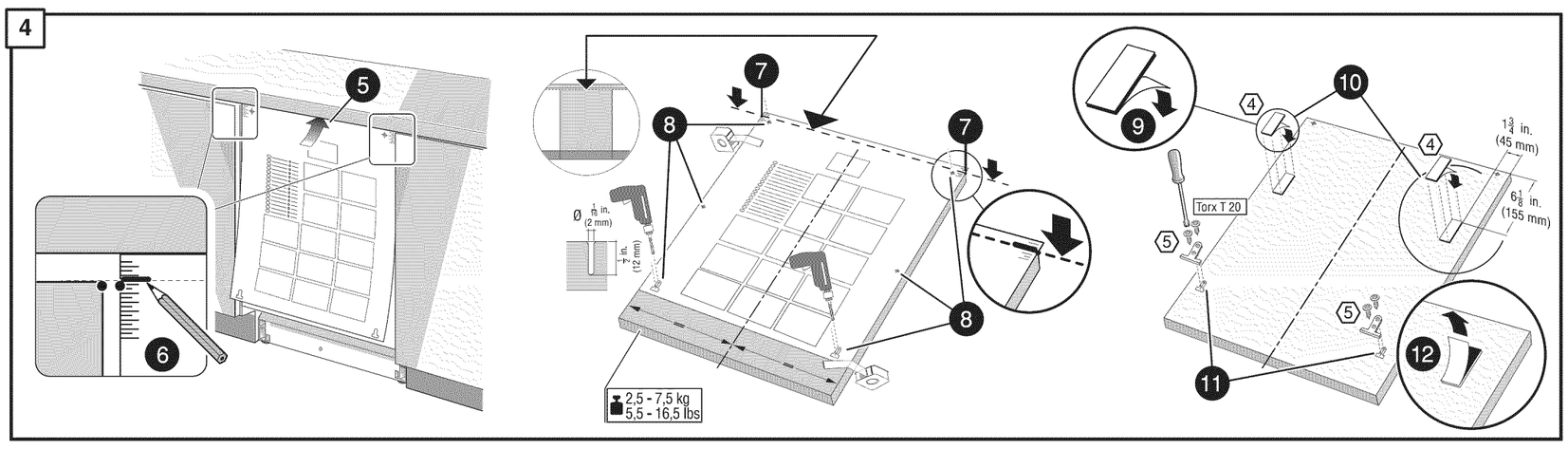

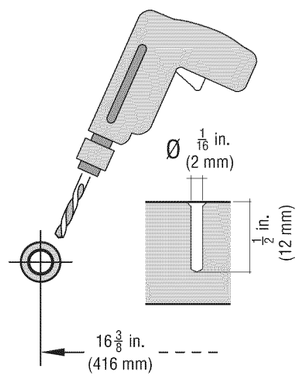

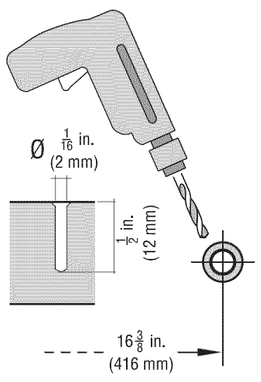

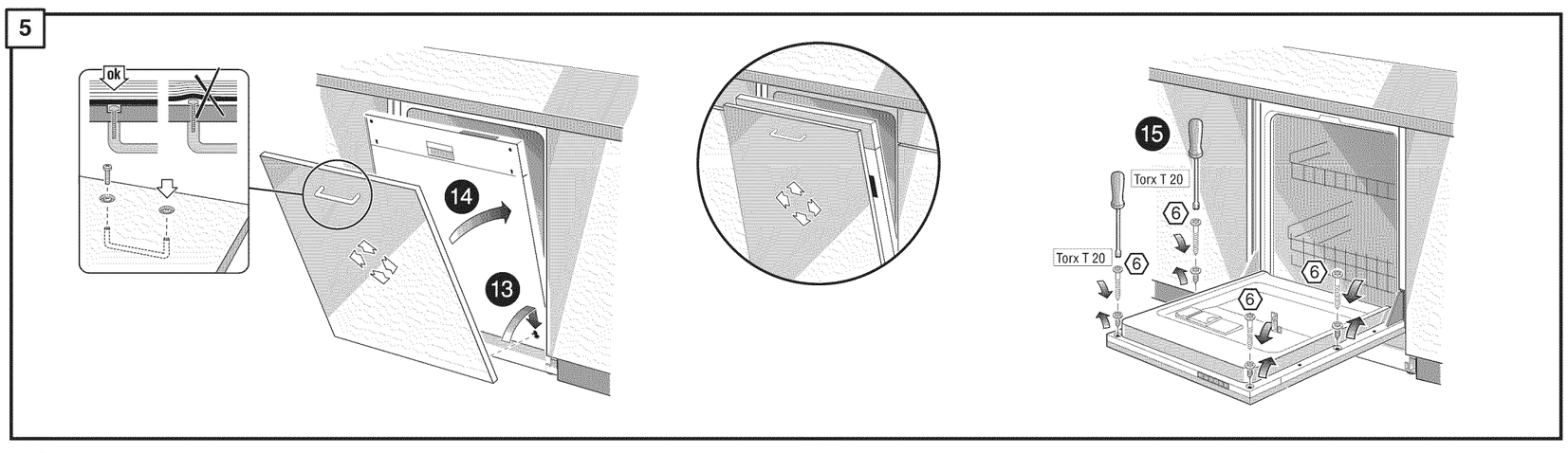

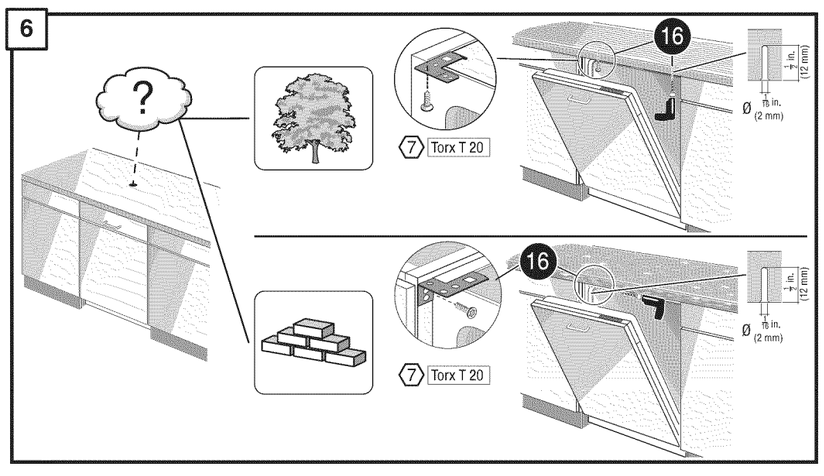

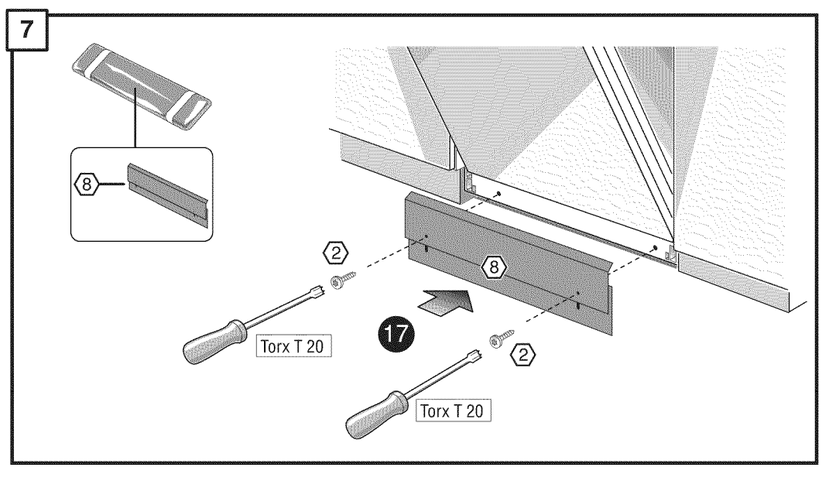

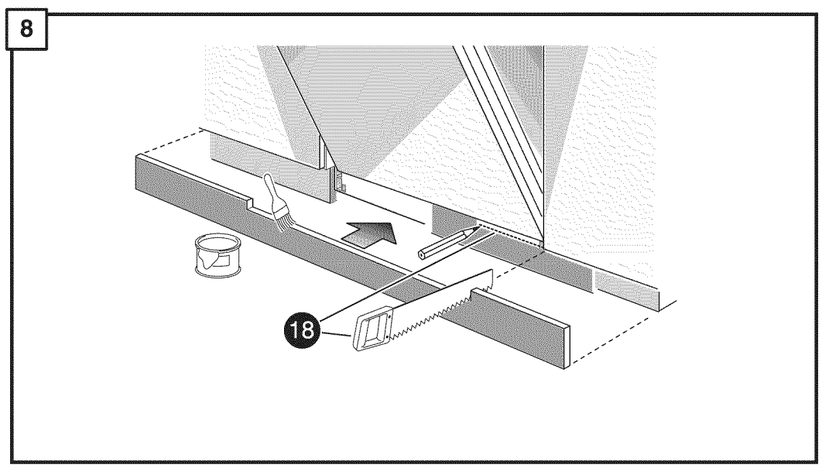

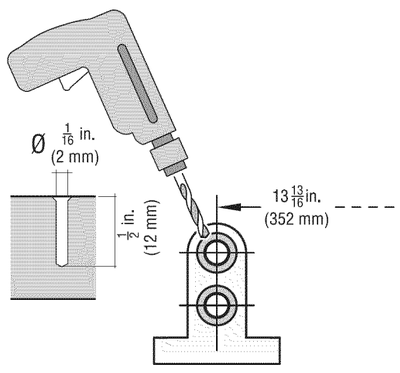

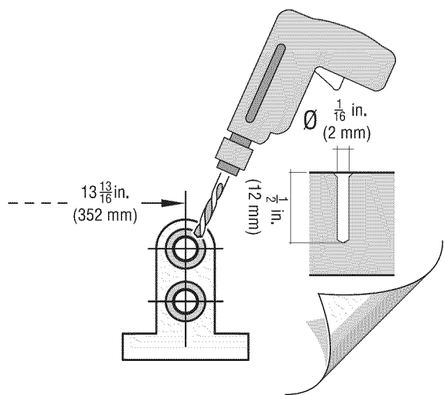

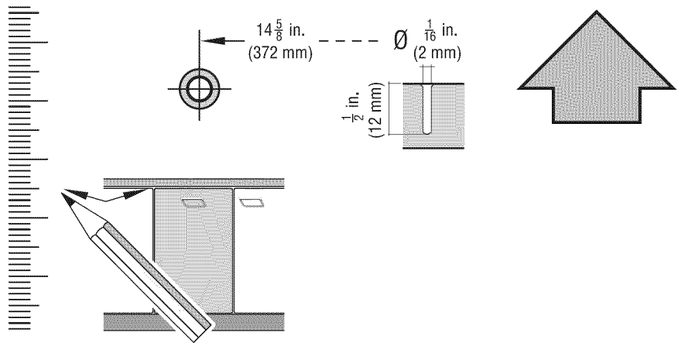
14 5/8 in. (372 mm)
Ø 1/16 in. (2 mm)
1/2 in. (12 mm)

Ø 1/16 in. (2 mm)
14 5/8 in. (372 mm)
1/2 in. (12 mm)

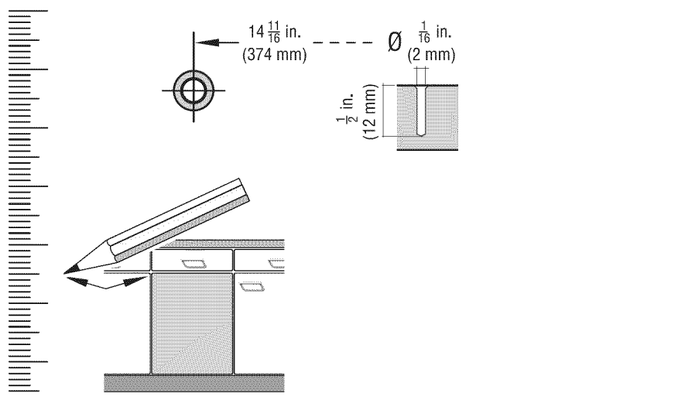
14 11/16 in. (374 mm)
Ø 1/16 in. (2 mm)
1/2 in. (12 mm)

Ø 1/16 in. (2 mm)
14 11/16 in. (374 mm)
1/2 in. (12 mm)

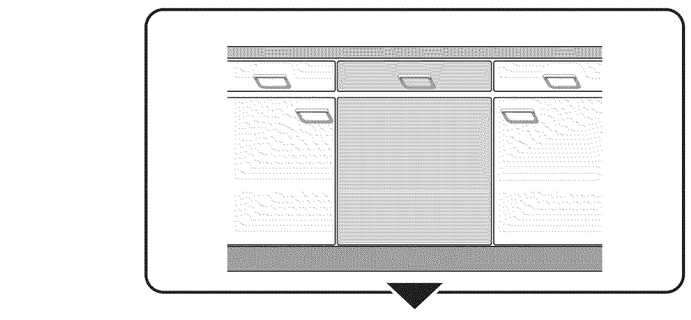

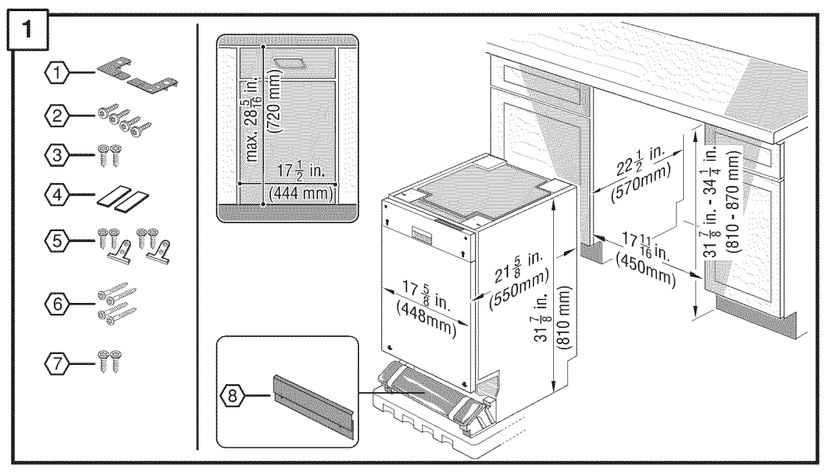
1
max. 28 5/16 in. (720 mm)
17 1/2 in. (444 mm)
22 1/2 in. (570mm)
17 11/16 in. (450mm)
31 7/8 in. - 34 1/4 in. (810 - 870 mm)
17 5/8 in. (448mm)
21 5/8 in. (550mm)
31 7/8 in. (810 mm)

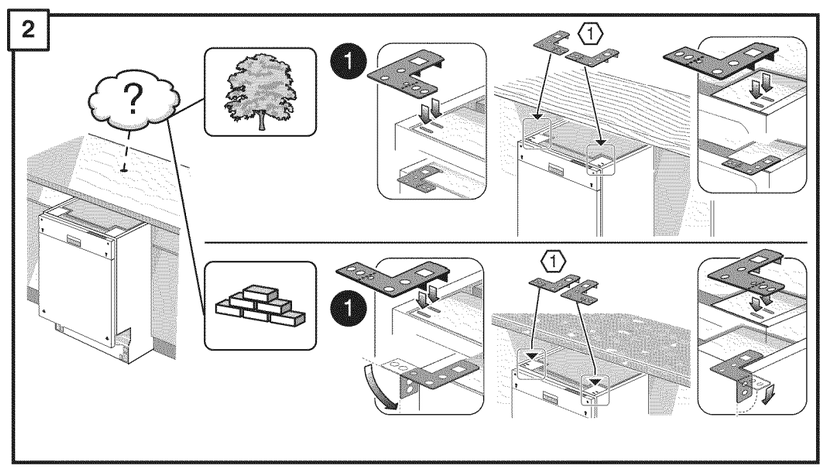

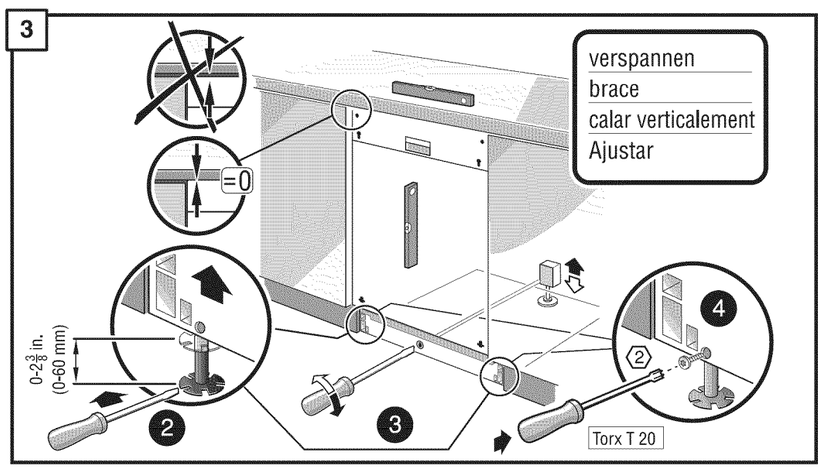
verspannen
brace
calar verticalement
Ajustar
=0
0-2 3/8 in. (0-60 mm)
Torx T 20

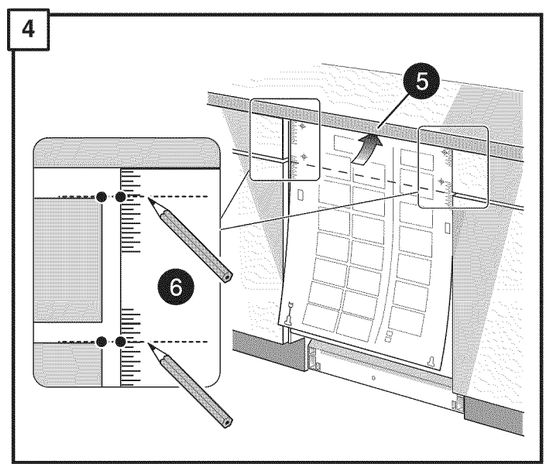

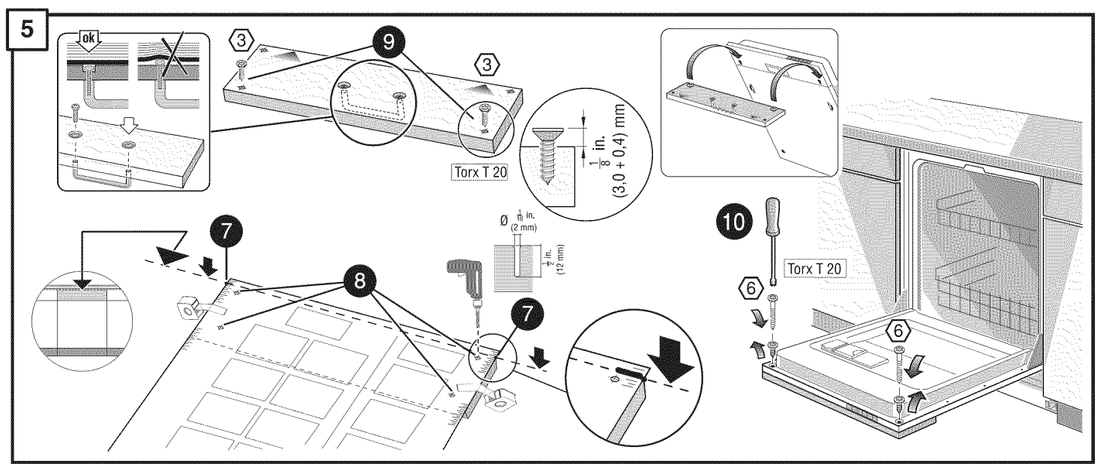
Torx T 20
1/8 in. (3,0 + 0,4) mm
Torx T 20

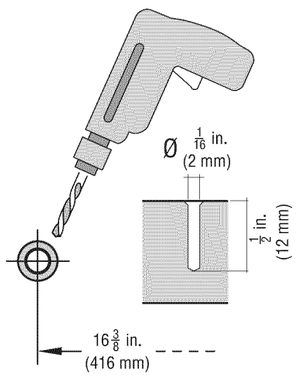
Ø 1/16 in. (2 mm)
1/2 in. (12 mm)
16 3/8 in. (416 mm)

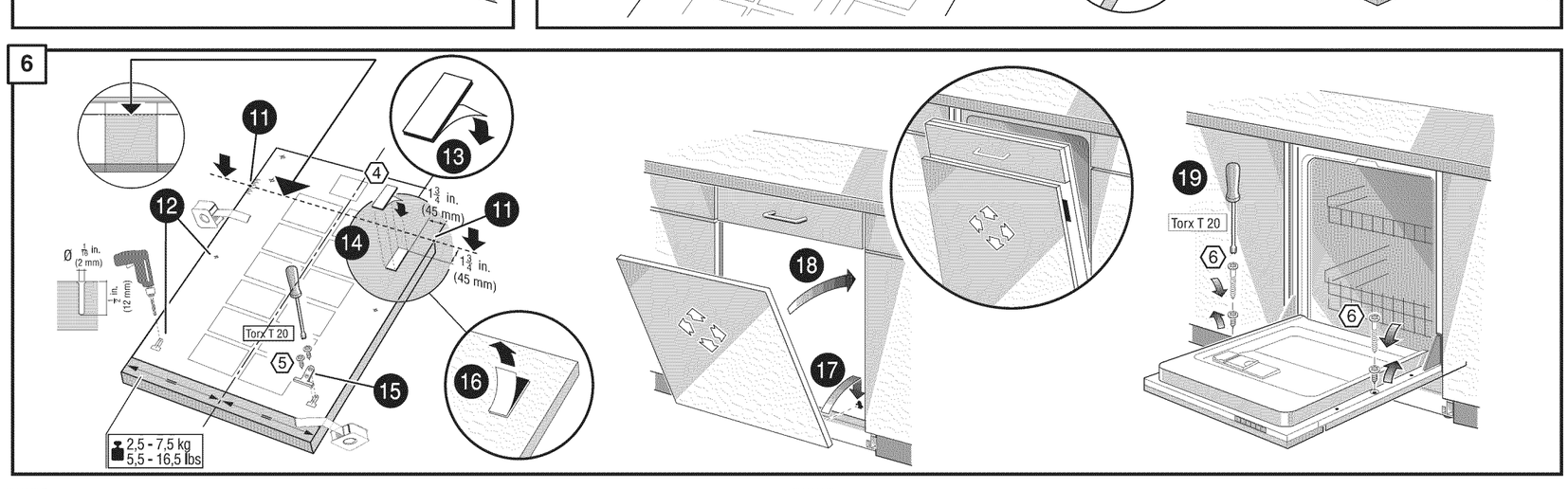
1 3/4 in. (45 mm)
1 3/4 in. (45 mm)
Torx T 20
2,5 - 7,5 kg
5,5 - 16,5 lbs
Torx T 20

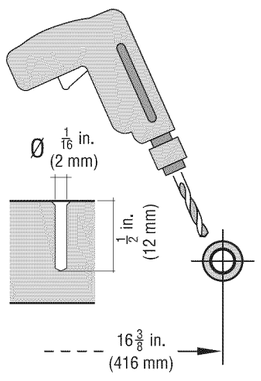
Ø 1/16 in. (2 mm)
1/2 in. (12 mm)
16 3/8 in. (416 mm)

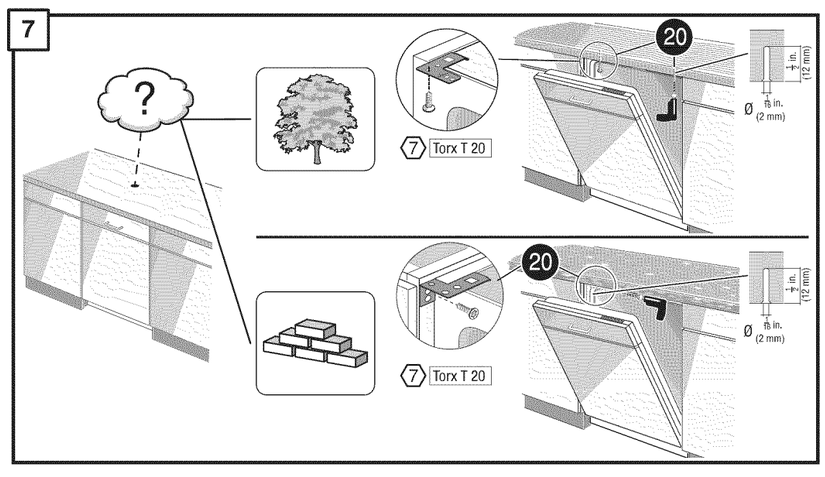
Torx T 20
Torx T 20

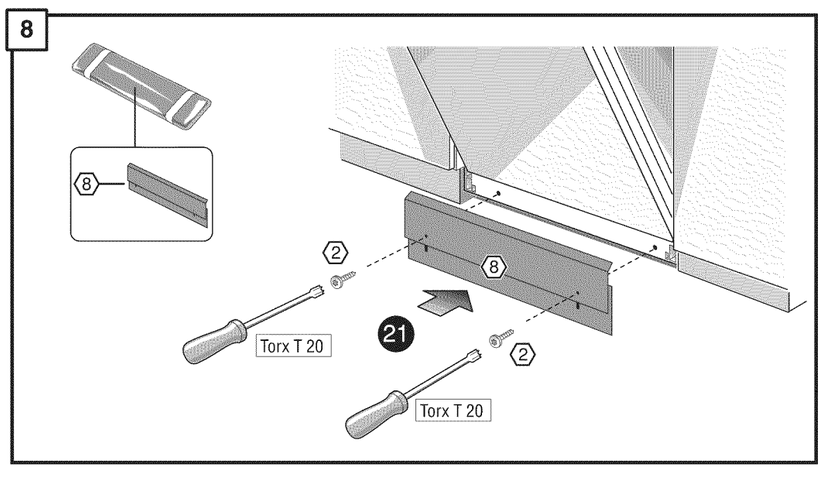
Torx T 20
Torx T 20

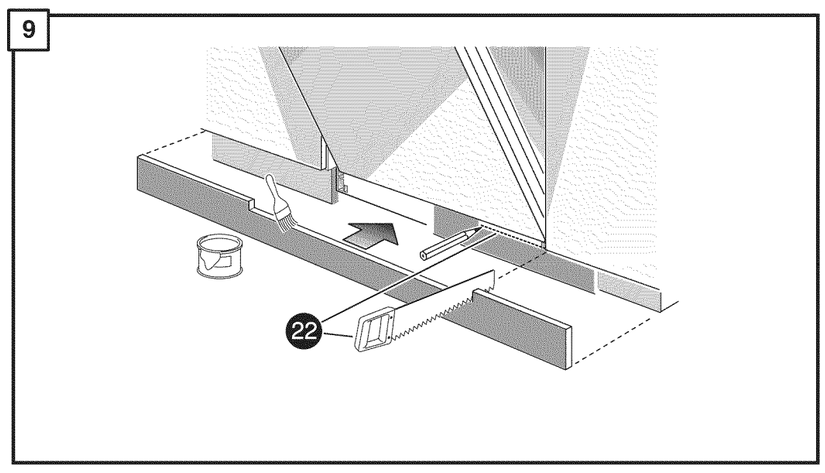

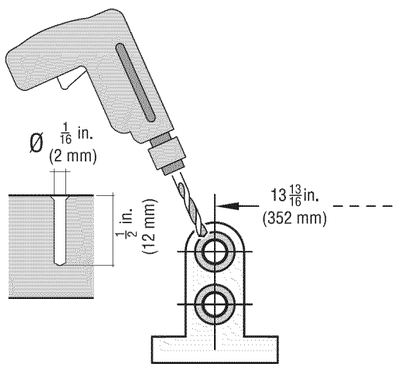
Ø 1/16 in. (2 mm)
1/2 in. (12 mm)
13 13/16 in. (352 mm)

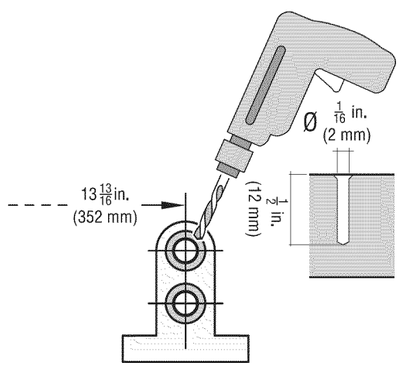
Ø 1/16 in. (2 mm)
1/2 in. (12 mm)
13 13/16 in. (352 mm)