SEARS

OWNER'S MANUAL

MODEL NO. 917.298353

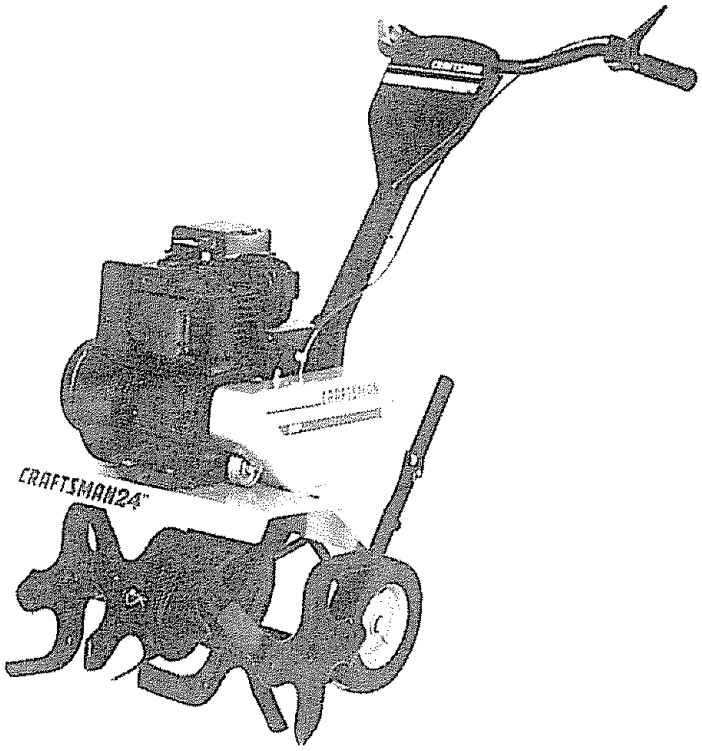

CRAFTSMAN®

5.0 HP
24 INCH TINE WIDTH
FRONT TINE TILLER

Caution:
Read and follow all Safety Rules and Instructions Before Operating This Equipment

- Assembly
- Operation
- Customer Responsibilities
- Service and Adjustments
- Repair Parts

Sears, Roebuck and Co., Hoffman Estates, IL 60179 U.S.A.

SAFETY RULES

Safe Operation Practices for Walk-Behind Powered Rotary Tillers

TRAINING

- Read the Owner's Manual carefully. Be thoroughly familiar with the controls and the proper use of the equipment. Know how to stop the unit and disengage the controls quickly.
- Never allow children to operate the equipment. Never allow adults to operate the equipment without proper instruction.
- Keep the area of operation clear of all persons, particularly small children, and pets.

PREPARATION

- Thoroughly inspect the area where the equipment is to be used and remove all foreign objects.
- Disengage all clutches and shift into neutral before starting the engine (motor).
- Do not operate the equipment without wearing adequate outer garments. Wear footwear that will improve footing on slippery surfaces.
- Handle fuel with care; it is highly flammable.
  - Use an approved fuel container.
  - Never add fuel to a running engine or hot engine.
  - Fill fuel tank outdoors with extreme care. Never fill fuel tank indoors.
  - Replace gasoline cap securely and clean up spilled fuel before restarting.
- Use extension cords and receptacles as specified by the manufacturer for all units with electric drive motors or electric starting motors.
- Never attempt to make any adjustments while the engine (motor) is running (except where specifically recommended by manufacturer).

OPERATION

- Do not put hands or feet near or under rotating parts.
- Exercise extreme caution when operating on or crossing gravel drives, walks, or roads. Stay alert for hidden hazards or traffic. Do not carry passengers.
- After striking a foreign object, stop the engine (motor), remove the wire from the spark plug, thoroughly inspect the tiller for any damage, and repair the damage before restarting and operating the tiller.
- Exercise caution to avoid slipping or falling.
- If the unit should start to vibrate abnormally, stop the engine (motor) and check immediately for the cause. Vibration is generally a warning of trouble.
- Stop the engine (motor) when leaving the operating position.
- Take all possible precautions when leaving the machine unattended. Disengage the tines, shift into neutral, and stop the engine.
- Before cleaning, repairing, or inspecting, shut off the engine and make certain all moving parts have stopped. Disconnect the spark plug wire, and keep the wire away from the plug to prevent accidental starting. Disconnect the cord on electric motors.
- Do not run the engine indoors; exhaust fumes are dangerous.
- Never operate the tiller without proper guards, plates, or other safety protective devices in place.
- Keep children and pets away.
- Do not overload the machine capacity by attempting to till too deep at too fast a rate.
- Never operate the machine at high speeds on slippery surfaces. Look behind and use care when backing.
- Never allow bystanders near the unit.
- Use only attachments and accessories approved by the manufacturer of the tiller (such as wheel weights, counterweights, cabs, and the like).
- Never operate the tiller without good visibility or light.
- Be careful when tilling in hard ground. The tines may catch in the ground and propel the tiller forward. If this occurs, let go of the handlebars and do not restrain the machine.

MAINTENANCE AND STORAGE

- Keep machine, attachments, and accessories in safe working condition.
- Check shear pins, engine mounting bolts, and other bolts at frequent intervals for proper tightness to be sure the equipment is in safe working condition.
- Never store the machine with fuel in the fuel tank inside a building where ignition sources are present, such as hot water and space heaters, clothes dryers, and the like. Allow the engine to cool before storing in any enclosure.
- Always refer to the operator's guide instructions for important details if the tiller is to be stored for an extended period.

- IMPORTANT -

CAUTIONS, IMPORTANTS, AND NOTES ARE A MEANS OF ATTRACTING ATTENTION TO IMPORTANT OR CRITICAL INFORMATION IN THIS MANUAL.

CAUTION: Look for this symbol to point out important safety precautions. It means —Attention! Become Alert! Your safety is involved.

IMPORTANT: USED TO ALERT YOU THAT THERE IS A POSSIBILITY OF DAMAGING THIS EQUIPMENT

NOTE: Gives essential information that will aid you to better understand, incorporate, or execute a particular set of instructions.

CONGRATULATIONS on your purchase of a Sears Tiller. It has been designed, engineered and manufactured to give you the best possible dependability and performance.

Should you experience any problems you cannot easily remedy, please contact your nearest authorized Sears Service Center/Department. They have competent, well-trained technicians and the proper tools to service or repair this unit.

Please read and retain this manual. The instructions will enable you to assemble and maintain your tiller properly. Always observe the "SAFETY RULES".

MODEL NUMBER **917.298353**

SERIAL NUMBER _____

DATE OF PURCHASE _____

THE MODEL AND SERIAL NUMBERS WILL BE FOUND ON THE MODEL PLATE ATTACHED TO THE RIGHT HAND ENGINE BRACKET.

YOU SHOULD RECORD BOTH SERIAL NUMBER AND DATE OF PURCHASE AND KEEP IN A SAFE PLACE FOR FUTURE REFERENCE.

PRODUCT SPECIFICATIONS

HORSEPOWER:	5.0 HP
DISPLACEMENT:	12.57 cu. in.
GASOLINE CAPACITY:	3 Quarts Unleaded Regular
OIL (API-SG): (CAPACITY: 20 oz.)	SAE 30 (Above 32°F) SAE 5W-30 (Below 32°F)
SPARK PLUG : (GAP: .030")	Champion RJ19LM (STD361458)

MAINTENANCE AGREEMENT

A Sears Maintenance Agreement is available on this product. Contact your nearest Sears store for details.

CUSTOMER RESPONSIBILITIES

- Read and observe the safety rules.
- Follow a regular schedule in maintaining, caring for and using your tiller.
- Follow the instructions under "Customer Responsibilities" and "Storage" sections of this Owner's Manual.

IMPORTANT: THIS UNIT IS EQUIPPED WITH AN INTERNAL COMBUSTION ENGINE AND SHOULD NOT BE USED ON OR NEAR ANY UNIMPROVED FOREST-COVERED, BRUSH-COVERED OR GRASS COVERED LAND UNLESS THE ENGINE'S EXHAUST SYSTEM IS EQUIPPED WITH A SPARK ARRESTER MEETING APPLICABLE LOCAL OR STATE LAWS (IF ANY). IF A SPARK ARRESTER IS USED, IT SHOULD BE MAINTAINED IN EFFECTIVE WORKING ORDER BY THE OPERATOR.

IN THE STATE OF CALIFORNIA THE ABOVE IS REQUIRED BY LAW (SECTION 4442 OF THE CALIFORNIA PUBLIC RESOURCES CODE). OTHER STATES MAY HAVE SIMILAR LAWS. FEDERAL LAWS APPLY ON FEDERAL LANDS. SEE YOUR SEARS AUTHORIZED SERVICE CENTER/DEPARTMENT FOR SPARK ARRESTER. REFER TO THE REPAIR PARTS SECTION OF THIS MANUAL FOR PART NUMBER.

LIMITED ONE YEAR WARRANTY ON CRAFTSMAN TILLER

For one (1) year from date of purchase, when this Craftsman Tiller is maintained, lubricated, and tuned up according to the operating and maintenance instructions in the owner's manual, Sears will repair free of charge any defect in material or workmanship.

This Warranty does not cover:

- Expendable items which become worn during normal use, such as tines, spark plugs, air cleaners and belts.
- Repairs necessary because of operator abuse or negligence, including bent crankshafts and the failure to maintain the equipment according to the instructions contained in the owner's manual.
- If this Craftsman Tiller is used for commercial or rental purposes, this Warranty applies for only thirty (30) days from the date of purchase.

WARRANTY SERVICE IS AVAILABLE BY RETURNING THE CRAFTSMAN TILLER TO THE NEAREST SEARS SERVICE CENTER/DEPARTMENT IN THE UNITED STATES. THIS WARRANTY APPLIES ONLY WHILE THIS PRODUCT IS IN USE IN THE UNITED STATES.

This Warranty gives you specific legal rights, and you may also have other rights which vary from state to state.

SEARS, ROEBUCK AND CO., D/817 WA, HOFFMAN ESTATES, IL 60179

TABLE OF CONTENTS

INDEX

ACCESSORIES

These accessories were available when the tiller was purchased. They are also available at most Sears Retail outlets and Service Centers. Most Sears Stores can order repair parts for you when you provide the model number of your tiller.

ENGINE

SPARK PLUG	MUFFLER	AIR FILTER	GAS CAN	ENGINE OIL	STABILIZER
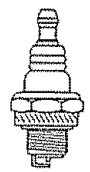	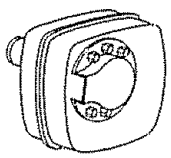		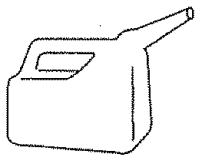	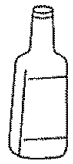	

TILLER MAINTENANCE

BELT	TINES	CLEVIS PIN	HAIRPIN CLIP
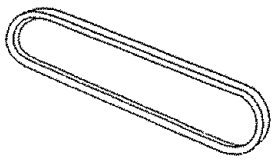			

ASSEMBLY

Your new tiller has been assembled at the factory with exception of those parts left unassembled for shipping purposes. To ensure safe and proper operation of your tiller all parts and hardware you assemble must be tightened securely. Use the correct tools as necessary to insure proper tightness.

TOOLS REQUIRED FOR ASSEMBLY

A socket wrench set will make assembly easier. Standard wrench sizes are listed.

(1) Utility knife

(1) Screwdriver

(1) Pair of pliers

(2) 1/2" wrenches

OPERATOR'S POSITION (See Fig. 1)

When right or left hand is mentioned in this manual, it means when you are in the operating position (standing behind tiller handles).

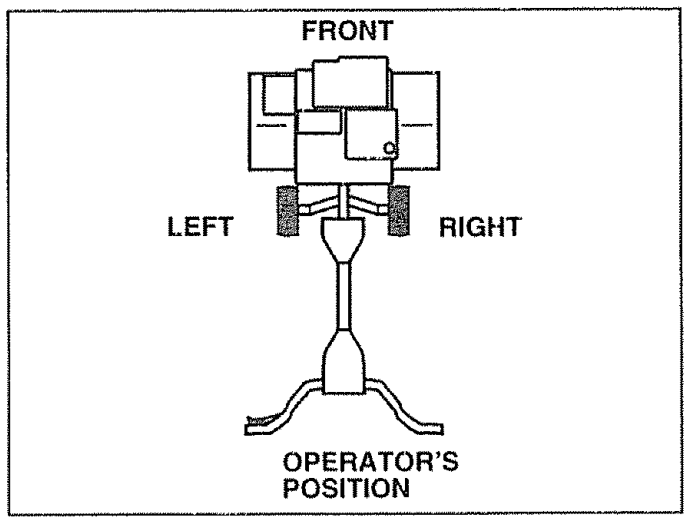

FIG. 1

CONTENTS OF HARDWARE PACK

(1) Owner's Manual

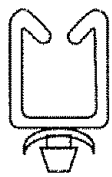

(1) Plastic Cable Clip

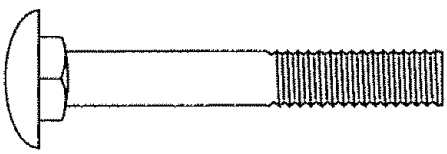

(2) Carriage Bolts 5/16-18 UNC x 2-3/8 Gr. 5

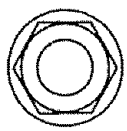

(2) Flange Locknuts 5/16-18 UNC

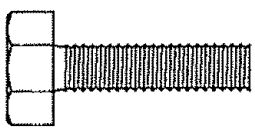

(2) Hex Bolts 5/16-18 x 1-1/4

(2) Hex Nuts 5/16-18

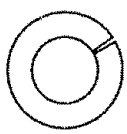

(2) Lock Washers 5/16

ASSEMBLY

UNPACK CARTON & INSTALL HANDLE (See Fig. 2)

CAUTION: Be careful of exposed staples when handling or disposing of cartoning material.

IMPORTANT: WHEN UNPACKING AND ASSEMBLING TILLER, BE CAREFUL NOT TO STRETCH OR KINK CABLE(S).

- Cut cable ties securing handle column.
- Slowly lift handle column up and slip over handle mount.
- Remove packing from carton.
- Secure handle column to handle mount using two (2) carriage bolts and two (2) flange locknuts. Tighten both flange locknuts securely.
- Insert plastic cable clip into hole in handle column.
- Route tine control cable through plastic cable clip on handle column.
- Remove packing material from handle assembly.
- Cut cable ties securing tiller to skid.
- Cut away carton and remove tiller from skid by pulling backwards.

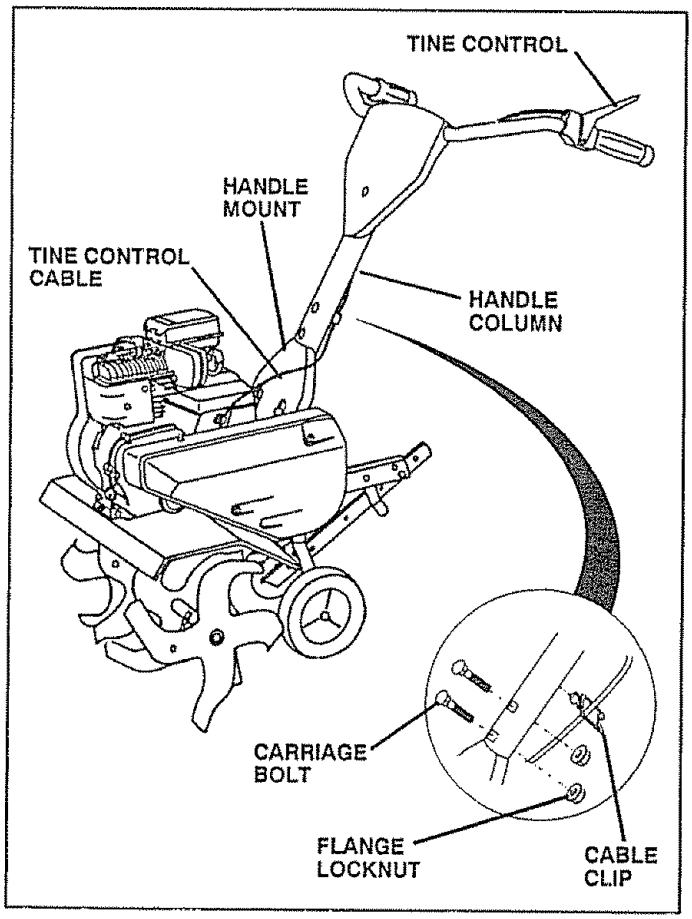

FIG. 2

INSTALL DEPTH STAKE ASSEMBLY (See Fig. 3)

- Insert stake support between engine bracket halves with stake spring down.

NOTE: It may be necessary to loosen nut "A".

- Bolt stake support to engine brackets with bolts, lock washers and nuts. Tighten securely. Also tighten nut "A" if it was necessary to loosen.
- Depth stake must move freely. If it does not, loosen support bolt.

HANDLE HEIGHT

- Handle height may be adjusted to better suit operator. (See "HANDLE HEIGHT" in the Service and Adjustments section of this manual).

TILLING WIDTH

- Tilling width may be adjusted to better handle your tilling conditions (See "TINE ARRANGEMENT" in the Service and Adjustments section of this manual).

TINE OPERATION

- Check tine operation before first use. (See "TINE OPERATION CHECK" in the Service and Adjustments section of this manual).

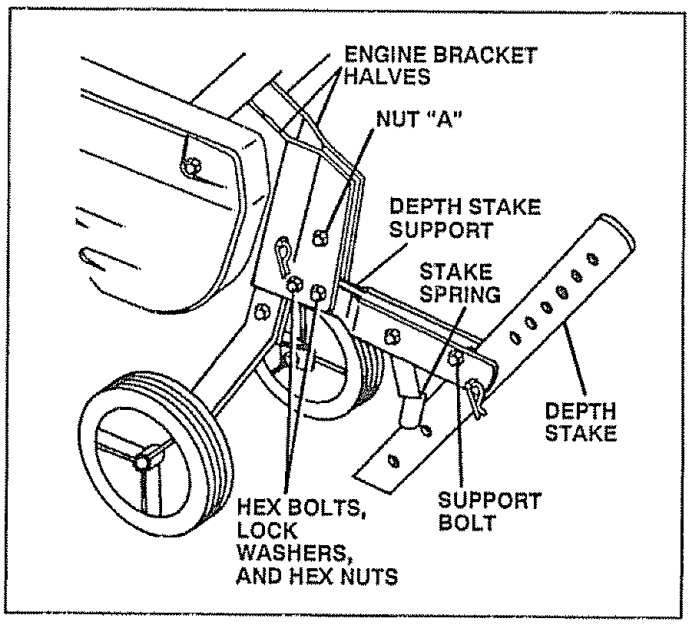

FIG. 3

OPERATION

KNOW YOUR TILLER

READ THIS OWNER'S MANUAL AND SAFETY RULES BEFORE OPERATING YOUR TILLER.

Compare the illustrations with your tiller to familiarize yourself with the location of various controls and adjustments. Save this manual for future reference.

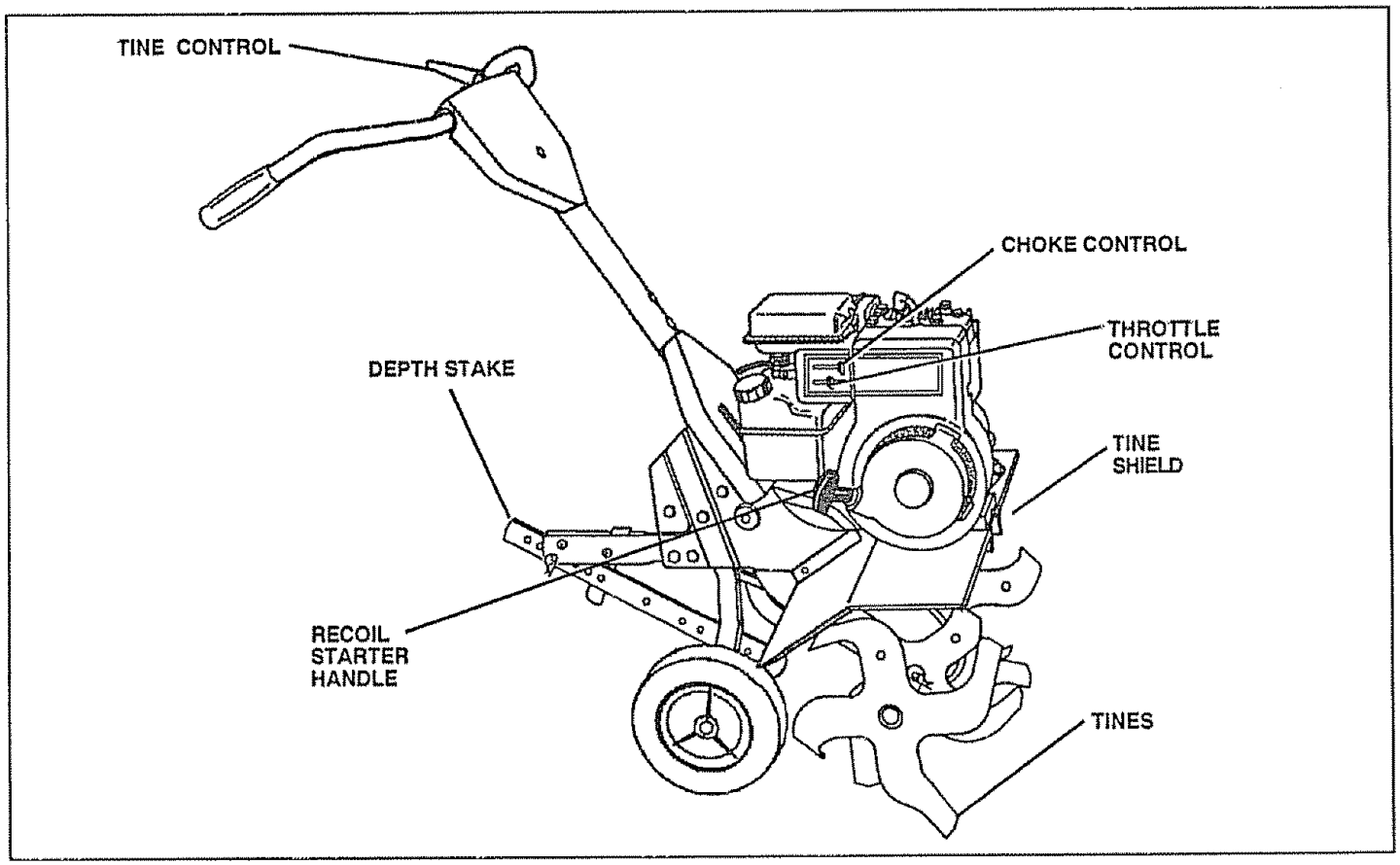

FIG. 4

MEETS ANSI SAFETY REQUIREMENTS

Our tillers conform to the safety standards of the American National Standards Institute.

TINE CONTROL - Engages tines.
CHOKE CONTROL - Used when starting a cold engine.
THROTTLE CONTROL - Controls engine speed.
DEPTH STAKE - Controls forward speed and the depth at which the tiller will dig.
RECOIL STARTER HANDLE - Used to start the engine.

OPERATION

The operation of any tiller can result in foreign objects thrown into the eyes, which can result in severe eye damage. Always wear safety glasses or eye shields before starting your tiller and while tilling. We recommend a wide vision safety mask for over the spectacles or standard safety glasses.

HOW TO USE YOUR TILLER

STOPPING (See Fig. 5)

TINES

- Release tine control to stop movement.

ENGINE

- Move throttle control to "STOP" position.
- Never use choke to stop engine.

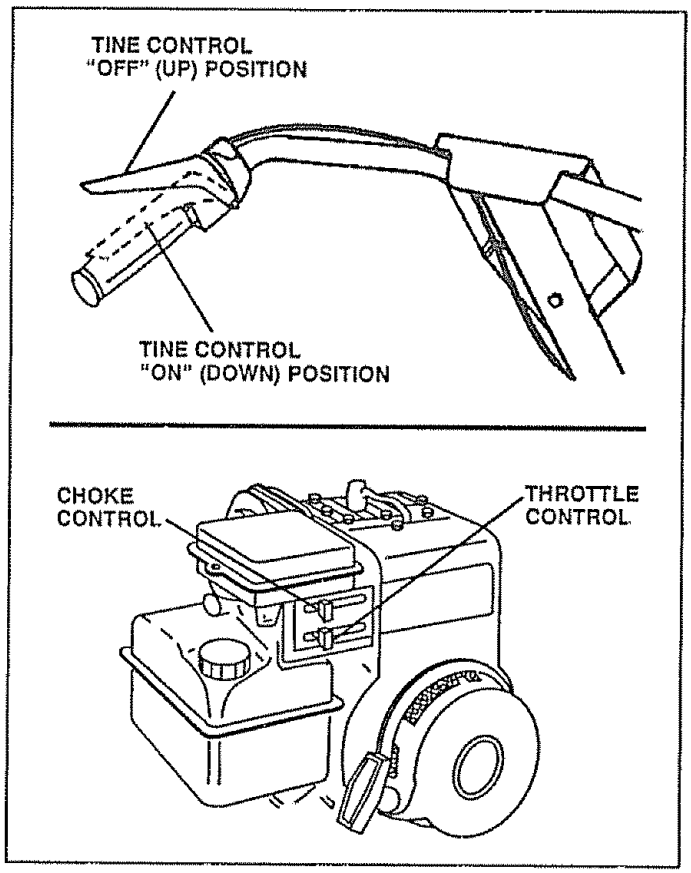

FIG. 5

TINE OPERATION (See Fig. 5)

Start engine and move throttle control to desired speed.

- Squeeze tine control to handle.

TILLING

The speed and depth of tilling is regulated by the position of the depth stake and wheel height.

The depth stake should always be below the wheels for digging. It serves as a brake to slow the tiller's forward motion to enable the tines to penetrate the ground. Also, the more the depth stake is lowered into the ground the deeper the tines will dig.

DEPTH STAKE (See Fig. 6)

Adjust depth stake by removing the hairpin clip and clevis pin. Change depth stake to desired position. Replace the clevis pin and hairpin clip.

- For normal tilling, set depth stake at the second or third hole from the top.

WHEELS (See Fig. 6)

Adjust wheels by removing the hairpin clip and clevis pin. Change wheel position. Replace the hairpin clip and clevis pin.

- For normal tilling, set wheels at the second or third hole from the top.

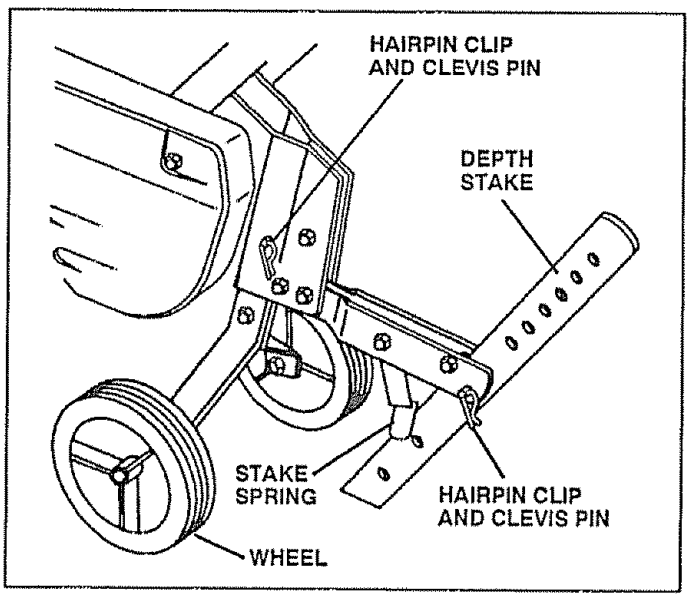

FIG. 6

OPERATION

TRANSPORTING YOUR TILLER

CAUTION: Before lifting or transporting, allow tiller engine and muffler to cool. Disconnect spark plug wire. Drain gasoline from fuel tank.

AROUND THE YARD

- Tip depth stake forward until it is held by the stake spring.
- Push tiller handles down, raising tines off the ground.
- Push or pull tiller to desired location.

AROUND TOWN

- Disconnect spark plug wire.
- Drain fuel tank.
- Transport in upright position to prevent oil leakage.

BEFORE STARTING ENGINE

IMPORTANT: BE VERY CAREFUL NOT TO ALLOW DIRT TO ENTER THE ENGINE WHEN CHECKING OR ADDING OIL OR FUEL. USE CLEAN OIL AND FUEL AND STORE IN APPROVED, CLEAN, COVERED CONTAINERS. USE CLEAN FILL FUNNELS.

FILL ENGINE WITH OIL (See Fig. 7)

- With engine level, remove engine oil filler plug.
- Fill engine with oil to point of overflowing. For approximate capacity see "PRODUCT SPECIFICATIONS" on page 3 of this manual.
- Tilt tiller back on its wheels and then re-level.
- Check oil level. Refill to point of overflowing if necessary. Replace oil filler plug.
- For cold weather operation you should change oil for easier starting (See "OIL VISCOSITY CHART" in the Customer Responsibilities section of this manual).
- To change engine oil, see the Customer Responsibilities section of this manual.

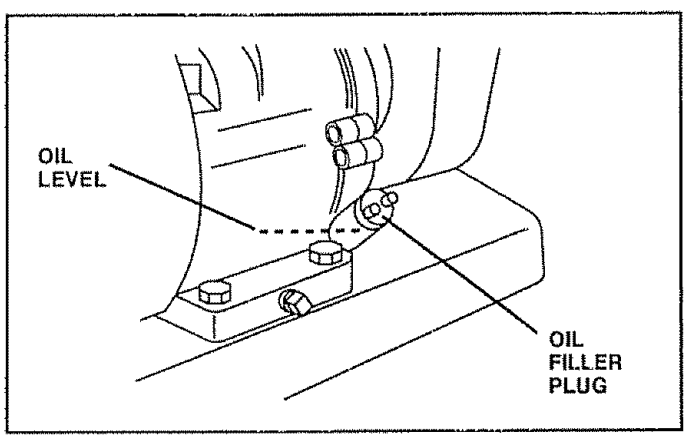

FIG. 7

ADD GASOLINE

- Fill fuel tank. Use fresh, clean, regular unleaded gasoline. (Use of leaded gasoline will increase carbon and lead oxide deposits and reduce valve life.

IMPORTANT: WHEN OPERATING IN TEMPERATURES BELOW 32°F, USE FRESH, CLEAN, WINTER GRADE GASOLINE TO HELP INSURE GOOD COLD WEATHER STARTING.

WARNING: Experience indicates that alcohol blended fuels (called gasohol or using ethanol or methanol) can attract moisture which leads to separation and formation of acids during storage. Acidic gas can damage the fuel system of an engine while in storage. To avoid engine problems, the fuel system should be emptied before storage of 30 days or longer. Drain the gas tank, start the engine and let it run until the fuel lines and carburetor are empty. Use fresh fuel next season. See the Storage section of this manual for additional information. Never use engine or carburetor cleaner products in the fuel tank or permanent damage may occur.

CAUTION: Fill to within 1/2 inch of top of fuel tank to prevent spills and to allow for fuel expansion. If gasoline is accidentally spilled, move machine away from area of spill. Avoid creating any source of ignition until gasoline vapors have disappeared.

Do not overfill. Wipe off any spilled oil or fuel. Do not store, spill or use gasoline near an open flame.

TO START ENGINE (See Fig. 8)

CAUTION: Keep the tine control in "OFF" position when starting engine.

- Make sure spark plug wire is properly connected.
- Place throttle control in "FAST" position.
- To start a cold engine, place choke control in "CHOKE" position. A warm engine requires less choking to start.
- Grasp starter handle with one hand and grasp the tiller with other hand. Pull rope out slowly until engine reaches start of compression cycle (rope will pull slightly harder at this point).
- Pull starter handle quickly. Do not let starter handle snap back against starter.
- When engine starts, slowly move choke control to "RUN" position as engine warms up.
- Move throttle control to desired running position.
- Allow engine to warm up for a few minutes before engaging tines

NOTE: If at a high altitude (3000 feet) or in cold temperatures (below 32°F), the carburetor fuel mixture may need to be adjusted for best engine performance. See "TO ADJUST CARBURETOR" in the Service and Adjustments section of this manual.

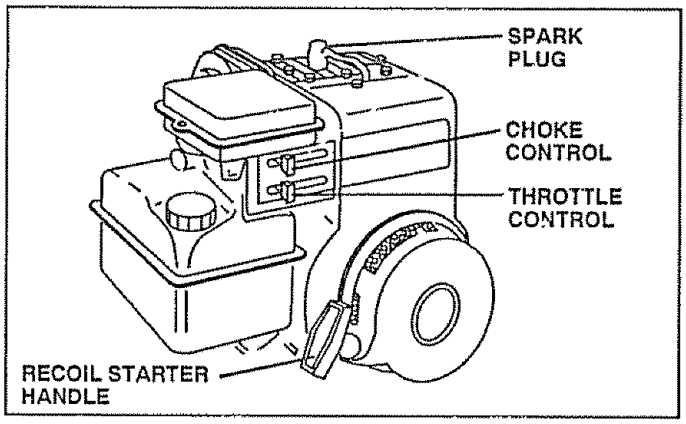

FIG. 8

BREAKING IN YOUR TILLER

Break-in your belt(s), pulleys and tine control before you actually begin tilling.

- Start engine, tip tines off ground by pressing handles down and engage tine control to start tine rotation. Allow tines to rotate for five minutes.
- Check tine operation and adjust if necessary. See "TINE OPERATION CHECK" in the Service and Adjustments section of this manual.

TILLING HINTS

CAUTION: Until you are accustomed to handling your tiller, start actual field use with throttle in "SLOW" position.

To help tiller move forward, lift up the handles slightly (thus lifting depth stake out of ground). To slow down the tiller, press down on handles.

If you are straining or tiller is shaking, the wheels and depth stake are not set properly in the soil being tilled. The proper setting of the wheels and depth stake is through trial and error and depends upon the soil condition. (The harder or wetter the ground, the slower the engine and tine speed needed. Under these poor conditions, at fast speed the tiller will run and jump over the ground).

A properly adjusted tiller will dig with little effort from the operator.

- Tilling is digging into, turning over, and breaking up packed soil before planting. Loose, unpacked soil helps root growth. Best tilling depth is 4" to 6". A tiller will also clear the soil of unwanted vegetation. The decomposition of this vegetable matter enriches the soil. Depending on the climate (rainfall and wind), it may be advisable to till the soil at the end of the growing season to further condition the soil.
- Soil conditions are important for proper tilling. Tines will not readily penetrate dry, hard soil which may contribute to excessive bounce and difficult handling of your tiller. Hard soil should be moistened before tilling; however, extremely wet soil will "ball-up" or clump during tilling. Wait until the soil is less wet in order to achieve the best results. When tilling in the fall, remove vines and long grass to prevent them from wrapping around the tine shaft and slowing your tilling operation.
- You will find tilling much easier if you leave a row untilled between passes. Then go back over the entire area at right angles (See Fig. 9). There are two reasons for doing this. First, wide turns are much easier to negotiate than about-faces. Second, the tiller won't be pulling itself, and you, toward the row next to it.
- Set depth stake and wheel height for shallow tilling when working extremely hard soil or sod. Then work across the first cuts at normal depth.

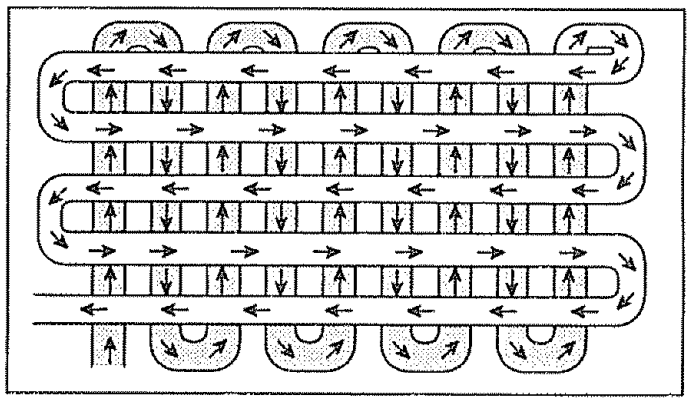

FIG. 9

CULTIVATING

Cultivating is destroying the weeds between rows to prevent them from robbing nourishment and moisture from the plants. At the same time, breaking up the upper layer of soil crust will help retain moisture in the soil. Best digging depth is 1" to 3".

- You will probably not need to use the depth stake. Begin by tipping the depth stake forward until it is held by the stake spring.
- Cultivate up and down the rows at a speed which will allow tines to uproot weeds and leave the ground in rough condition, promoting no further growth of weeds and grass (See Fig. 10).

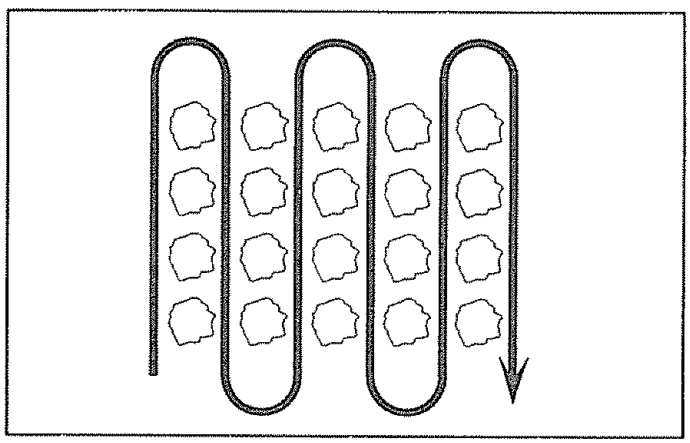

FIG. 10

CUSTOMER RESPONSIBILITIES

MAINTENANCE SCHEDULE FILL IN DATES AS YOU COMPLETE REGULAR SERVICE	BEFORE EACH USE	FIRST 2 HOURS	EVERY 5 HOURS	EVERY 25 HOURS	EVERY 50 HOURS	SERVICE DATES									
Check Engine Oil Level	✓		✓												
Change Engine Oil		✓		✓[1,2]											
Oil Pivot Points			✓												
Inspect Spark Arrester / Muffler					✓										
Inspect Air Screen	✓														
Clean or Replace Air Cleaner Cartridge				✓[2]											
Clean Engine Cylinder Fins				✓											
Replace Spark Plug					✓										

1 - Change more often when operating under a heavy load or in high ambient temperatures.
2 - Service more often when operating in dirty or dusty conditions.

GENERAL RECOMMENDATIONS

The warranty on this tiller does not cover items that have been subjected to operator abuse or negligence. To receive full value from the warranty, operator must maintain tiller as instructed in this manual.

Some adjustments will need to be made periodically to properly maintain your tiller.

All adjustments in the Service and Adjustments section of this manual should be checked at least once each season.

- Once a year you should replace the spark plug, clean or replace air filter, and check tines and belt for wear. A new spark plug and clean air filter assure proper air-fuel mixture and help your engine run better and last longer.

BEFORE EACH USE

- Check engine oil level.
- Check tine operation.
- Check for loose fasteners.

LUBRICATION

Keep unit well lubricated (See "LUBRICATION CHART").

LUBRICATION CHART

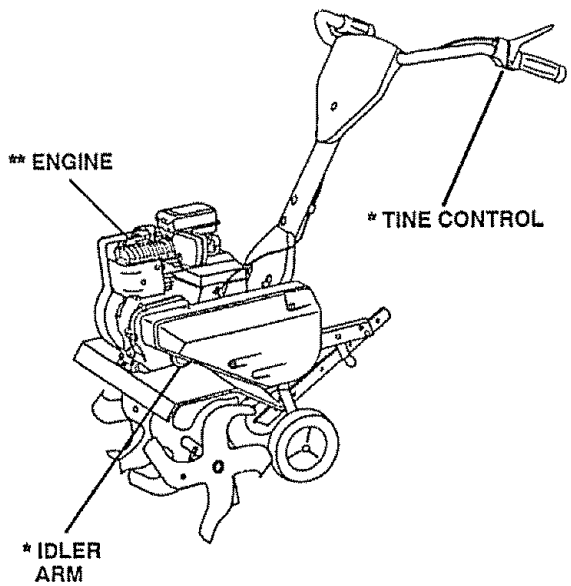

* SAE 30 OR 10W30 MOTOR OIL
** REFER TO CUSTOMER RESPONSIBILITIES "ENGINE" SECTION.

CUSTOMER RESPONSIBILITIES

Disconnect spark plug wire before performing any maintenance (except carburetor adjustment) to prevent accidental starting of engine.

Prevent fires! Keep the engine free of grass, leaves, spilled oil, or fuel. Remove fuel from tank before tipping unit for maintenance. Clean muffler area of all grass, dirt, and debris.

Do not touch hot muffler or cylinder fins as contact may cause burns.

ENGINE

LUBRICATION

Use only high quality detergent oil rated with API service classification SG. Select the oil's SAE viscosity grade according to your expected temperature.

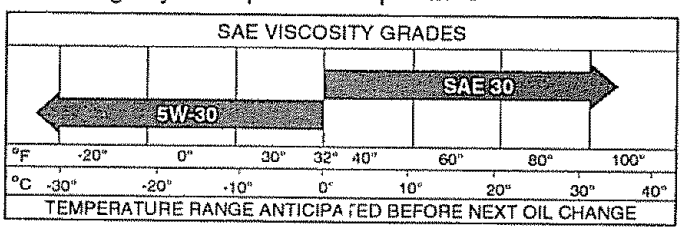

FIG. 11

NOTE: Although multi-viscosity oils (5W-30, 10W-30, etc.) improve starting in cold weather, these multi-viscosity oils will result in increased oil consumption when used above 32°F (0°C). Check your engine oil level more frequently to avoid possible engine damage from running low on oil.

Change the oil after the first two hours of operation and every 25 hours thereafter or at least once a year if the tiller is not used for 25 hours in one year.

Check the crankcase oil level before starting the engine and after each five (5) hours of continuous use. Add SAE 30 motor oil or equivalent. Tighten oil filler plug securely each time you check the oil level.

TO CHANGE ENGINE OIL (See Figs. 11 and 12)

Determine temperature range expected before oil change. All oil must meet API service classification SG.

- Be sure tiller is on level surface.
- Oil will drain more freely when warm.
- Catch oil in a suitable container.
- Remove drain plug.
- Tip tiller forward to drain oil.
- After oil has drained completely, replace oil drain plug and tighten securely.
- Remove oil filler plug. Be careful not to allow dirt to enter the engine.
- Refill engine with oil. See "CHECK ENGINE OIL LEVEL" in the Operation section of this manual.

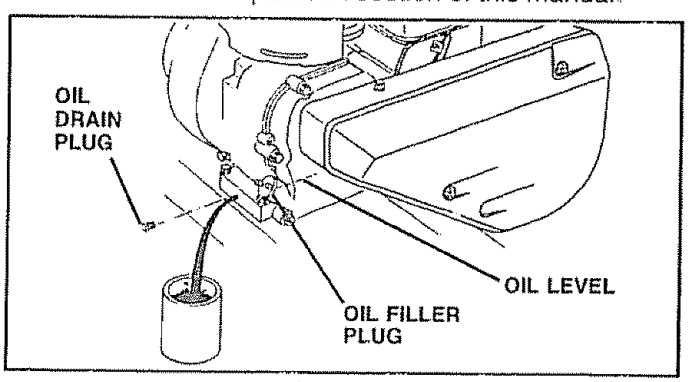

FIG. 12

AIR CLEANER (See Fig. 13)

Service air cleaner cartridge every twenty-five hours, more often if engine is used in very dusty conditions.

- Loosen air cleaner screws, one on each side of cover.
- Remove air cleaner cover.
- Carefully remove air cleaner cartridge. Be careful. Do not allow dirt or debris to fall into carburetor.
- Clean by tapping gently on a flat surface.
- If very dirty, replace or wash in a nonsudsing detergent and warm water solution. Rinse thoroughly with water flowing from mesh side until water is clear. Allow cartridge to stand and air dry thoroughly before using.
- Clean and replace cover. Tighten screws securely.

CAUTION: Petroleum solvents, such as kerosene, are not to be used to clean cartridge. They may cause deterioration of the cartridge. Do not oil cartridge. Do not use pressurized air to clean or dry cartridge.

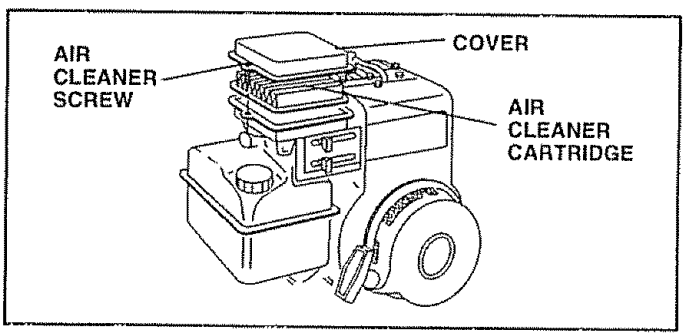

FIG. 13

COOLING SYSTEM (See Fig. 14)

Your engine is air cooled. For proper engine performance and long life keep your engine clean.

- Clean air screen frequently using a stiff-bristled brush.
- Remove blower housing and clean as necessary.
- Keep cylinder fins free of dirt and chaff.

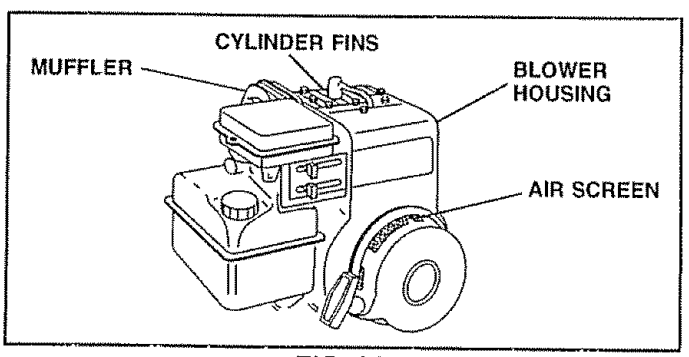

FIG. 14

CUSTOMER RESPONSIBILITIES

MUFFLER

Do not operate tiller without muffler. Do not tamper with exhaust system. Damaged mufflers or spark arresters could create a fire hazard. Inspect periodically and replace if necessary. If your engine is equipped with a spark arrester screen assembly, remove every 50 hours for cleaning and inspection. Replace if damaged.

SPARK PLUG

Replace spark plugs at the beginning of each tilling season or after every 50 hours of use, whichever comes first. Spark plug type and gap setting is shown in "PRODUCT SPECIFICATIONS" on page 3 of this manual.

TRANSMISSION

Your transmission is sealed and will only require lubrication if it is serviced.

CLEANING

- Clean engine, wheels, finish, etc. of all foreign matter.
- Keep finished surfaces and wheels free of all gasoline, oil, etc.
- Protect painted surfaces with automotive type wax.

We do not recommend using a garden hose to clean your unit unless the muffler, air filter and carburetor are covered to keep water out. Water in engine can result in a shortened engine life.

SERVICE AND ADJUSTMENTS

CAUTION: Disconnect spark plug wire from spark plug and place wire where it cannot come into contact with plug.

TILLER

TO ADJUST HANDLE HEIGHT (See Fig. 15)

Factory assembly has provided lowest handle height. Select handle height best suited for your tilling conditions. Handle height will be different when tiller digs into soil.

- If a higher handle height is desired, loosen the four nuts securing handle panel to engine brackets.
- Slide handle panel to desired location.
- Tighten the four nuts securely.

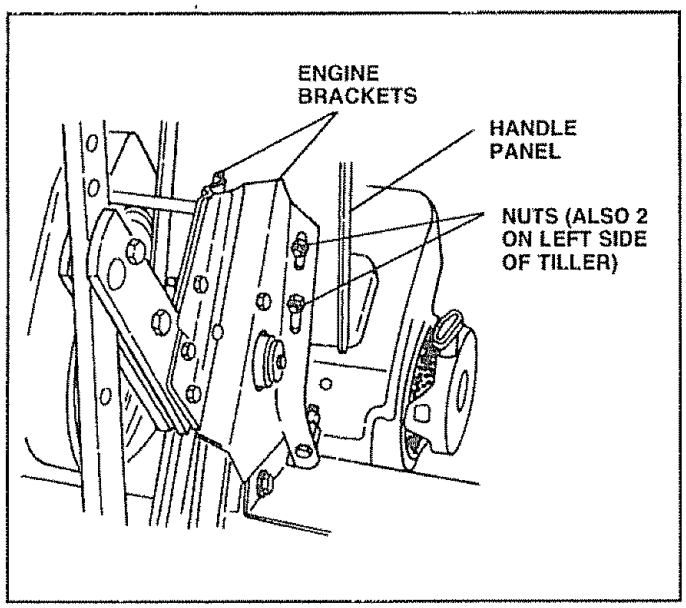

FIG. 15

TINE ARRANGEMENT

Your outer tines can be assembled in several different ways to suit your tilling or cultivating needs.

CAUTION: Tines are sharp. Wear gloves or other protection when handling tines.

NORMAL TILLING - 24 INCH PATH (See Fig. 16)

- Assemble holes "A" in tine hubs to holes "B" in tine shaft.

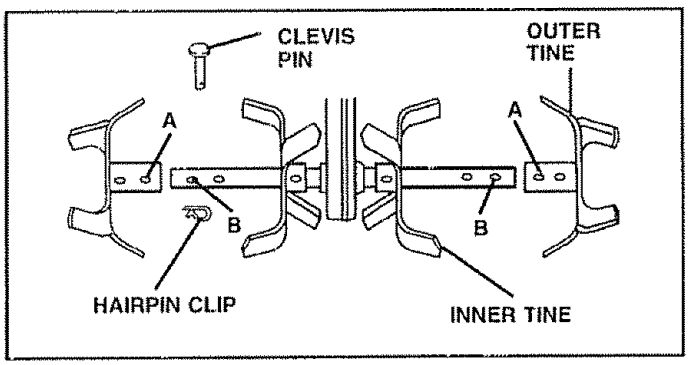

FIG. 16

MID-WIDTH TILLING - 22 INCH PATH (See Fig. 17)

- Assemble holes "A" in tine hubs to holes "C" in tine shaft.

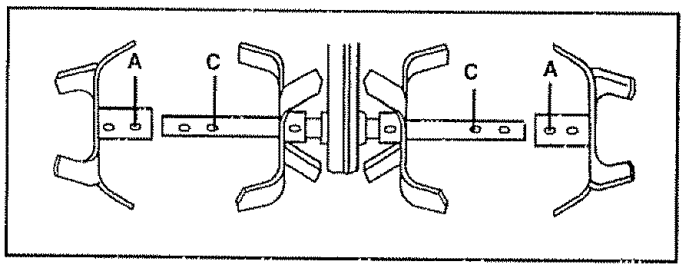

FIG. 17

NARROW TILLING/CULTIVATING - 12-3/4 INCH PATH (See Fig. 18)

- Remove outer tines.

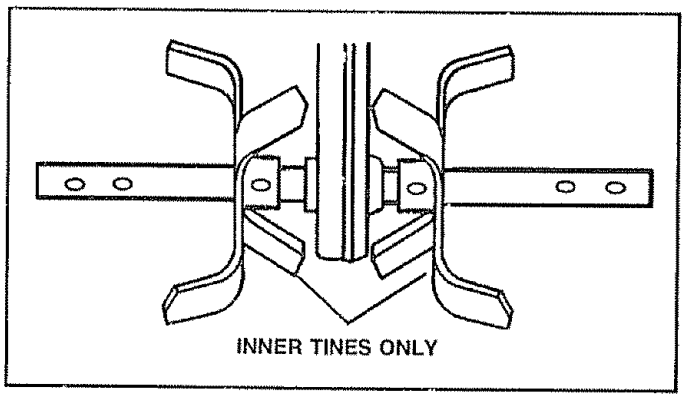

FIG. 18

NOTE: When reassembling outer tines, be sure right tine assembly (marked "R") and left tine assembly (marked "L") are mounted to correct side of tine shaft.

TINE OPERATION CHECK (See Fig. 19)

WARNING: Disconnect spark plug wire from spark plug to prevent starting while checking tine operation.

For proper tine operation, tine control lever must be against control body and all slack removed from inner wire of control cable when control is in the "OFF" (up) position.

If lever and cable are loose, loosen cable clip at lower end of cable. Pull up on cable to remove slack, without extending spring on end of cable, and retighten cable clip.

FINAL CHECK "OFF" POSITION

- With tine control "OFF" (up), push down on handle to raise tines off the ground.
- Slowly pull recoil starter handle while observing tines. Tines should not rotate.
- If tines rotate, inner wire of control cable is too tight which is extending lower spring and engaging tines. Loosen cable clip and push down on cable only enough to relieve spring tension. Tighten cable clip.
- Recheck in "OFF" position and adjust if necessary.

FINAL CHECK "ON" POSITION

- With tine control "ON" (held down to handle) push down on handle to raise tines off the ground.
- Slowly pull recoil starter handle while observing tines. Tines should rotate forward.
- If tines do not rotate, inner wire of control cable is too loose. Loosen cable clip and pull cable up to remove slack and retighten clip.
- Recheck in "ON" position and adjust if necessary.

NOTE: If "ON" position check required adjustment, re-check "OFF" position adjustment to insure tines do not rotate when control is "OFF" (up).

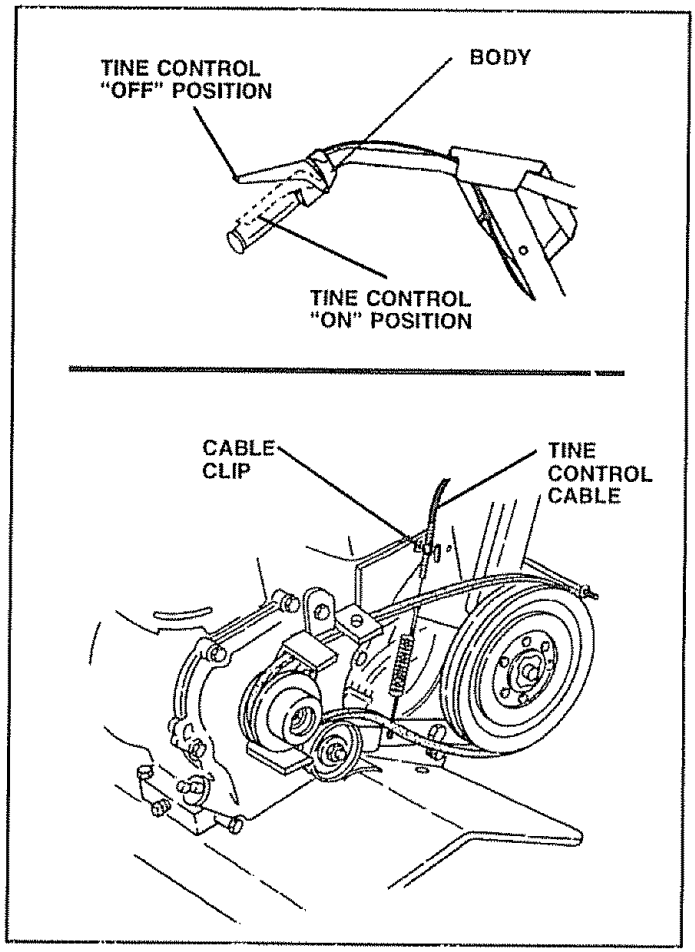

FIG. 19

TO REPLACE V-BELT (See Fig. 20)

Replace V-belt if it has stretched considerably or if it shows cracks or frayed edges.

Belt guard must be removed to service belt. See "TO REMOVE BELT GUARD" in this section of manual.

BELT REMOVAL

- Remove V-belt from transmission pulley first and then from engine pulley.

BELT REPLACEMENT

- Install new V-belt to engine pulley first then to transmission pulley. Be sure belt is positioned on inside groove of both pulleys, inside all belt guides and rests on idler pulley.

CHECK TINE OPERATION

- See "TINE OPERATION CHECK" in this section of manual.

REPLACE BELT GUARD

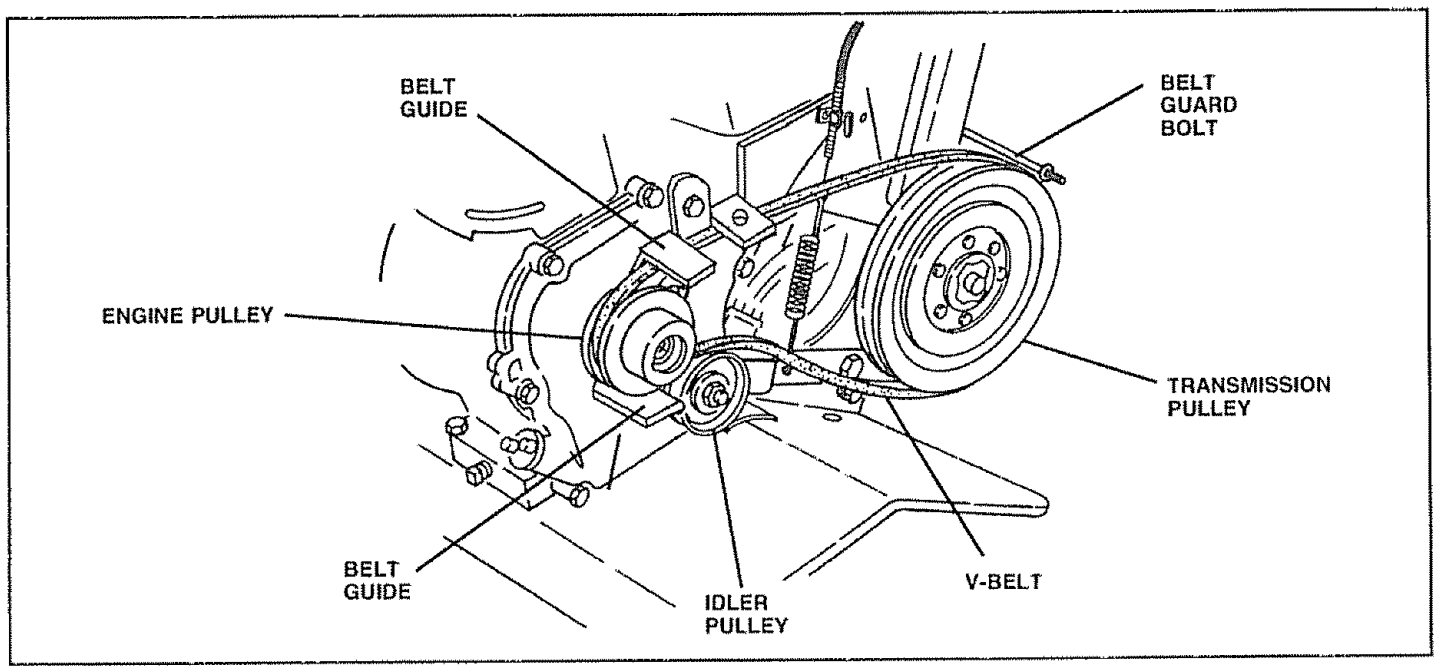

FIG. 20

TO REMOVE BELT GUARD (See Fig. 21)

- Remove cap nut and washer from side of belt guard.
- Loosen (do not remove) tine shield nut on underside of tine shield and cap nut on top of belt guard.
- Pull belt guard out and away from unit.
- Replace belt guard by reversing above procedure. Be sure slot in bottom of belt guard is under head of tine shield bolt and all nuts are tightened securely.

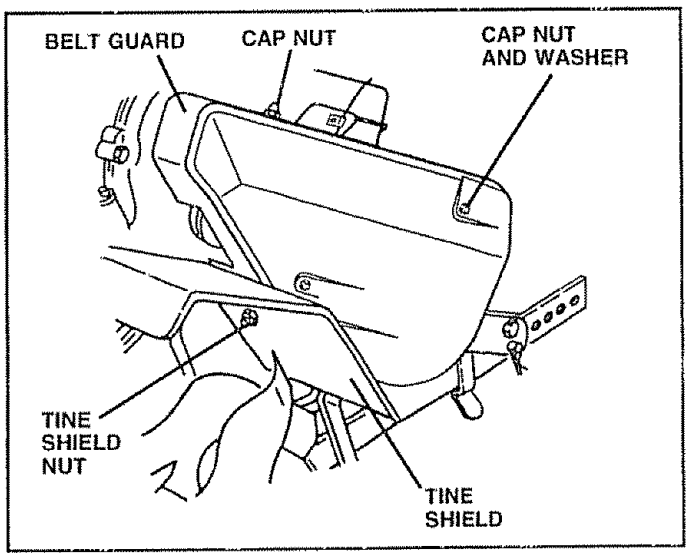

FIG. 21

ENGINE

TO ADJUST CARBURETOR (See Fig. 22)

The carburetor has a high speed fixed jet and has been preset at the factory and adjustment should not be necessary. However, minor adjustments may be required to compensate for differences in fuel, temperature, altitude or load. If the carburetor does need adjustment, proceed as follows.

In general, turning the idle needle valve in (clockwise) decreases the supply of fuel to the engine giving a leaner fuel/air mixture. Turning the needle valve out (counterclockwise) increases the supply of fuel to the engine giving a richer fuel/air mixture.

IMPORTANT: DAMAGE TO THE NEEDLES AND THE SEATS IN CARBURETOR MAY RESULT IF SCREWS ARE TURNED IN TOO TIGHT.

PRELIMINARY SETTING

- Air cleaner assembly must be assembled to the carburetor when making carburetor adjustments.
- With engine off, turn idle needle valve in (clockwise) closing it finger tight and then turn valve out (counterclockwise) 1-1/2 turns.

FINAL SETTING

- Start engine and allow to warm for five minutes. Make final adjustments with engine running at idle and tine control lever in "OFF" position.
- With throttle control in "SLOW" position, turn idle needle valve in (clockwise) until engine begins to die then turn out (counterclockwise) until engine runs rough. Turn valve to a point midway between those two positions.

IDLE RPM ADJUSTMENT

- To adjust idle RPM, rotate throttle linkage counterclockwise and hold against stop while adjusting idle speed adjusting screw to obtain 1750 RPM. Release throttle linkage.

ACCELERATION TEST

- Move throttle control lever from "SLOW" to "FAST" position. If engine hesitates or dies, turn idle needle valve out (counterclockwise) 1/8 turn. Repeat test and continue to adjust, if necessary, until engine accelerates smoothly.

High speed stop is factory adjusted. Do not adjust or damage may result.

IMPORTANT: NEVER TAMPER WITH THE ENGINE GOVERNOR, WHICH IS FACTORY SET FOR PROPER ENGINE SPEED. OVERSPEEDING THE ENGINE ABOVE THE FACTORY HIGH SPEED SETTING CAN BE DANGEROUS. IF YOU THINK THE ENGINE-GOVERNED HIGH SPEED NEEDS ADJUSTING, CONTACT YOUR NEAREST AUTHORIZED SERVICE CENTER/ DEPARTMENT, WHICH HAS PROPER EQUIPMENT AND EXPERIENCE TO MAKE ANY NECESSARY ADJUSTMENTS.

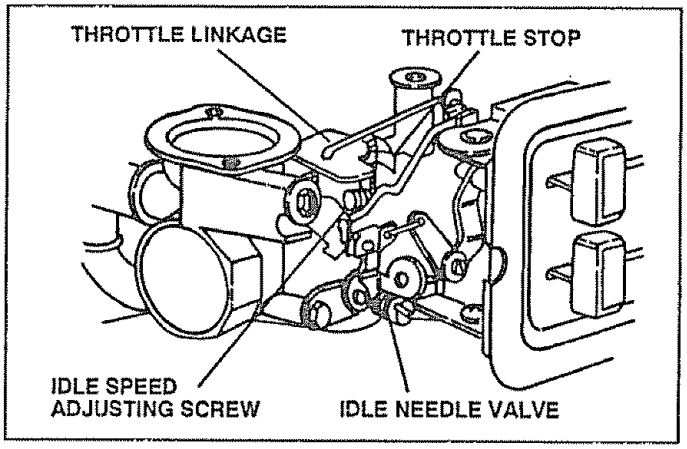

FIG. 22

STORAGE

Immediately prepare your tiller for storage at the end of the season or if the unit will not be used for 30 days or more.

CAUTION: Never store the tiller with gasoline in the tank inside a building where fumes may reach an open flame or spark. Allow the engine to cool before storing in any enclosure.

TILLER

- Clean entire tiller (See "CLEANING" in the Customer Responsibilities section of this manual).
- Inspect and replace belts, if necessary (See belt replacement instructions in the Service and Adjustments section of this manual).
- Lubricate as shown in the Customer Responsibilities section of this manual.
- Be sure that all nuts, bolts and screws are securely fastened. Inspect moving parts for damage, breakage and wear. Replace if necessary.
- Touch up all rusted or chipped paint surfaces; sand lightly before painting.

ENGINE

FUEL SYSTEM

IMPORTANT: IT IS IMPORTANT TO PREVENT GUM DEPOSITS FROM FORMING IN ESSENTIAL FUEL SYSTEM PARTS SUCH AS THE CARBURETOR, FUEL FILTER, FUEL HOSE, OR TANK DURING STORAGE ALSO, EXPERIENCE INDICATES THAT ALCOHOL BLENDED FUELS (CALLED GASOHOL OR USING ETHANOL OR METHANOL) CAN ATTRACT MOISTURE WHICH LEADS TO SEPARATION AND FORMATION OF ACIDS DURING STORAGE. ACIDIC GAS CAN DAMAGE THE FUEL SYSTEM OF AN ENGINE WHILE IN STORAGE.

- Drain the fuel tank.
- Start the engine and let it run until the fuel lines and carburetor are empty.
- Never use engine or carburetor cleaner products in the fuel tank or permanent damage may occur.
- Use fresh fuel next season.

NOTE: Fuel stabilizer is an acceptable alternative in minimizing the formation of fuel gum deposits during storage. Add stabilizer to gasoline in fuel tank or storage container. Always follow the mix ratio found on stabilizer container. Run engine at least 10 minutes after adding stabilizer to allow the stabilizer to reach the carburetor. Do not drain the gas tank and carburetor if using fuel stabilizer.

ENGINE OIL

Drain oil (with engine warm) and replace with clean oil. (See "ENGINE" in the Customer Responsibilities section of this manual).

CYLINDERS

- Remove spark plug.
- Pour 1 ounce (29 ml) of oil through spark plug hole into cylinder.
- Pull starter handle slowly several times to distribute oil.
- Replace with new spark plug.

OTHER

- Do not store gasoline from one season to another.
- Replace your gasoline can if your can starts to rust. Rust and/or dirt in your gasoline will cause problems.
- If possible, store your unit indoors and cover it to give protection from dust and dirt.
- Cover your unit with a suitable protective cover that does not retain moisture. Do not use plastic. Plastic cannot breathe which allows condensation to form and will cause your unit to rust.

IMPORTANT: NEVER COVER TILLER WHILE ENGINE AND EXHAUST AREAS ARE STILL WARM.

TROUBLESHOOTING POINTS

PROBLEM	CAUSE	CORRECTION
Will not start	1. Out of fuel 2. Engine not "CHOKED" properly. 3. Engine flooded. 4. Dirty air cleaner. 5. Water in fuel. 6. Clogged fuel tank. 7. Loose spark plug wire 8. Bad spark plug or improper gap. 9. Carburetor out of adjustment	1. Fill fuel tank. 2. See "TO START ENGINE" in the Operation section. 3. Wait several minutes before attempting to start. 4. Clean or replace air cleaner cartridge. 5. Drain fuel tank and carburetor, and refill tank with fresh gasoline. 6. Remove fuel tank and clean. 7. Make sure spark plug wire is seated properly on plug. 8. Replace spark plug or adjust gap. 9. Make necessary adjustments.
Hard to start	1. Throttle control not set properly. 2. Dirty air cleaner. 3. Bad spark plug or improper gap. 4. Stale or dirty fuel. 5. Loose spark plug wire. 6. Carburetor out of adjustment.	1. Place throttle control in "FAST" position. 2. Clean or replace air cleaner cartridge. 3. Replace spark plug or adjust gap. 4. Drain fuel tank and refill with fresh gasoline. 5. Make sure spark plug wire is seated properly on plug. 6. Make necessary adjustments.
Loss of power	1. Engine is overloaded. 2. Dirty air cleaner. 3. Low oil level/dirty oil. 4. Faulty spark plug. 5. Oil in fuel. 6. Stale or dirty fuel. 7. Water in fuel. 8. Clogged fuel tank. 9. Spark plug wire loose. 10. Dirty engine air screen. 11. Dirty/clogged muffler. 12. Carburetor out of adjustment. 13. Poor compression.	1. Set depth stake and wheels for shallower tilling. 2. Clean or replace air cleaner cartridge. 3. Check oil level/change oil. 4. Clean and regap or change spark plug. 5. Drain and clean fuel tank and refill, and clean carburetor. 6. Drain fuel tank and refill with fresh gasoline. 7. Drain fuel tank and carburetor, and refill tank with fresh gasoline. 8. Remove fuel tank and clean. 9. Connect and tighten spark plug wire. 10. Clean engine air screen. 11. Clean/replace muffler. 12. Make necessary adjustments. 13. Contact an authorized service center/department.
Engine overheats	1. Low oil level/dirty oil. 2. Dirty engine air screen. 3. Dirty engine. 4. Partially plugged muffler. 5. Improper carburetor adjustment.	1. Check oil level/change oil. 2. Clean engine air screen. 3. Clean cylinder fins, air screen, muffler area. 4. Remove and clean muffler. 5. Adjust carburetor to richer position.
Excessive bounce/ difficult handling	1. Ground too dry and hard. 2. Wheels and depth stake incorrectly adjusted.	1. Moisten ground or wait for more favorable soil conditions. 2. Adjust wheels and depth stake.
Soil balls up or clumps	1. Ground too wet.	1. Wait for more favorable soil conditions.
Engine runs but tiller won't move	1. Tine control is not engaged. 2. V-belt not correctly adjusted. 3. V-belt is off pulley(s).	1. Engage tine control. 2. Inspect/adjust V-belt. 3. Inspect V-belt.
Engine runs but labors when tilling	1. Tilling too deep. 2. Throttle control not properly adjusted. 3. Carburetor out of adjustment.	1. Set depth stake for shallower tilling. 2. Check throttle control setting. 3. Make necessary adjustments.

REPAIR PARTS

5 HP 24" TILLER - - MODEL NUMBER 917.298353

HANDLE ASSEMBLY

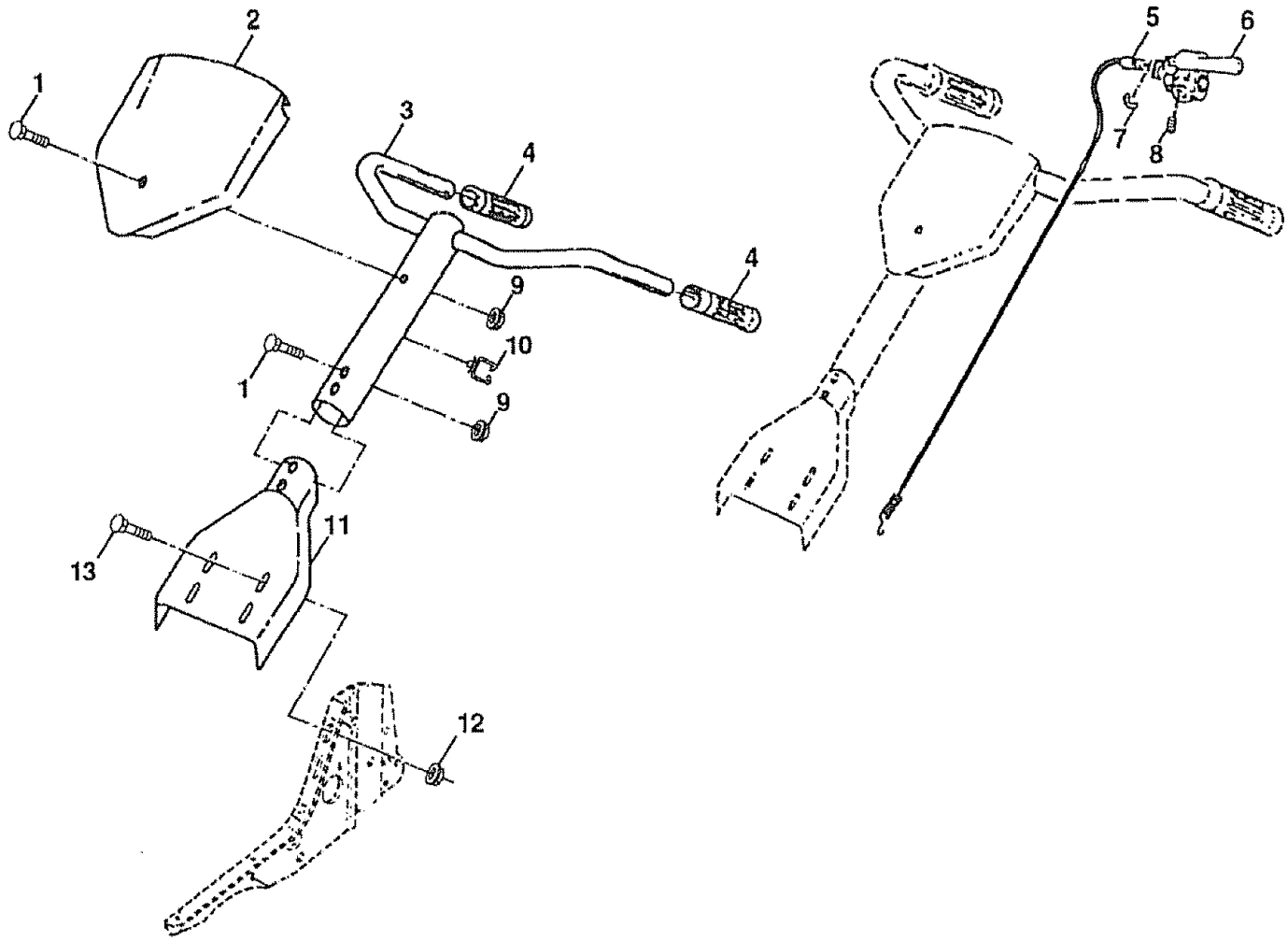

KEY NO.	PART NO.	DESCRIPTION
1	STD533125	* Bolt, Carriage 5/16-18 UNC x 2-3/8 Gr. 5
2	137118	Panel, Control
3	110512X	Assembly, Handle Column
4	110632X	Grip, Handle
5	3066J	Cable, Tine Control
6	2635J	Lever, Control, Tine
7	12000027	Ring, Clip
8	23200405	Screw, Set
9	73970500	Locknut, Flange 5/16-18 UNC
10	121145X	Clip, Cable
11	110514X	Assembly, Panel and Tube
12	98000129	Nut, Flange
13	STD533107	* Bolt, Carriage 5/16-18 x 3/4

*STANDARD HARDWARE — PURCHASE LOCALLY

NOTE: All component dimensions given in U.S. inches. 1 inch = 25.4 mm

REPAIR PARTS

5 HP 24" TILLER - - MODEL NUMBER 917.298353

BELT GUARD AND PULLEY ASSEMBLY

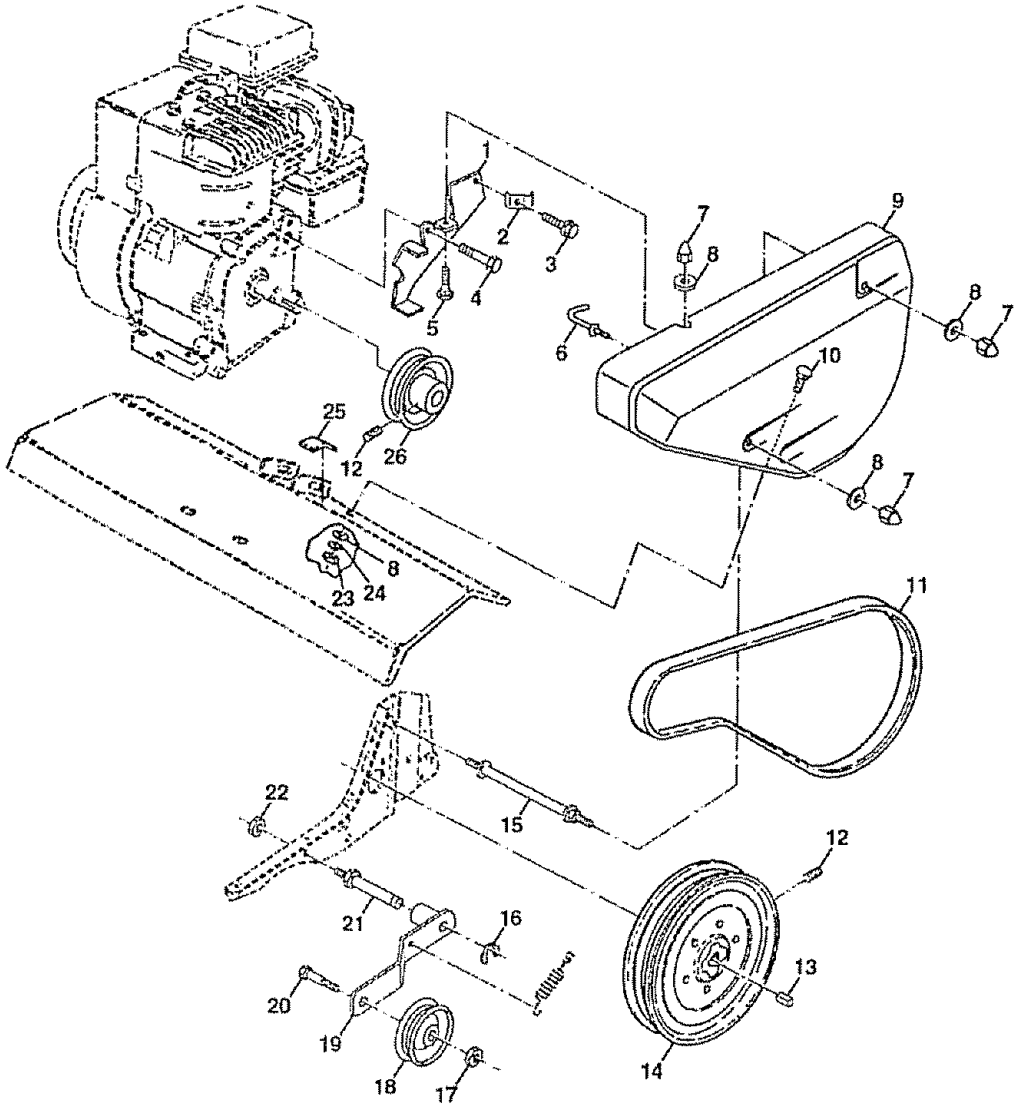

KEY NO.	PART NO.	DESCRIPTION
1	121313X	Bracket, Belt Guard
2	9484R	Clip, Cable
3	86777	Screw, Hex, Washer Hd., Slotted, Thd. Cutting #10-24 x 1/2 Type D
4	74770812	Bolt, Hex 1/2-20 x 3/4
5	STD532505	* Bolt, Carriage 1/4-20 x 1/2
6	121463X	Keeper, Belt
7	104213X	Nut, Cap 1/4- 20
8	STD551025	* Washer 9/32 x 5/8 x 16 Ga.
9	131158X417	Guard, Belt
10	72140405	Bolt, Carriage 1/4-20 x 5/8
11	9180R	V-Belt
12	23230506	* Screw, Set , Socket, Headless
13	2649M	Key, Square
14	9175R	Pulley, Transmission
15	110528X	Bolt, Belt Guard
16	12000036	Ring, Klip
17	STD541237	* Nut, Hex, Jam 3/8-16
18	9178R	Pulley, Idler
19	674A30	Arm, Idler
20	STD523712	* Bolt, Hex 3/8-16 x 1-1/4
21	106968X	Shaft, Idler Arm
22	73350500	Nut, Hex, Jam 5/16-18
23	STD541025	* Nut, Hex 1/4-20
24	STD551125	* Washer, Lock 1/4
25	109227X	Pad, Idler
26	130812	Pulley, Engine

*STANDARD HARDWARE—PURCHASE LOCALLY

NOTE: All component dimensions given in U.S. inches. 1 inch = 25.4 mm

REPAIR PARTS

5 HP 24" TILLER - - MODEL NUMBER 917.298353

WHEEL AND DEPTH STAKE ASSEMBLY

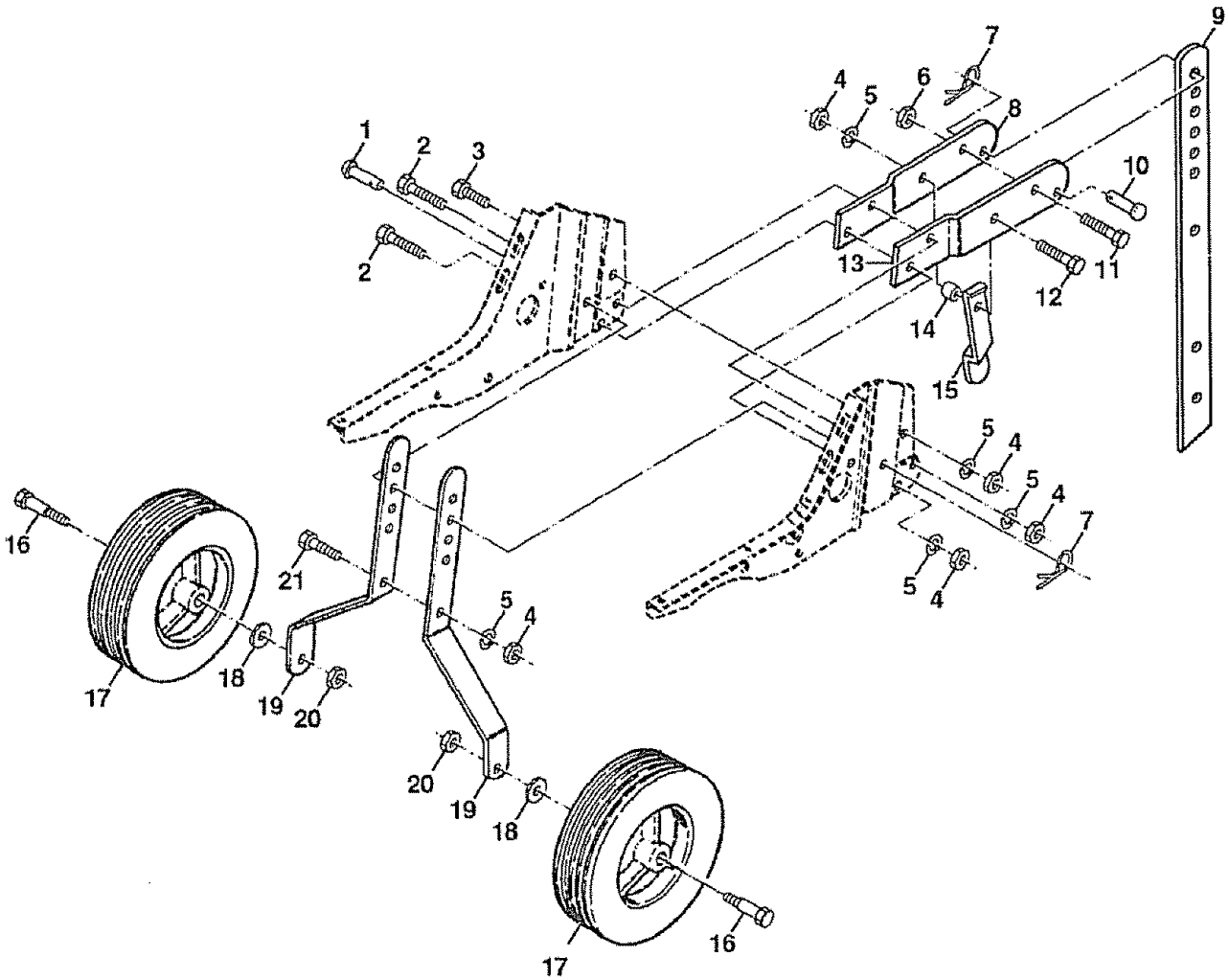

KEY NO.	PART NO.	DESCRIPTION
1	9194R	Pin, Clevis
2	74760520	Bolt, Hex 5/16-18 x 1-1/4
3	STD523107	* Bolt, Hex 5/16-18 x 3/4
4	STD541031	* Nut, Hex 5/16-18
5	STD551131	* Washer, Lock 5/16
6	STD541537	* Locknut 3/8-24
7	4921H	Clip, Hairpin
8	1952J	Support, Depth Stake, R.H.
9	122233X	Stake, Depth
10	326J	Pin, Clevis
11	STD623715	* Bolt, Hex 3/8-24 x 1-1/2 Gr. 5

KEY NO.	PART NO.	DESCRIPTION
12	74760524	Bolt, Hex 5/16-18 x 1-1/2 Gr. 2
13	1951J	Support, Depth Stake, L.H.
14	120958X	Washer
15	5388J	Spring, Stake
16	121117X	Bolt, Shoulder
17	127832	Wheel
18	STD551037	* Washer 13/32 x 13/16 x 11 Ga.
19	9190R	Bracket, Wheel
20	STD541437	* Locknut, Crown 3/8-16
21	74760516	Bolt, Hex 5/16-18 x 1

*STANDARD HARDWARE — PURCHASE LOCALLY

NOTE: All component dimensions given in U.S. inches.
1 inch = 25.4 mm

REPAIR PARTS

5 HP 24" TILLER - - MODEL NUMBER 917.298353

TINE ASSEMBLY

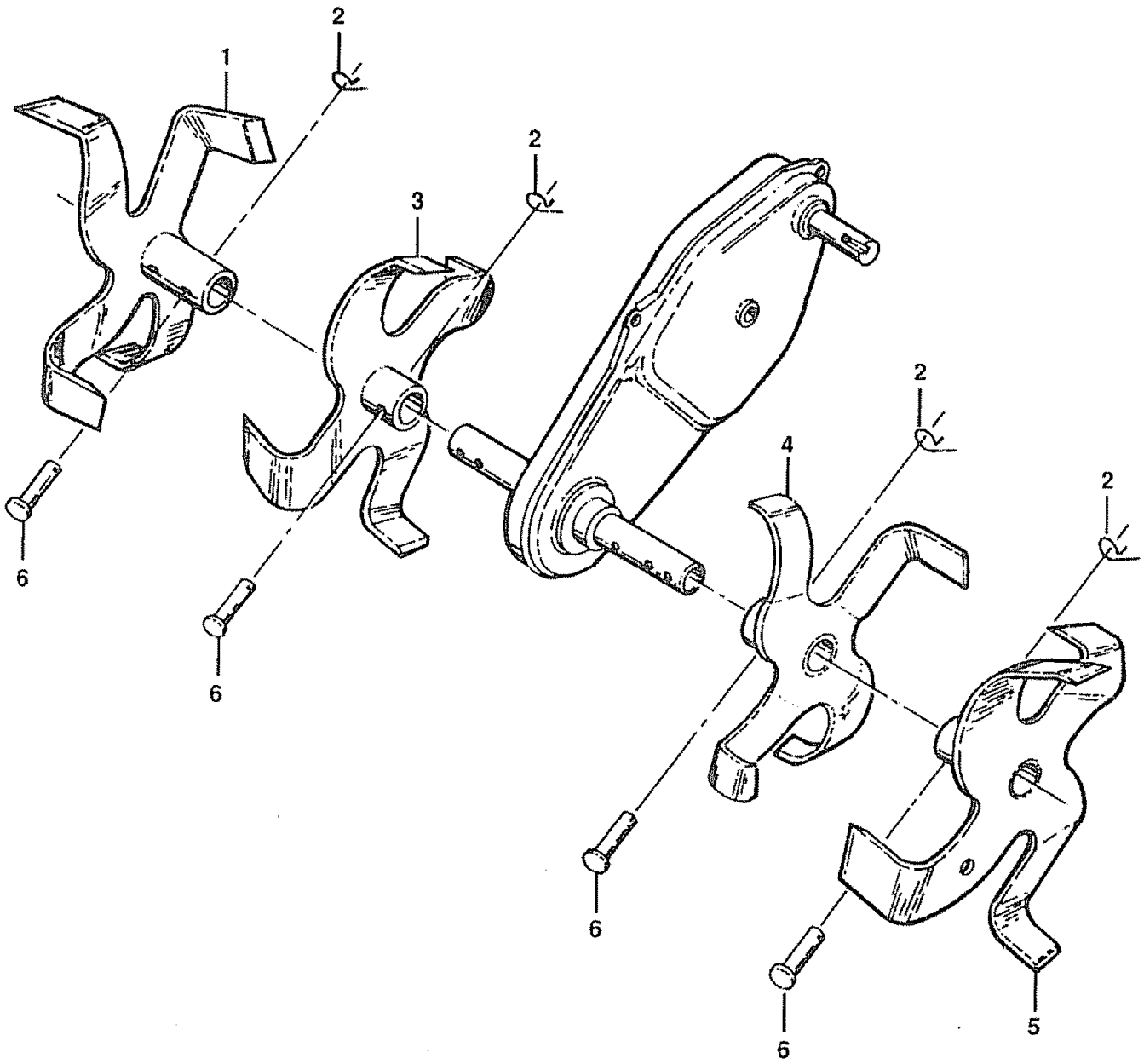

KEY NO.	PART NO.	DESCRIPTION
1	674A66	Tine, Outer, R.H.
2	3146R	Clip, Hairpin
3	674A64	Tine, Inner, R.H.
4	674A63	Tine, Inner, L.H.
5	674A65	Tine, Outer, L.H.
6	4929H	Pin, Clevis

REPAIR PARTS

5 HP 24" TILLER - - MODEL NUMBER 917.298353

TRANSMISSION

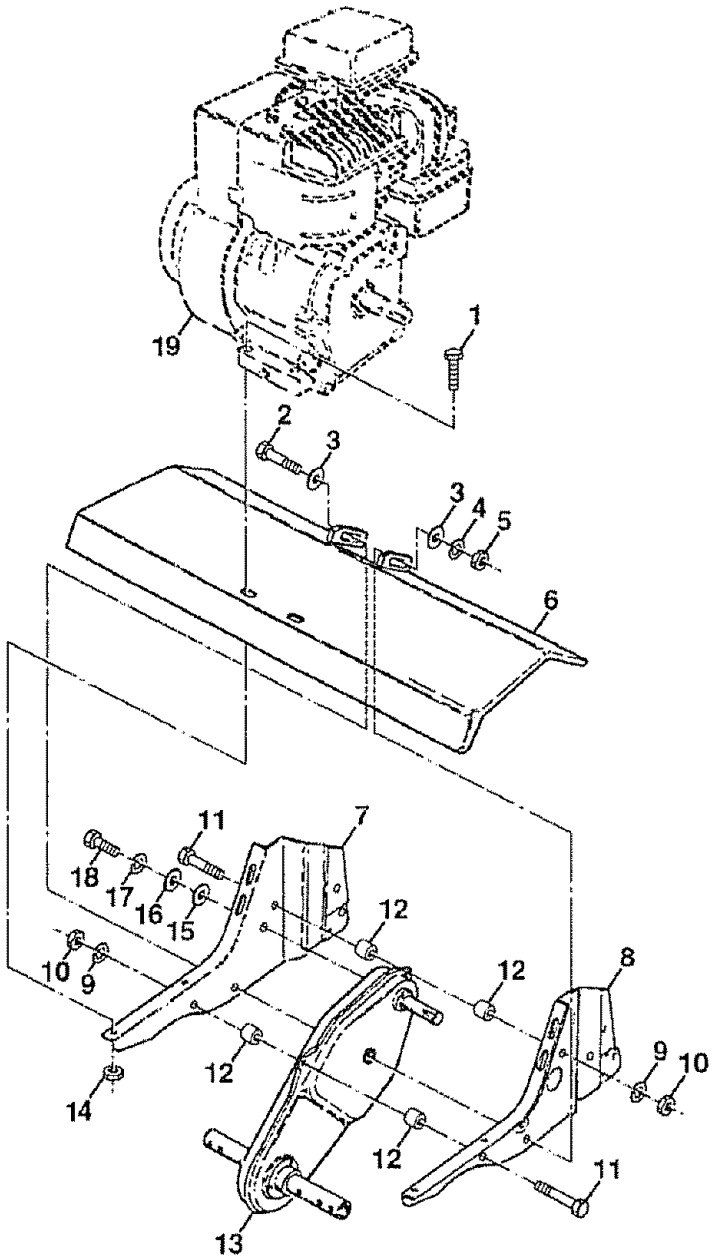

KEY NO.	PART NO.	DESCRIPTION
1	74760524	Bolt, Hex 5/16-18 x 1-1/2 Gr. 2
2	STD623732	* Bolt, Hex 3/8-24 x 3-1/4 Gr. 5
3	STD551037	* Washer 13/32 x 13/16 x 11
4	STD551137	* Washer, Lock 3/8
5	STD541537	Locknut 3/8-24
6	9056R417	Shield, Tine
7	1949J	Bracket, Engine, R.H.
8	110519X	Bracket, Engine, L.H.
9	STD551131	* Washer, Lock 5/16
10	STD541031	* Nut, Hex 5/16-18
11	74760544	Bolt, Hex 5/16-18 x 2-3/4
12	9173R	Spacer, Split
13	126669X	Transmission
14	STD541431	* Nut, Keps 5/16-18 UNC
15	19091412	Washer 9/32 x 7/8 x 12 Ga.
16	19092016	Washer 9/32 x 1-1/4 x 16 Ga.
17	STD551125	* Washer, Lock 1/4
18	74610412	Bolt, Hex 1/4-28 x 3/4 Gr. 5
19	137263	Engine, Briggs & Stratton Model No. 135202 Type 0119-01

*STANDARD HARDWARE — PURCHASE LOCALLY

NOTE: All component dimensions given in U.S. inches. 1 inch = 25.4 mm

REPAIR PARTS

5 HP 24" TILLER - - MODEL NUMBER 917.298353

DECALS

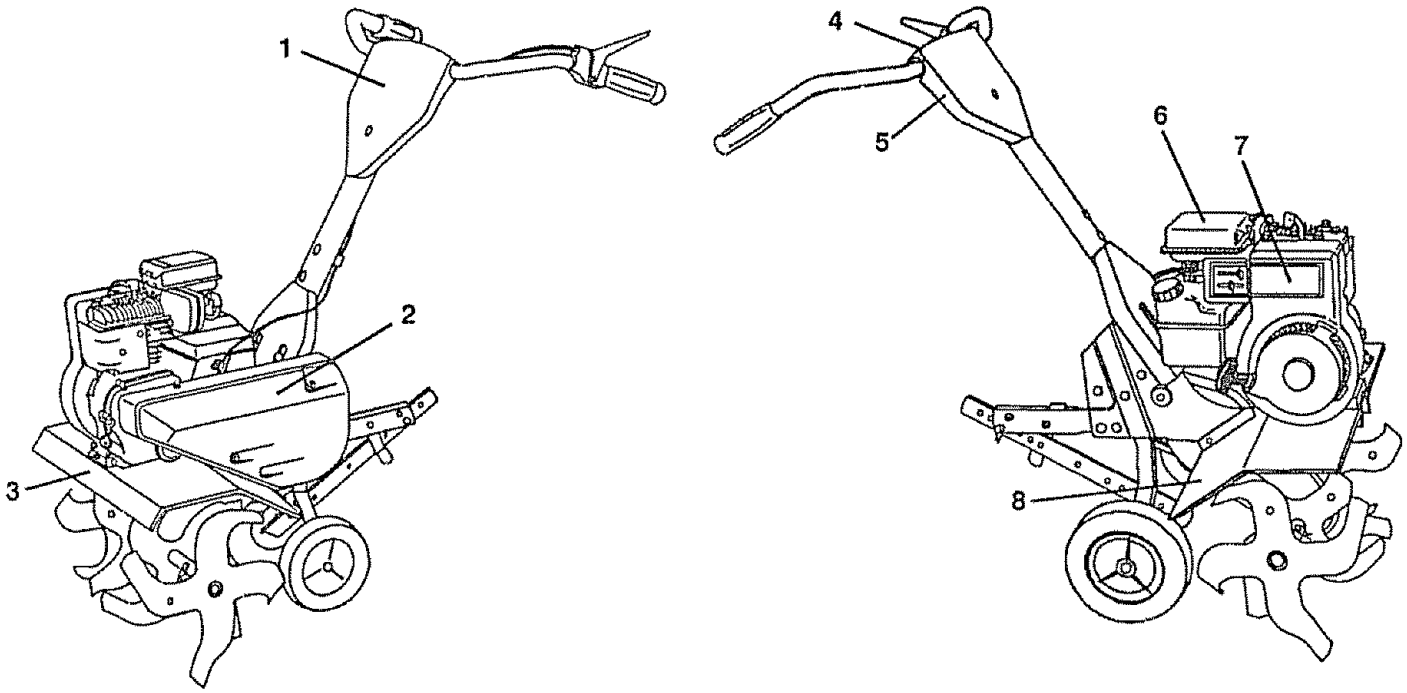

KEY NO.	PART NO.	DESCRIPTION
1	137760	Decal, Logo
2	132606	Decal, Logo
3	127836	Decal, Logo
4	137539	Decal, Caution, Tine Control
5	120431X	Decal, Hand Placement
6	110719X	Decal, Operation and Lubrication
7	132402	Decal, HP
8	120075X	Decal, Warning, Rotating Tines
- -	137873	Manual, Owner's (English)
- -	137874	Manual, Owner's (Spanish)

REPAIR PARTS

5 HP 24" TILLER - - MODEL NUMBER 917.298353

ENGINE, BRIGGS & STRATTON - - MODEL NUMBER 135202, TYPE NO. 0119-01

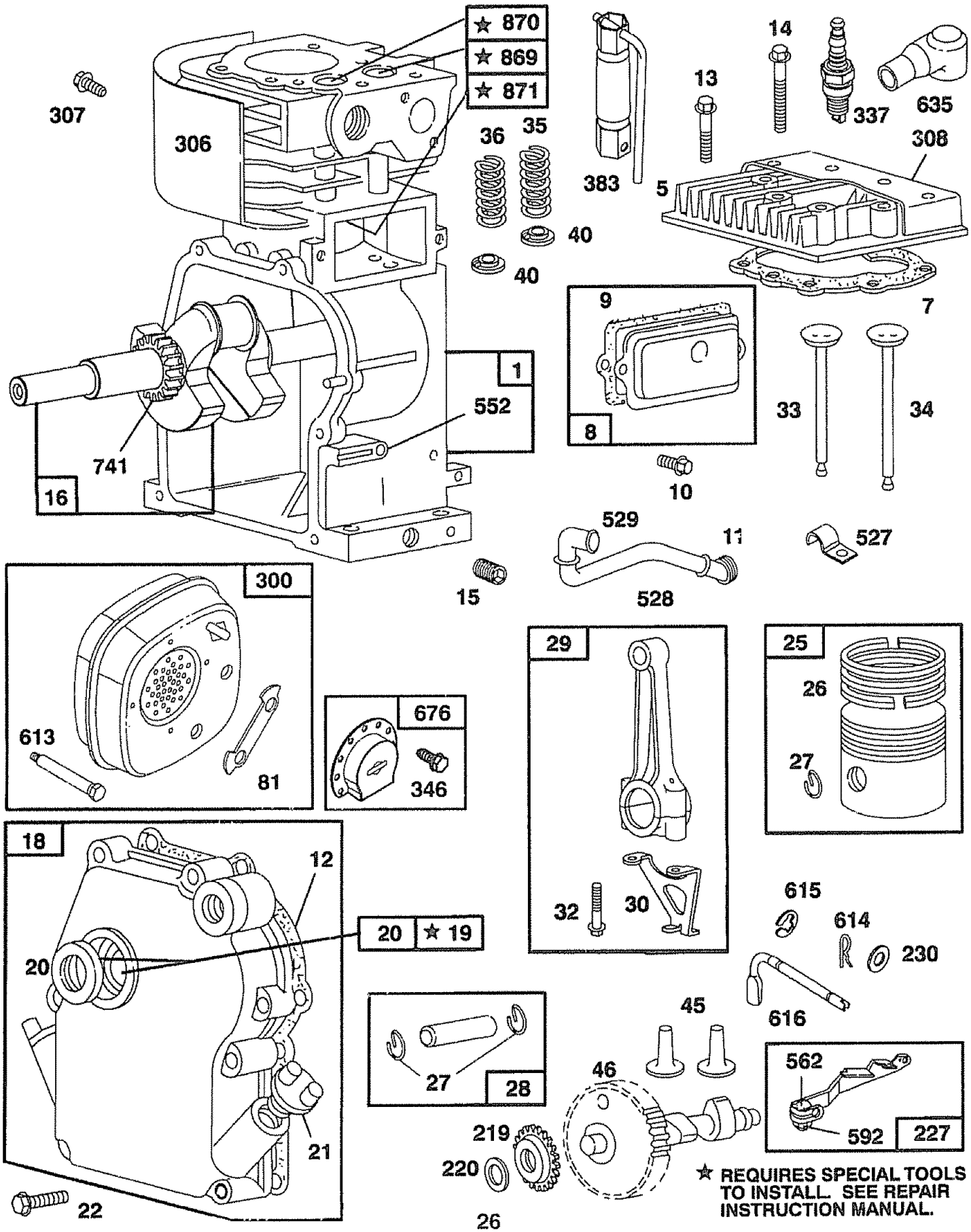

REPAIR PARTS

5 HP 24" TILLER - - MODEL NUMBER 917.298353

ENGINE, BRIGGS & STRATTON - - MODEL NUMBER 135202, TYPE NO. 0119-01

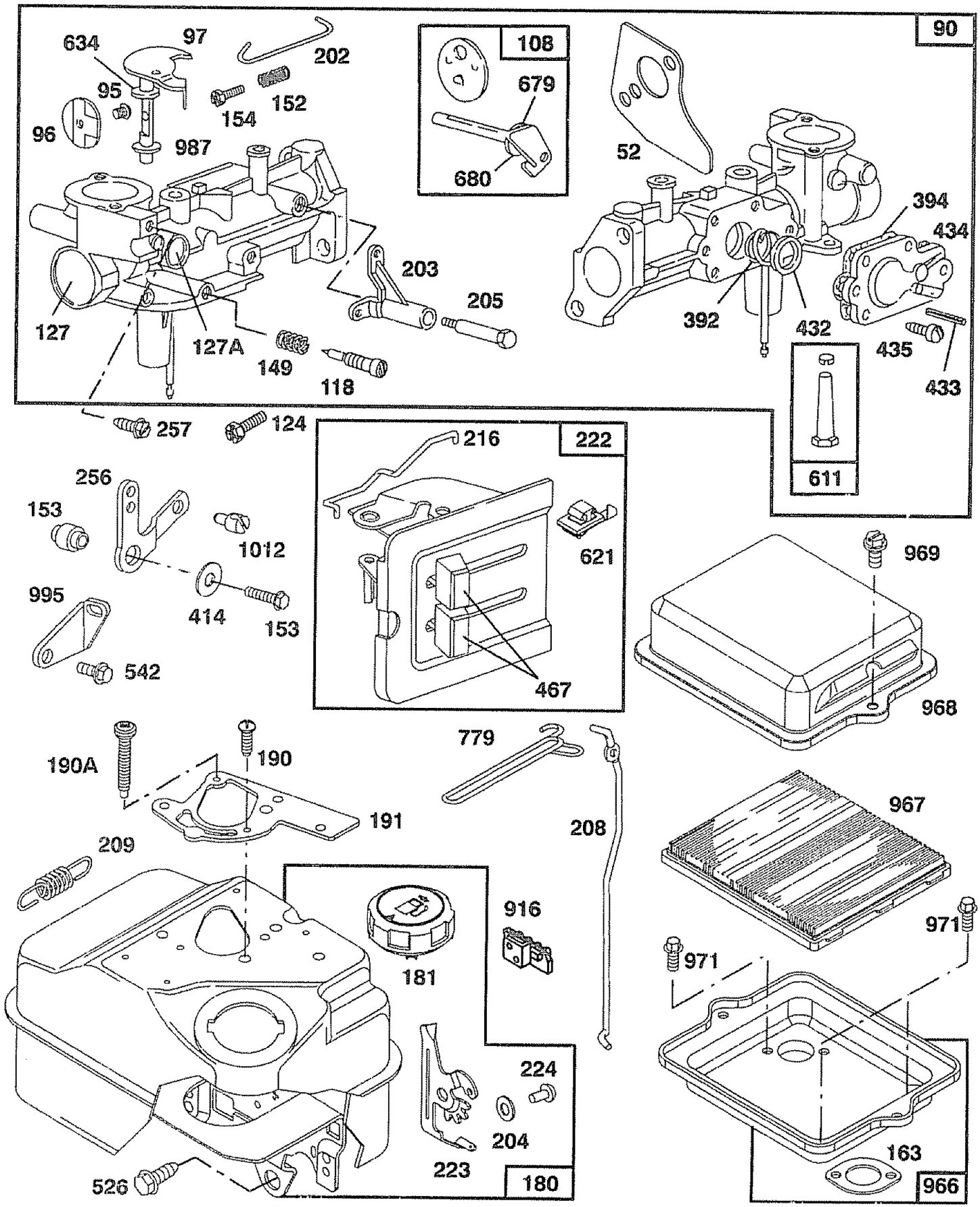

REPAIR PARTS

5 HP 24" TILLER - - MODEL NUMBER 917.298353

ENGINE, BRIGGS & STRATTON - - MODEL NUMBER 135202, TYPE NO. 0119-01

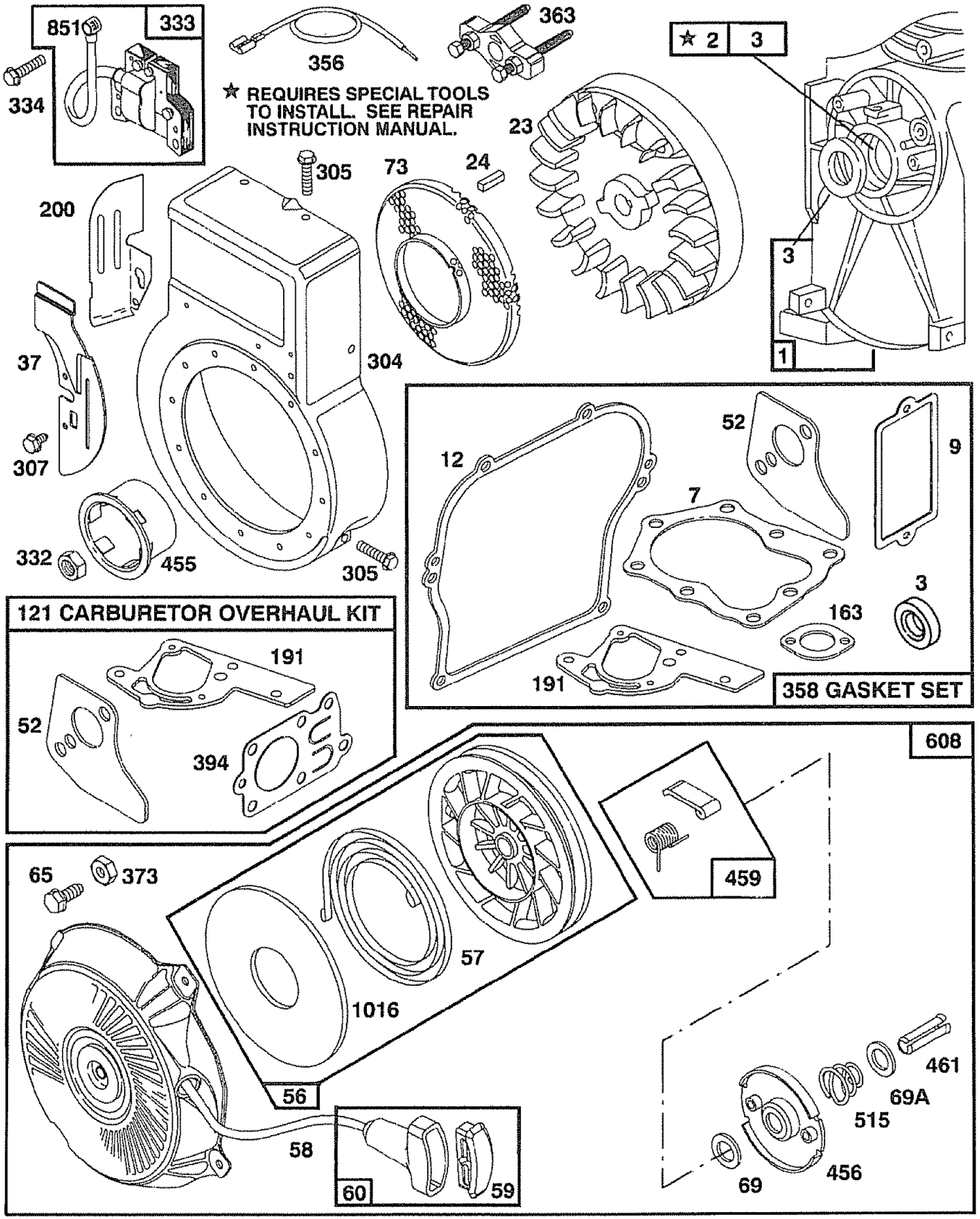

REPAIR PARTS

5 HP 24" TILLER - - MODEL NUMBER 917.298353

ENGINE, BRIGGS & STRATTON - - MODEL NUMBER 135202, TYPE NO. 0119-01

KEY NO.	PART NO.	DESCRIPTION
1	395990	Cylinder Assembly
2	297565	Bushing, Cylinder
3	299819	* Seal, Oil
5	214040	Head, Cylinder
7	272157	* Gasket, Cylinder Head
8	495774	Breather Assembly
9	27549	* Gasket, Valve Cover
10	94621	Screw, Breather Mounting
11	66578	Grommet, Breather Tube
12	270080	* Gasket, Crankcase, Standard .015"
	270125	* Gasket, Crankcase .005" Thick
	270126	* Gasket, Crankcase .009" Thick
13	94221	Screw, Cylinder Head 2-3/32"
14	94679	Screw, Cylinder Head 2-15/32"
15	93448	Plug, Pipe, Hex Socket
	94387	Plug, Oil Drain
16	492088	Crankshaft
	230978	Gear Pin, Crankshaft
18	297602	Cover Assembly, Crankcase
19	495660	Bushing, Crankcase Cover
20	294606	* Seal, Oil
21	66768	Plug, Oil Filler
22	94682	Screw, Cover Mounting
23	297229	Flywheel, Magneto
24	222698	Key, Flywheel
25	298904	Piston Assembly, Standard Size
	298905	Piston Assembly .010" Oversize
	298906	Piston Assembly .020" Oversize
	298907	Piston Assembly .030" Oversize
26	298982	Ring Set, Piston, Standard Size
	299742	Ring Set, Piston, Standard, Chrome
	298983	Ring Set, Piston .010" Oversize
	298984	Ring Set, Piston .020" Oversize
	298985	Ring Set, Piston .030" Oversize
27	26026	Lock, Piston Pin
28	298909	Pin Assembly, Piston, Standard
	298908	Pin Assembly, Piston .005" Over
29	299430	Rod Assembly, Connecting
	390459	Rod Assembly, Connecting .020" Undersize Crankpin Bore
30	221890	Dipper, Connecting Rod
32	94745	Screw, Connecting Rod
33	211119	Valve, Exhaust
34	261044	Valve, Intake
35	260552	Spring, Intake Valve
36	26478	Spring, Exhaust Valve
37	222443	Guard, Flywheel
40	93312	Retainer, Intake Valve and Exhaust Spring
45	260642	Tappet, Valve
46	212733	Gear, Cam
52	271936	*** Gasket, Carburetor Mounting (2)
55	494846	Housing, Rewind Starter
56	493824	Pulley, Rewind Starter
57	262594	Spring, Rewind Starter
58	280406	Rope, Rewind Starter (Cut to Required Length)
59	396892	Insert, Starter Handle
60	393152	Handle, Rewind Starter
65	94686	Screw, Housing Mounting
69	280973	Washer
69A	224322	Washer
73	224632	Screen, Rotating
81	222263	Lock, Screw
90	495426	Carburetor Assembly
95	93499	Screw, Throttle Valve to Shaft
96	223793	Throttle, Carburetor
97	490048	Shaft and Lever, Throttle
108	491177	Valve and Shaft Group, Choke
118	231533	Valve, Needle
121	495606	Carburetor Overhaul Kit
124	94616	Screw, Hex Head
127	220352	Plug, Welch
127A	223789	Plug, Welch
149	26336	Spring, Needle Valve
152	260575	Spring, Throttle Adjustment
153	490589	Screw and Collar
154	93527	Screw, Machine, Round Head
163	271935	* Gasket, Air Cleaner Mounting
180	495405	Tank Assembly, Fuel
181	494559	Cap, Fuel Tank
190	94712	Screw, Fuel Tank
190A	94677	Screw, Fuel Tank Mounting 1-3/4"
191	272489	*** Gasket, Fuel Tank to Carburetor
200	223886	Guide, Air
202	262270	Link, Throttle
203	280720	Bell Crank

* Included in Gasket Set (495603)
** Included in Carburetor Overhaul Kit (495606)
*** Included in both Gasket Set (495603), and Carburetor Overhaul Kit (495606)

NOTE: All component dimensions given in U.S. inches
1 inch = 25.4 mm

REPAIR PARTS

5 HP 24" TILLER - - MODEL NUMBER 917.298353

ENGINE, BRIGGS & STRATTON - - MODEL NUMBER 135202, TYPE NO. 0119-01

KEY NO.	PART NO.	DESCRIPTION
204	222962	Bushing, Governor Lever, Flat
205	231520	Screw, Shoulder
208	262279	Rod, Speed Control
209	262283	Spring, Governor
216	262359	Link, Choke
219	494845	Gear, Governor
220	221551	Washer, Thrust
222	490649	Panel, Control
223	223455	Lever, Governor Control
224	93491	Rivet, Governor Control Lever Mounting
227	490374	Lever Assembly, Governor
230	222450	Washer, Governor Lever
256	223813	Crank, Bell
257	93543	Screw, Sems, Hex Head
300	393615	Muffler, Exhaust
304	495759	Housing, Blower
305	94619	Screw, Blower Housing Mounting
306	221511	Shield, Cylinder
307	94680	Screw, Cylinder Shield
308	224738	Cover, Cylinder Head
332	92284	Nut, Flywheel
333	397358	Armature Group
334	93414	Screw, Armature Mounting
337	802592	Plug, Spark
346	93705	Screw, Sems
356	398808	Wire, Ground
358	495603	Gasket Set
363	19069	Flywheel Puller
373	92987	Nut, Hex
383	89838	Wrench, Spark Plug
392	262328	Spring, Fuel Pump Diaphragm
394	272538	** Diaphragm
414	220982	Washer
432	221377	Cap, Spring
433	93265	Pin, Diaphragm Cover
434	214021	Cover, Diaphragm
435	93141	Screw, Diaphragm Cover
455	224250	Cup, Starter
456	224321	Retainer
459	492833	Pawl, Starter
461	262626	Pin, Spring
467	280715	Knob, Control
515	262625	Spring
526	94659	Screw, Sems, Tank Bracket Mount.
527	223786	Clamp, Breather Tube
528	231550	Tube, Breather
529	67838	Grommet, Breather Tube
542	93572	Screw
552	231079	Bushing, Governor Crank
562	92613	Bolt, Governor Lever
592	231082	Nut, Hex
608	495766	Starter Assembly, Rewind
611	391813	Fuel Pipe and Clip Assembly
613	93935	Screw, Hex Head, Shoulder
614	93306	Pin, Cotter
615	93307	Retainer, E-Ring
616	231077	Crank, Governor
621	396847	Switch, Stop
634	271853	Washer, Throttle Shaft, Foam
635	66538	Elbow, Spark Plug
676	393757	Deflector, Exhaust, Side Outlet
679	270382	Washer, Foam
680	221839	Washer, Brass
741	261696	Gear, Timing
779	262570	Link, Speed Control
851	221798	Cable Terminal, Ignition
869	211787	Seat, Intake Valve, Standard
870	211172	Seat, Exhaust Valve, Standard
871	262001	Guide, Exhaust Valve
	63709	Guide, Intake Valve
916	280321	Rack, Gear Control
966	492797	Base, Air Cleaner
967	491588	Filter, Air Cleaner
968	495357	Cover, Air Cleaner
969	490073	Screw, Air Cleaner
971	94018	Screw, Hex Head
987	398970	Seal, Throttle Shaft
995	223887	Lever, Bracket Assembly
1012	490507	Retainer, Link
1016	224278	Spacer

RPM Settings: Low Speed: 1750-1950
High Speed: 3400-3600

* Included in Gasket Set (495603)
** Included in Carburetor Overhaul Kit (495606)
*** Included in both Gasket Set (495603), and Carburetor Overhaul Kit (495606)

NOTE: All component dimensions given in U.S. inches
1 inch = 25.4 mm

SERVICE NOTES

SEARS

OWNER'S MANUAL

CRAFTSMAN®

5.0 HP 24 INCH TINE WIDTH FRONT TINE TILLER

MODEL NO. 917.298353

Each tiller has its own model number. Each engine has its own model number.

The model number for your tiller will be found on a plate attached to the right hand engine bracket.

The model number for your engine will be found on the blower housing of the engine.

All parts listed herein may be ordered from any Sears, Roebuck, and Co. Service Center/Department and most Retail Stores.

HOW TO ORDER REPAIR PARTS

WHEN ORDERING REPAIR PARTS, ALWAYS GIVE THE FOLLOWING INFORMATION:

- **PRODUCT - FRONT TINE TILLER**
- **MODEL NUMBER - 917.298353**
- **ENGINE MODEL NUMBER - 135202, TYPE NUMBER 0119-01**
- **PART NUMBER**
- **PART DESCRIPTION**

Your Sears merchandise has added value when you consider Sears has service units nationwide staffed with Sears trained technicians... professional technicians specifically trained to insure that we meet our pledge to you, we service what we sell.

Sears, Roebuck and Co., Hoffman Estates, IL 60179 U.S.A.

137873 7.7.93

PRINTED IN THE U.S.A.